No. 636,577. Patented Nov. 7, 1899.

H. W. SMITH & W. J. BAUGHMAN.

ELECTRIC APPARATUS.

(Application filed Apr. 10, 1899.)

(No Model.) 2 Sheets—Sheet 1.

Fig. 1.

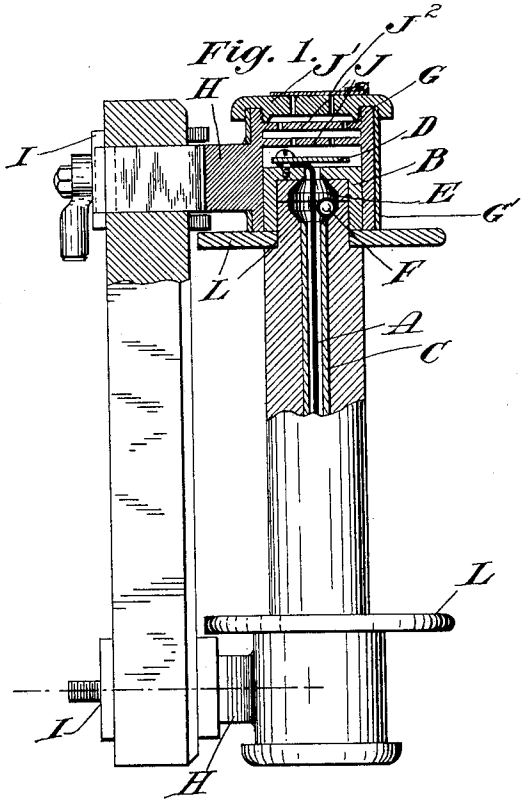

Fig. 3.

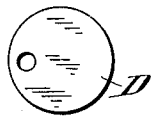

Fig. 2.

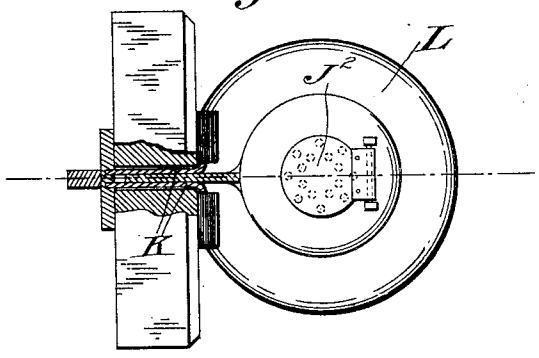

WITNESSES:

E. L. Hackley.

Emmons Stowell

INVENTORS

Herbert W. Smith.

William J. Baughman.

BY

R. C. Mitchell.

ATTORNEY

THE NORRIS PETERS CO., PHOTO-LITHO., WASHINGTON, D. C.

No. 636,577. Patented Nov. 7, 1899.

H. W. SMITH & W. J. BAUGHMAN.

ELECTRIC APPARATUS.

(Application filed Apr. 10, 1899.)

(No Model.) 2 Sheets—Sheet 2.

Fig. 4.

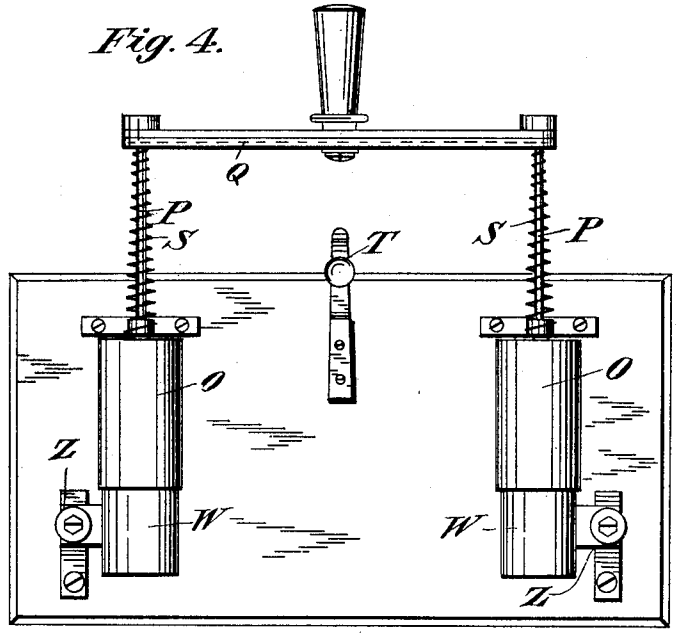

Fig. 5.

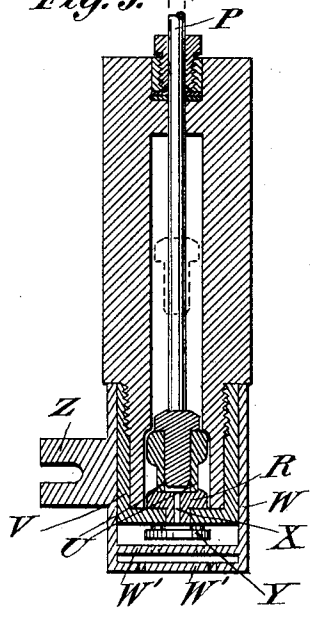

Fig. 6.

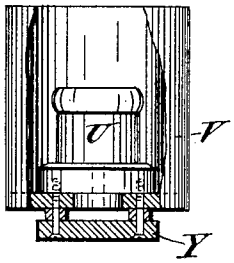

Fig. 7.

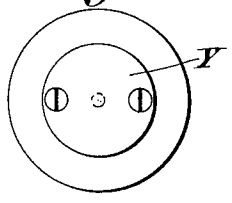

Fig. 8.

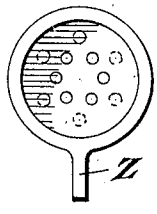

Fig. 9.

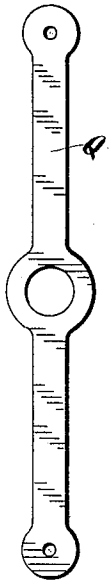

Fig. 10.

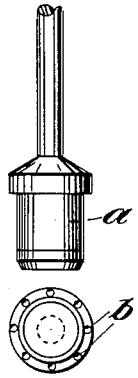

WITNESSES:

Geo. T. Hackley.

Emmett R. Newell

INVENTORS

Herbert W. Smith.

William J. Baughman.

BY

R. Cunliffe

ATTORNEY

THE NORRIS PETERS CO., PHOTO-LITHO., WASHINGTON, D. C.

UNITED STATES PATENT OFFICE.

HERBERT W. SMITH AND WILLIAM J. BAUGHMAN, OF PITTSFIELD, MASSACHUSETTS, ASSIGNORS TO THE STANLEY ELECTRIC MANUFACTURING COMPANY, OF SAME PLACE.

ELECTRIC APPARATUS.

SPECIFICATION forming part of Letters Patent No. 636,577, dated November 7, 1899.

Application filed April 10, 1899. Serial No. 712,377. (No model.)

To all whom it may concern:

Be it known that we, HERBERT W. SMITH and WILLIAM J. BAUGHMAN, citizens of the United States, residing at Pittsfield, county of Berkshire, State of Massachusetts, have invented certain new and useful Improvements in Electric Apparatus, of which the following is a full, clear, and exact description.

Our invention relates to electrical apparatus—such as fuse-holders, switches, and the like—and has for its object to provide a safer and more efficient construction and to lessen or prevent the flashing which occurs when an electric circuit is opened by the blowing of a fuse or the operation of a switch.

Referring to the drawings, Figure 1 is a side elevation, partly in section, showing a fuse-holder embodying our improvement. Fig. 2 is a plan view of the same. Fig. 3 is a detail view of one part. Fig. 4 is a side elevation of a switch embodying our invention. Fig. 5 is a section of one of the cylinders of the same. Figs. 6, 7, 8, 9, and 10 are detailed views of various portions.

In the drawings, A is a fuse extending from the metallic terminals B through the small bore of the tube C, of fibrite or insulating material, to a similar terminal at the lower end of the holder. The fuse A is fastened to the terminal B by a screw passing through a plate D, (shown in detail in Fig. 3,) said plate extending well over the hole through which the fuse passes, which hole in this embodiment forms an escape-passage from the arcing-chamber. At each end of the tube C is an enlarged opening E, in which there is preferably a small ball F of carbon or other material which is not easily fusible. This ball when the fuse A burns out drops down upon its seat at the lower end of the chamber E, closing the orifice and assisting in quenching the arc. Over the cap-shaped terminals B are slipped other metallic caps or sleeves G, having projections H, which sleeves make electrical connection with the terminals I of the circuit to be protected. The sleeves G are covered with a coating of hard rubber G′ or other like insulating material and have within them air-chambers formed by the one or more plates or partitions J J, of metal, perforated to permit the escape of gas which may be generated upon the blowing of the fuse A. These plates are covered by a cap J′. The two ends of the holder are preferably in all respects similar. The projections H pass between the spring-pressed jaws K K of the terminals I, so as to be capable of easy insertion and extraction, the fuse-holder being in this manner easily detachable from both terminals by a single pull. It will be seen that by this construction the fuse-holder can be disconnected from the terminals I and that the caps G G can be pulled off the ends, leaving exposed the terminals B, to which the fuse is connected. A fuse can then be easily placed in position and secured, and the parts having been restored the device can be thrust quickly into proper contact with the circuit-terminals.

When the fuse A is destroyed, it will normally melt first at about the middle of the central passage or arcing-space in the tube C, and the arc resulting appears to cause a slight explosion, which throws both the fused metal and the balls F toward the farther ends of the cavities E. The balls immediately close the central passages. The rapid chilling of the molten metal due to the metallic ends, with or without the action of the balls, results in an almost instantaneous suppression of the arc, so that practically no noise is to be heard when a fuse blows, and practically no flash is observable. There may be a slight smoke due to the oxidation of the fused metal and a slight arcing, but the oxid vapor is entirely chilled and condensed in passing around the spreading and chilling plate D and through the perforated metallic plates J J, so that no appearance of flame reaches the outside.

We have found that under most ordinary conditions the apparatus is sufficient even if the balls F and the perforated plates J J be omitted, though both are desirable, the balls allowing the breaking of the circuit on a higher voltage than can be done without them, other things being equal, and the perforated plates serving to mask or kill more completely any arc that tends to be developed inside.

The circular disks L L, of insulating ma-

terial, serve to more completely separate the terminals of the circuit and to prevent the danger of arcing across the terminals outside the tube and lessen the risk of the operator's hand coming into contact with a line-terminal. The central portion between these disks may be made of glass or other transparent material, so that it may be easily determined by the eye whether or not the fuse has been blown without opening the device. The flag J^2, pivoted on the cap J', is an additional signal, being thrown into an upright position by the explosion accompanying the blowing of the fuse.

Referring now more particularly to Figs. 4 to 10, inclusive, which show our improvement applied to a switch, O O represent two cylinders of insulating material, within which are two metallic rods P P, electrically connected by the bar Q and capable of being forced into contact with the two circuit-terminals R, as shown in Fig. 5, the two cylinders being of the same construction. When in this position, the springs S S are compressed and the parts are held in contact by the catch T. When the catch T is released, the rod flies up under the influence of the springs and the circuit is broken. In both cylinders O O at this time arcs tend to form at the points where the breaks occur and to create flashes. To lessen the arc and prevent the flash, a similar construction to that heretofore described is adopted. The circuit-terminals U are mounted upon metallic caps V, which in turn are surmounted by their metallic caps W, having partitions W' W', perforated so as to permit the escape of any gases which may be formed. Through the center of the circuit-terminals U is an opening over which, separated by a slight space, is a spreading-plate Y. It will be seen that any gases or flames which are formed within the cylinder have to pass through the opening X into the air-chamber formed by the cap W and through the perforations in the plates W' W' before they can reach the outer air or be visible, and experience proves that before this occurs the arc is so chilled as to be extinguished. Electrical connection is made with the circuit through the ear Z. The two rods P have at their lower ends enlargements *a*, which fit closely within the terminals U and serve to make a good electrical contact therewith. These enlargements fit quite closely within the bore of the cylinder O and are provided with a slight annulus, through which there are perforations *b*, which tend to check and dissipate any arc which may tend to be forced upward.

It will be obvious that many changes may be made in the construction herein disclosed without departing from the spirit of our invention.

What we claim is—

1. In an electrical apparatus, a pair of terminals, an inclosed arcing-space between the same, an escape-passage therefrom, and a spreading and chilling device over and adjacent to said escape-passage to tend to interrupt the arc.

2. An electrical apparatus having a pair of terminals, an inclosed arcing-space between the same, an escape-passage therefrom, and a chilling device over said passage and located directly in the path of the flame from the arc, spreading and chilling the same and tending to interrupt the arc.

3. An electrical apparatus having a pair of terminals, an inclosed arcing-space between the same, an escape-passage therefrom, a chilling device located over and close to said escape-passage to tend to interrupt the arc, an inclosed air-chamber connected with said passage and an escape-orifice for said chamber.

4. In an electrical apparatus having a vertical elongated arcing-space, a pair of terminals, a vertical fuse in said arcing-space electrically connected with said terminals, a gravity-actuated stop supported by said vertical fuse and a seat for said stop surrounding said arcing-space.

5. In an electrical apparatus, the combination of a tube of insulating material, binding-posts at the ends thereof, a fuse passing through said tube and connected to said binding-posts, and a chilling device over the end of said tube to tend to interrupt the arc.

6. In an electrical apparatus, a tube constituting an arcing-space, a terminal at one end thereof, a cap covering said end of said tube and forming a chamber connecting with said arcing-space, said cap having a series of diaphragms forming one or more chambers, said diaphragms being perforated to check the escape of the product of combustion from said arcing-space.

7. An electric fuse-holder having two removable caps in electrical connection with the terminals to which the fuse is connected, said caps being provided with lateral projections in electrical connection with said fuse and vents leading to the outer air, in combination with spring-jawed circuit-terminals, engaging with said projections and holding the fuse-holder in position.

8. In combination a fuse, an inclosing receptacle having a vent, and a flag normally over said vent and adapted to be moved to another position on the blowing of said fuse to act as a signal, and means to automatically retain said flag in its said other position.

9. In an electric apparatus, a stationary terminal embracing a spring-socket, a removable portion embracing a tube of insulating material having an elongated arcing-space therein, a binding-post near each end of said space, a length of fuse passing through said space and attached to said binding-posts, said tube having a removable cap over one end thereof, and a plug extending laterally from said cap and constituting a terminal in electrical connection with one of said binding-posts, said plug being adapted to enter said spring-socket in said stationary terminal.

10. In an electrical apparatus in combina-

tion a pair of stationary terminals adapted to be electrically connected with the line-circuit, one of said terminals being spring-jawed, and a removable member adapted to connect said terminals embracing a tube of insulating material having an elongated and restricted arcing-space, a binding-post at each end of the same, a fuse running through said arcing-space connected to said binding-posts, and a removable cap for one end of the fuse covering the binding-post and having a plug extending laterally therefrom in electrical connection with said binding-post, said plug adapted to enter one of said stationary terminals, and a chilling-plate over said arcing-space to tend to break the arcing, said cap having a chamber over the end of said tube and provided with a vent therefrom.

11. In an electrical apparatus in combination, a stationary terminal, a removable portion embracing a tube of insulating material having an elongated arcing-space therein, a binding-post near one end of the same, a fuse connected with said binding-post and extending through said tube, means electrically connected with said binding-post and adapted to engage said stationary terminal, and a cap covering the end of said tube and removable therefrom to expose said binding-post and having a series of diaphragms forming a series of air-chambers, said diaphragms being perforated to check the escape of the products of combustion from said arcing-space.

12. In an electrical apparatus, a stationary terminal having a spring-socket, a tube having an arcing-space therein, fuse-terminals attached to the ends of said tube, a fuse connected to said terminals, a removable cap over one end of said tube in electrical contact with the fuse-terminal at that end and having a lateral projection entering the spring-socket in the stationary terminal.

Signed at Pittsfield, Massachusetts, this 7th day of April, 1899.

HERBERT W. SMITH.
WILLIAM J. BAUGHMAN.

Witnesses:
AGNES CURTIN,
H. M. PLATT.