Dec. 4, 1923. 1,476,319

E. H. ANGIER

ART OF PACKAGING ARTICLES

Original Filed Nov. 16, 1916 2 Sheets-Sheet 1

Fig. 1.

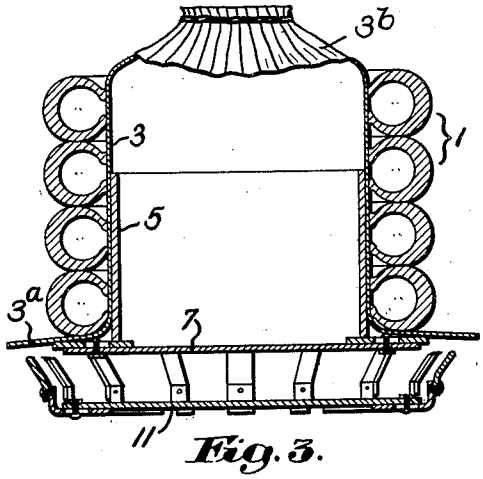

Fig. 2.

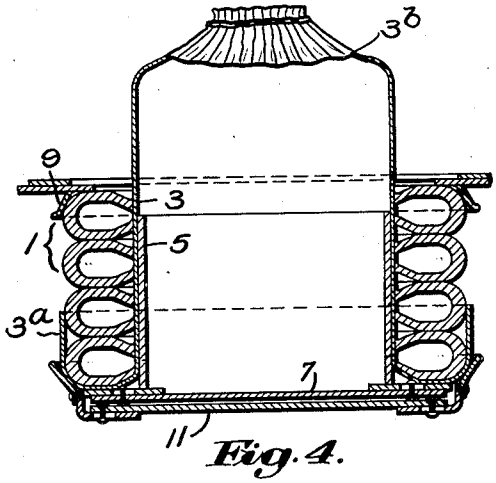

Fig. 3.

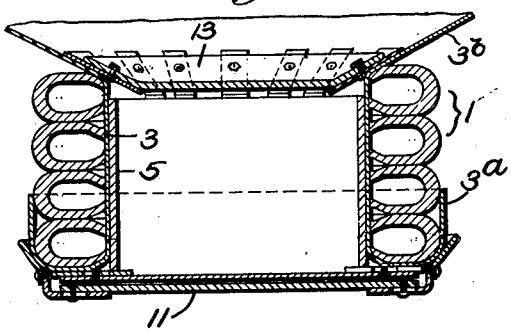

Fig. 4.

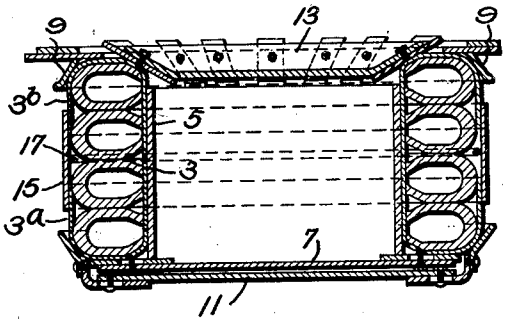

Fig. 10.

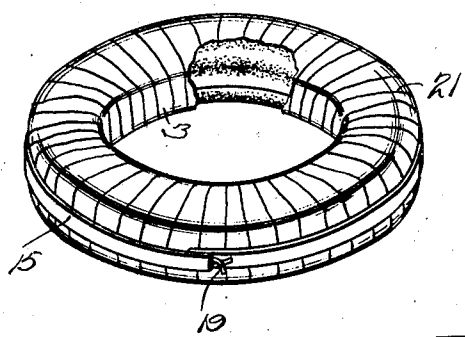

Inventor:
Edward H. Angier,
by Emery, Booth, Jamney & Varney,
Attys.

Dec. 4, 1923. 1,476,319

E. H. ANGIER

ART OF PACKAGING ARTICLES

Original Filed Nov. 16, 1916 2 Sheets-Sheet 2

Fig. 5.

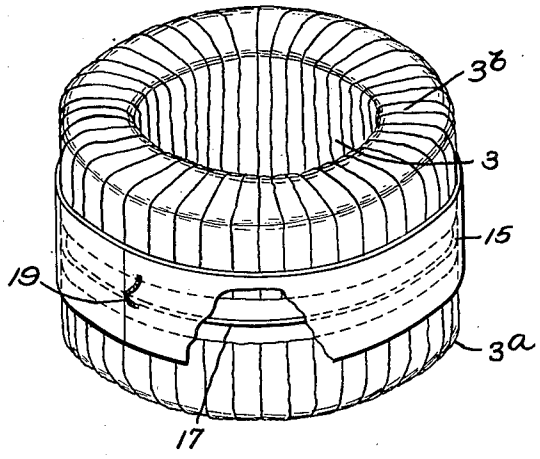

Fig. 7.

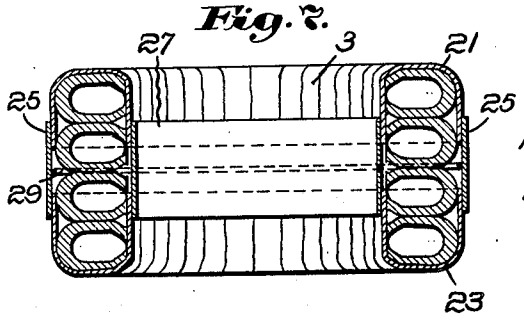

Fig. 6.

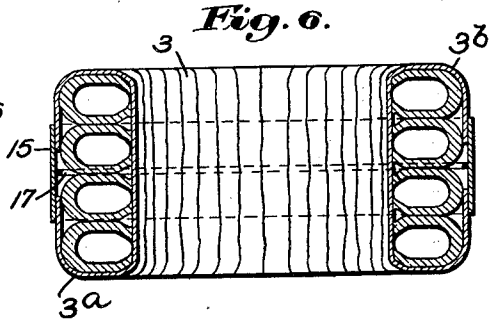

Fig. 8.

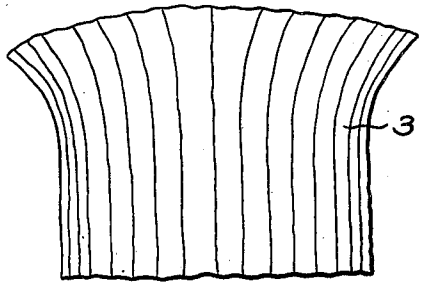

Fig. 9.

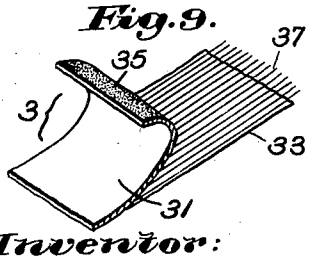

Inventor:
Edward H. Angier,
by Emery, Booth, Janney & Varney.
Attys.

Patented Dec. 4, 1923. 1,476,319

UNITED STATES PATENT OFFICE.

EDWARD H. ANGIER, OF FRAMINGHAM, MASSACHUSETTS.

ART OF PACKAGING ARTICLES.

Application filed November 16, 1916, Serial No. 131,789. Renewed April 19, 1923.

To all whom it may concern:

Be it known that I, EDWARD H. ANGIER, a citizen of the United States, and a resident of Framingham, in the county of Middlesex and Commonwealth of Massachusetts, have invented an Improvement in the Art of Packaging Articles, of which the following description, in connection with the accompanying drawings, is a specification, like characters on the drawings representing like parts.

This invention relates to the art of packaging annular and other articles, and among other objects aims to provide a wrapper which may be quickly and effectively applied to such articles to form a neat and secure package.

The character of the invention may be best understood by reference to the following description of a wrapper and method of applying the same illustrated in the accompanying drawings, wherein,—

Figs. 1 to 4 are sectional views illustrating steps in the application of the wrapper to an article;

Fig. 5 is a partially broken away perspective view of a complete wrapped package;

Fig. 6 is a vertical section through the package shown in Fig. 5;

Fig. 7 is a vertical section through a package wrapped in a manner somewhat different from the package shown in Fig. 5;

Fig. 8 is a view of a portion of the wrapper showing the construction permitting the expansion of portions thereof;

Fig. 9 is a perspective view of a portion of reinforced, waterproof paper which may be desirably used as a wrapper; and

Fig. 10 is a partially broken away perspective similar to Fig. 5 showing a package containing but a single tire.

The wrapper is particularly useful in forming a package containing a rubber tire or a group of tires, and therefore for purposes of illustration, the invention will first be described in connection with a group of four tires, although obviously its field of use is not restricted thereto.

In Figs. 1 to 4 I have shown steps of wrapping the tires with the aid of suitable appliances which might form parts of an organized machine. My invention may be most readily understood from a description of the steps and I therefore for convenience choose that method of disclosing it.

Referring first, therefore, to Figs. 1 to 4, 1 designates a group of four rubber tires to be wrapped. To accomplish this a sheet of paper 3, preferably in tubular form, may be placed over a mandrel 5 mounted on a table 7.

The paper may be crimped (Fig. 8) or otherwise formed to permit the tube to be applied to the inner circumferences of the annular tires, herein by insertion through the hole in the center of the group, and to provide relatively expansible end portions which may be spread out over the ends of the tires by opening out the crimpings locally to the necessary degree.

The paper tube is placed on the mandrel so that its lower end portion 3^a is thus flattened and spread out upon the table 7 as shown in Fig. 1. Then the group of tires is placed over the mandrel and paper tube and seated on the lower end portion of said paper.

The group of tires may next be compressed in order that the wrapper may fit closely thereto as more fully hereinafter described. To accomplish this a mold 9 is brought down against the top of the group of tires as shown in Fig. 2, with pressure sufficient to properly compress them. The mold is preferably of skeletonized cup-shape, having radial fingers which are adjustable to vary the effective size of the mold.

In the course of this last step the lower end portion 3^a of the paper may be wrapped up about the lower, outer surface portion of the group of tires. To accomplish this a base mold 11, similar in form to mold 9, may be provided beneath the table 7, so that when the top mold 9 is thrust downward the supporting table 7 and the group of tires thereon will be pressed down into said base mold and the sides or fingers of the latter will fold the lower end portion of the paper up into smooth fitting engagement with the lower, outer surface portion of the group of tires as shown in Fig. 2, the crimpings of the paper opening and closing as necessary to conform the wrapper to the shape of the tires.

Then the upper end portion 3^b of the paper which projects loosely beyond the mold 9 is folded outwardly down about the upper end portion of the group of tires. To accomplish this a presser 13 may be brought down on the top of the group of tires to the position shown in Fig. 3. While the presser 13

holds the group of tires compressed, the top mold 9 may be withdrawn. The parts will then appear as in Fig. 3 with the end of the wrapper sheet 3 projecting outwardly beyond the edges of the presser.

The top mold 9 may then be lowered once again and will engage the projecting end 3^b of the wrapper and fold it downwardly as shown in Fig. 4 fitting it smoothly over the outer circumference of the annular group of tires.

The paper may be of sufficient length so that the upper and lower end portions of the paper may overlap and be secured together, or they may terminate with a space between them which may be bridged by a connecting strip. Preferably I secure the ends together as shown in Fig. 4 by a strip 15 which may have a gummed coating applied to the inner surface thereof which when moistened will adhere to the end portions of the sheet and securely hold the wrapper about the article.

The tires should remain under compression a short time to allow the gummed coating to dry and then the cup-shaped top mold and the presser are lifted from the package and the latter may be then lifted from the mandrel or the mandrel may be lowered therefrom.

When the pressure is released from the package the tires will expand more or less and maintain the wrapper in tight, close-fitting engagement therewith, thereby presenting a package of neat, finished appearance.

To facilitate opening of the package a strand 17 (Figs. 4 and 5) of wire, cord or other suitable material may be applied to and adhere to the inner surface of the connecting strip 15, so that when the latter is applied to the package said wire will extend circumferentially thereof between the ends of the paper. An end 19 (Fig. 5) of the wire may project out from the strip where it is conveniently accessible to be grasped and pulled. This will slit the strip circumferentially thereof, and thereby separate the upper and lower portions of the wrapper which may be readily removed from the group of tires.

In Fig. 7 is shown a package similar to the one described with the exception that the wrapper comprises separate end portions 21 and 23 which are connected by an outer strip 25 and an inner strip 27. An opener strand 29 is shown applied to the outer strip, but obviously such a strand might be applied to the inner strip if desired.

In Fig. 9 is shown a desirable material for the wrapper comprising outer sheets 31 and 33 having a layer 35 of black asphaltum or other suitable waterproof adhesive between them. A series of reinforcing threads 37 are provided, which may conveniently be introduced into the adhesive layer. Use of waterproof, reinforced paper is highly desirable because it effectively protects the article wrapped from moisture and weather, and the reinforcing threads enable the paper to withstand without rupture the strain brought on the paper when the compression on the article is released and also assist the paper to withstand the wear and strain which it necessarily undergoes during handling or shipment of the article.

In Fig. 10 I have shown a package containing but a single tire instead of four which is made in the same manner as the package shown in Fig. 5. The tire is compressible and is compressed in the wrapping operation and expands within the wrapper sheet 3 to form a closely wrapped package.

Having described one illustrative embodiment of my invention without limiting the same thereto, what I claim as new and desire to secure by Letters Patent is:

1. A sealed package comprising an elastic tire having circumferentially extending wrapping material snugly enclosing it, said package being characterized by the fact that the tire is held under compression during the fitting and sealing of the wrapping material.

2. A sealed package comprising a plurality of elastic tires in lateral relationship having circumferentially extending wrapping material snugly enclosing them, said package being characterized by the fact that the tires are held under compression during the fitting and sealing of the wrapping material.

In testimony whereof, I have signed my name to this specification.

EDWARD H. ANGIER.