July 13, 1943. R. H. JOHNSTON 2,324,000

HOIST STRUCTURE

Filed Oct. 10, 1940 3 Sheets-Sheet 1

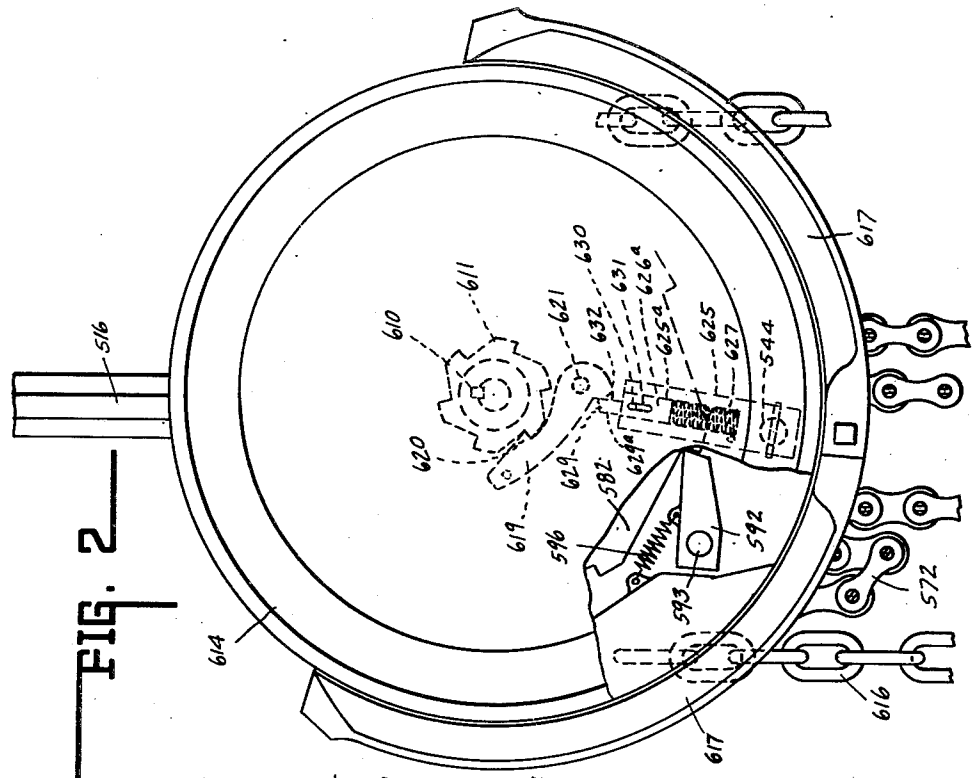

FIG. 2

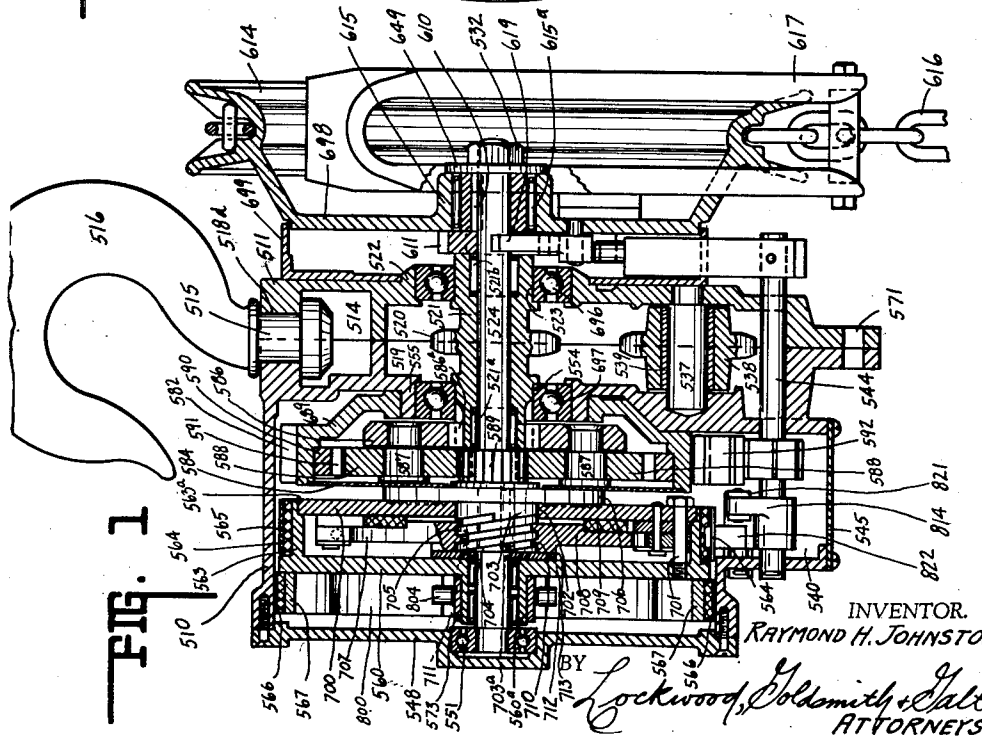

FIG. 1

INVENTOR.
RAYMOND H. JOHNSTON.
BY Lockwood, Goldsmith & Galt,
ATTORNEYS.

July 13, 1943. R. H. JOHNSTON 2,324,000

HOIST STRUCTURE

Filed Oct. 10, 1940 3 Sheets-Sheet 2

FIG. 4

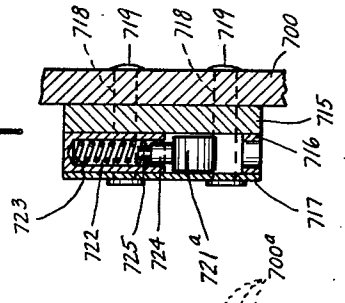

FIG. 5

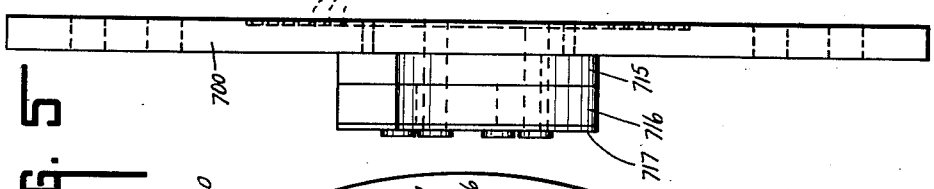

FIG. 3

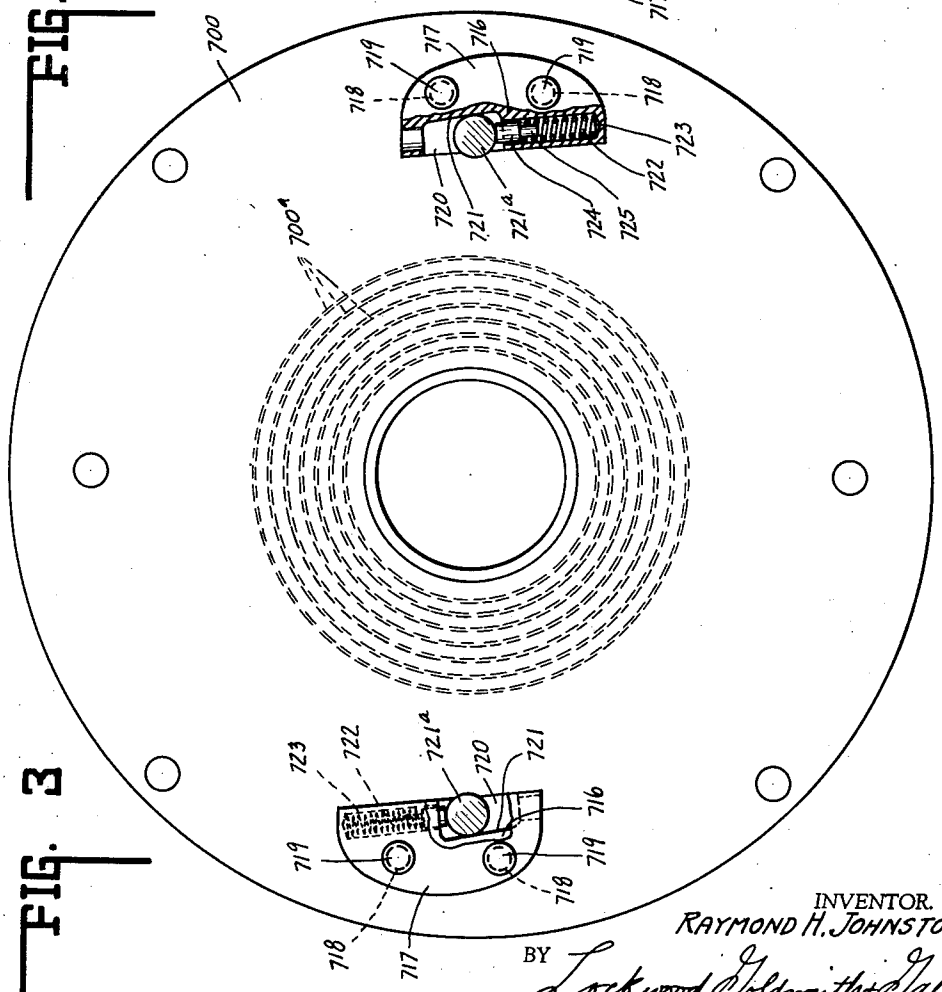

INVENTOR.
RAYMOND H. JOHNSTON,
BY Lockwood, Goldsmith & Galt,
ATTORNEYS.

July 13, 1943. R. H. JOHNSTON 2,324,000

HOIST STRUCTURE

Filed Oct. 10, 1940 3 Sheets-Sheet 3

FIG. 7

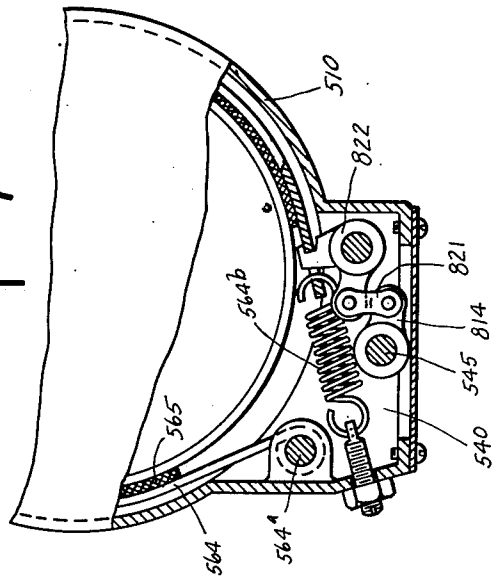

FIG. 6

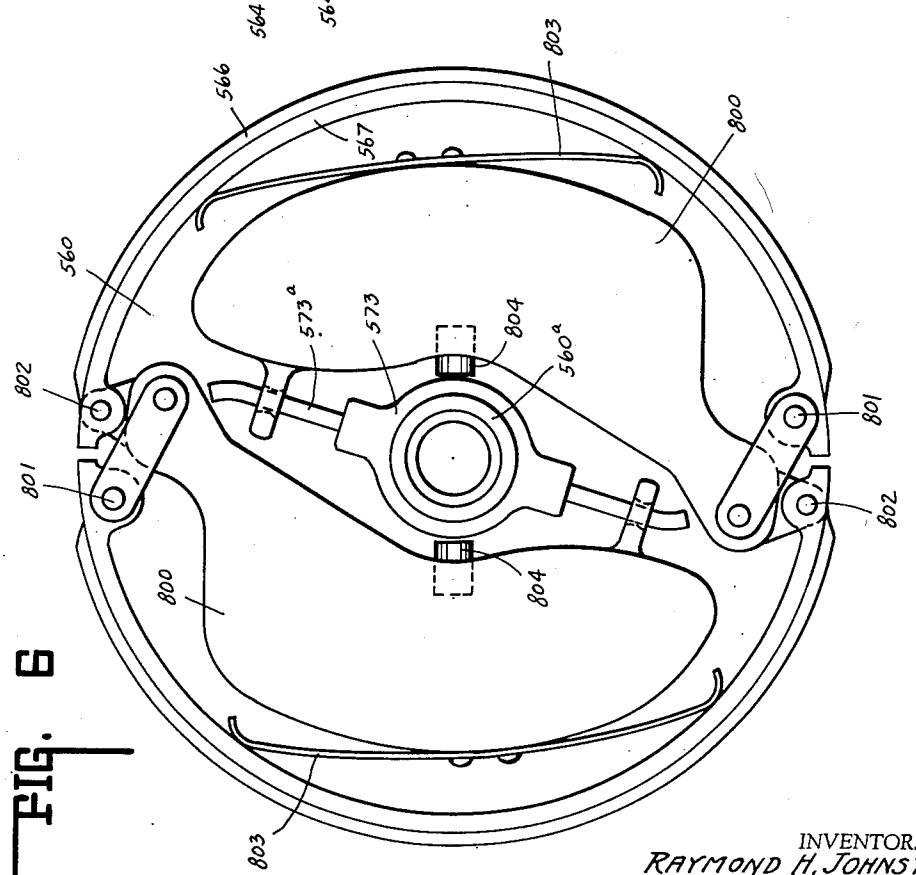

INVENTOR.
RAYMOND H. JOHNSTON,
BY Lockwood, Goldsmith & Galt,
ATTORNEYS.

Patented July 13, 1943 2,324,000

UNITED STATES PATENT OFFICE

2,324,000

HOIST STRUCTURE

Raymond H. Johnston, Newtown, Ind., assignor to Coffing Hoist Company, Danville, Ill., a co-partnership consisting of Fredrick W. Coffing and Robert R. Bookwalter

Application October 10, 1940, Serial No. 360,562

11 Claims. (Cl. 254—171)

This invention relates to a hoist structure wherein there is included a reversible, load supporting shaft rotatable in opposite directions for load elevating and load lowering.

For safety purposes, in load lowering by gravity, such hoist includes a centrifugally operable governor to prevent load dropping at too rapid a rate.

For safety purposes in load holding, et cetera, there is included a planetary arrangement and a brake arrangement.

For simplicity of construction and durability thereof, such hoist includes a unidirectional clutch of simple design associated with a disc or like clutch arrangement, operation of the latter being effected by means of a thread or screw mechanism.

The chief object of the present invention is to provide in a gravity load lowering hoist, mechanisms and arrangements broadly of the character indicated to produce a simple, safe and efficient hoist of the character indicated.

The chief feature of the invention consists in the accomplishment of said object in the manner and by the means thus broadly designated.

The hoist illustrated herein is not of free-chain character in load lowering direction but is of free-chain character in load elevating direction but such hoist may by including therein mechanism of the copending joint application Serial No. 346,486, filed July 20, 1940, be transformed to a hoist capable of free-chain movement in load lowering direction when not under load.

Other objects and features will be set forth more fully hereinafter.

The full nature of the invention will be understood from the accompanying drawings and the following claims and description:

In the drawings,

Fig. 1 is a central sectional view through one embodiment of the invention.

Fig. 2 is an elevational view thereof, parts being broken away to show other parts in detail.

Fig. 3 is a side elevation of a unidirectional clutch element included in the invention, a portion of such element being broken away to show the portion in section and greater detail.

Fig. 4 is a sectional view through the clutching element.

Fig. 5 is an end elevation of the unidirectional clutch construction.

Fig. 6 is a side elevation of the speed governor mechanism included herein.

Fig. 7 is a sectional view of the brake and immediate control mechanism therefor.

In Figs. 1 and 2 of the drawings, the numeral **510** indicates a hoist housing part cooperating with part **511** to form a chamber **514** apertured at **518***d* to swivably support portion **515** of hook **516** by which the hoist may be suspended or supported.

These parts include a bottom opening chamber **519** in which is mounted a load sustaining sprocket chain **572** supported by sprocket teeth **520** carried by tubular shaft **521** rotatably supported at **554** and **523** by anti-friction ball race structures **697** and **696** in portions **555** and **522**, respectively, of parts **510** and **511**.

Therebeneath for multiple loop chain purposes, there may be provided sprocket **538** anti-frictionally supported at **539** upon shaft **537** similarly supported by parts **510** and **511**. If desired, one end of load chain **572** may be anchored at **571**.

Rotatably supported on portion **555** of part **510** is an outwardly and laterally directed portion **689** which terminates in an annular portion having external and ratchet type teeth **582**. Within the same is mounted the ring gear portion **590** of a planetary system. In Fig. 2 pawl **592** pivoted upon the frame at **593** is normally constrained by spring **596** into ratchet engagement. The entire planetary system may rotate counterclockwise, see Fig. 2, but is prevented from clockwise rotation by said pawl **592** unless and until said pawl is retracted as illustrated, described and claimed in the aforesaid copending joint application. When not retractible, the hoist cannot operate as a free-chain hoist in load lowering direction when not under load.

Positioned beneath sprocket **538** is control shaft **544** intended primarily for brake control purposes as hereinafter pointed out. Shaft **544** extends into chamber forming extension **540** of housing **510** which is closed by plate **545**.

Positioned parallel to portion **689** is pinion carrier **586** mounting shafts **587** upon which are mounted pinions **588** meshing with ring gear **590** having teeth **591**. These pinions mesh with sun gear **589** rigid with shaft **524**. A plate **584** may close this gear chamber, if desired, and said chamber may be packed with lubricant. The pinion carrier plate **586** is keyed as at **586***a* to shaft **521** where same projects into the planetary chamber. Shaft **521** may be antifrictionally mounted on shaft **524** as at **521***a* and **521***b*.

Thus, power in load elevation applied to shaft **524**, as hereinafter set forth, is applied through the planetary to the sprocket **520** for load chain movement and power from the load in gravity lowering is also applied to the restraint through

said planetary. The applications are not the same, however, as hereinafter pointed out, due to various clutches, etc. In effect it will be apparent ratchet **582** and pawl **592** constitute a clutch, the planetary being free to bodily rotate counterclockwise for load elevation—see Fig. 2—and being prevented therefrom by pawl **592** upon attempted reverse rotation (load lowering movement).

The shaft **524** is extended beyond the planetary mechanism and its free end is rotatably supported in race **551** carried by a cup portion of a cover plate **548** secured to housing **510**. Rotatably supported upon said shaft **524** is a plate structure **560** having a hub portion **560***a* directed toward the bearing **551** and a peripheral drum forming portion **563** oppositely directed.

Associated with this hub **560***a*, see Figs. 1 and 6, and rotatable thereby is a centrifugally operable governor mechanism having collar **573** with arms **573***a*, see Fig. 6. The weight operable arms **800** are connected at **801**—**802** to adjacent ends of shoes **567** having friction lining **566** to facilitate shoe gripping of the adjacent interior surface of housing **510** upon attainment of predetermined load lowering speed to prevent excessive load lowering speed. A spring **803** is the governor load spring and bumpers **804** may also be provided. Such a governor structure per se is broadly illustrated and described in Patent No. 2,099,676, dated November 23, 1937.

Associated with the inwardly directed drum portion **563** of plate **560** is a brake band **564**, see Figs. 1 and 7, having friction lining **565** thereon. Normally, this band is anchored (and adjustably, if desired) at one end **564***a*, see Fig. 7, to housing **510** and its opposite end is spring constrained at **564***b* into drum engagement. Hence, normally, the plate **560** is held against rotation by this brake. Since plate **560** does not rotate, the centrifugal brake device remains functionless. It, however, becomes operative when band **564** is released and plate **560** exceeds the predetermined speed of rotation. When shaft **544** is rocked, it, through members **814**, **822** and **821** releases the band from braking engagement and plate **560** is then free to rotate relative to housing **510** and the degree of such freedom and rotation is determined by the degree of release applied.

This release arrangement will be referred to more fully hereinafter in the description of the power application to shaft **524** and the power to the associated control to the rock-shaft **544**.

Reference now will be had more particularly to Fig. 1. The drum **563** has its outer edge internally recessed at **563***a* and seated therein is a drum plate **700** which is suitably anchored at a plurality of points by bolts **701**, see lower portion of Fig. 1, which draw the plate tightly to its seat. Plate **700** is centrally apertured at **702** and rotatably supported in said aperture is member **703** having on its drum enclosed end and periphery **704** the screw thread **705**. The opposite end includes plate portion **706** of larger diameter than hub portion **703** but smaller in diameter than plate **700**.

A plate (pressure) member **707** nested between plates **560** and **700**—see Fig. 1—is recessed at **708** in the face confronting the drum plate **700**. Seated in this recess is the friction lining or a clutch disc **709** which, when engaging plate **700** with sufficient force, causes the drum **563** to rotate as hereinafter set forth. This plate **707** is centrally apertured and complementarily threaded as at **710** to receive threaded portion **704**—**705**, To the free end **704** of member **703** is secured as at **711**, see Fig. 1, plate **712** which at **713** may have contact with the pressure plate **707** adjacent the end extended as a collar.

The drum closing plate **700**—see Figs. 1, 3, 4 and 5—at spaced points and equidistant from the axis thereof, supports a plurality of clutching arrangements. Herein each arrangement includes a spacer plate **715**, a body plate **716** and a cover plate **717**. All are apertured as at **718** and mounted therein are rivets **719** which anchor said assembled members to the drum plate **700**. This arrangement includes a recess **720**, see Figs. 3 and 4, with a back wall **721** biased to a radius thereto. Seated in the recess is a roller **721***a* normally constrained by spring **722** seated in a recess communicating bore **723** in member **716**. The projecting end of the spring is associated with the roller bearing members **724** having neck portion **725** seated in the spring end. The roller thus is normally constrained toward the narrow or shallow end of the recess **720**. The cover plate **717** may, if desired, serve as a roller retainer against accidental axial escape. The spacer plate **715** also may serve roller locator—see Fig. 4. Herein both features are included.

It is to be observed, see Fig. 1, that in coplaner alignment with the rollers **721***a* is the plate **707** and the external periphery thereof is operatively associated with said rollers. The screw member **703** is rigid—see key **703***a*, Fig. 1—with shaft **524**. The pressure plate **707** is relatively free except for the screw thread connection to the former and possible clutch connection to drum plate **700**. When the two plates **707** and **700** have relative rotative movement in a direction so that the rollers move toward the shallow end of the recesses, the plates upon a predetermined amount of such movement lock together and thereafter move as a unit.

Relative movement in the opposite direction permits the rotating plate to rotate without affecting rotation of the other. This constitutes a unidirectional clutch structure of positive character and is not dependent upon tooth strength or lack of tooth strength or lack of tooth failure as required in a ratchet and pawl clutch structure which also is of unidirectional clutch character.

Now, when shaft **524**, carrying the planetary sun gear **589** is rotated counterclockwise—see Fig. 1—which effects load elevation, the two plates last mentioned have relative rotation in that direction and no clutch clamping occurs between the plates. When, however, shaft **524** is rotated reversely or tends so to do (incident to load lowering by gravity) the rollers **721***a* engage the two members so that the two plates through the screw action are caused to engage each other through the clutch disc **709**. If the brake band be not released, the load then will be held because plate **700** is rigid with drum **563** then held by the brake band **565**—**564**.

If load holding is not desired, but load lowering is desired, the brake band is released to the desired degree and the entire governor structure and brake drum rotate in the load lowering movement. Should the control imposed by the brake fail, the increased speed of lowering transmitted to the centrifugal governor causes the shoes **566** and **567** thereof to grip the housing **510** for slowing down the lowering movement and thus prevent the "dropping" of the load.

The correlation of the screw thread associated parts and the roller clutch is such that the ac-

tion obtained therefrom is as above described and also the "shock" of holding power application is progressive and of increasing character. Furthermore, it is observed that the actual lowering speed is effectively increased or multiplied through the planetary system to the governor so that the governor action is quickened wherefore the safety factor of the hoist is correspondingly increased.

Reference now will be had to the application of power to shaft **524** and the brake control arrangement. In Figs. 1 and 2 there is indicated a chain wheel **614** which mounts an endless chain **616** of crossed link type and the periphery of the wheel is complementarily formed for chain reception. Carried by the housing structure is a chain guard **617**. This wheel has a plate portion **698** that is associated with portion **699** carried by housing **511** forming a chamber therewith.

The hub **615** of said wheel is rotatably mounted at **615***a* on axle **524** being retained thereon by washer **649** and nut **532**.

Keyed as at **610** to shaft **524** between the exposed wheel end of shaft **521** and the hub **615** is the ratchet **611**. A pawl **619**, see Fig. 2, is carried by the wheel **614** being pivoted on plate portion **698** thereto at **621**. This pawl has the tooth **620** and the oppositely directed tooth portion **632**. This pawl **619** is normally constrained into ratchet engagement by means not illustrated.

In the counter-clockwise rotation of chain power wheel **614** by pulling down on the left-hand portion of chain **616**, looking at Fig. 2, the pawl tooth **620**, in its counter-clockwise rotation with wheel **614** which carries same, picks up the ratchet **611** and same, being keyed to shaft **524** as at **610**, is rotated counter-clockwise. This is the sole power for load elevation.

The hoist is of gravity lowering type. Of course, it has free chain action, when without load, in the load elevating direction. It may or may not have free chain action in load lowering direction when without load as previously set forth. As herein illustrated, it is not of free chain character.

Referring to Fig. 1, it is noted shaft **524** is rigid with sun gear **589**, same meshing with pinion gears **588** rotatable on shafts **587** carried by plate **586** keyed at **586***a* to enveloping shaft **521** carrying load chain sprocket **520**. The pinions **588** mesh with ring gear **591** rigid with ratchet **582**. Said ratchet is normally engaged by locking pawl **592** constrained to such engagement by spring **596**. This pawl **592** is the load holding pawl. This pawl permits the planetary to rotate as a unit.

In the counter-clockwise, load elevating, rotation of the sun gear, the supporting plate **586** thus is similarly rotated due to the locking reaction between the pinions and the ring gear and, hence, sprocket **520** rotates in the same direction, counterclockwise, as shaft **524**.

Since the chain wheel and shaft **524** have a one-way driving connection only, reverse rotation of sprockets or load lowering cannot be effected by the direct application of power from the chain wheel **614** to the sprocket **520**.

To lower the load, the right-hand portion of chain **616** is pulled down. This results in clockwise rotation of the power until the tooth **632** of pawl **619**, see Fig. 2, carried thereby engages plunger **626***a*. Continued clockwise rotation, see Fig. 2, then rocks the lever **625** and shaft **544** counter-clockwise. The brake structure thus is released corresponding to the degree of rocking.

It will be recalled that shaft **544**—see Fig. 1—carries the brake release mechanism in chamber **540**, see Fig. 7, and projects therefrom toward the power wheel, see Fig. 1. Keyed to said shaft **544**, see Fig. 2, is an arm **625** which is socketed at **625***a* to receive spring **627** bearing on the inner end of plunger structure **626***a*, same having an exposed end **629***a* terminating in a relieved face **629**. The plunger **626***a* includes a lateral pin **630** slidable in elongated slot **631**.

It is to be observed that since in this brake release or load lowering control movement the pawl **619** rotates clockwise, and since it ratchets upon ratchet **611** no power wheel clockwise movement is effective at any time to power rotate shaft **524** clockwise for load lowering. Slight power wheel rotation clockwise is, however, necessary for release purposes. Such slight initial power wheel clockwise rotation separates peripherally the pawl and ring gear ratchet so that the draft interlock therebetween is removed.

In the counter-clockwise rotation of shaft **524**, the relationship of the screw clutch, etc., is such that it is not effective for clutching operation, so that in load elevation, pawl **592** is a load holding element if the power is released, et cetera.

Upon reverse rotation of shaft **521**, due to load, the screw clutch is rotated clockwise which brings the plate clutch members together and also then serves to connect through the roller clutch, the brake and governor mechanisms to the load, the lowering travel of which, as previously explained, is controlled manually through the chain wheel control of the brake and automatically through the governor structure if the manual control be accidentally actuated to "drop" the load, or an equivalent failure occur.

The hoist, therefore, may be very closely controlled for lowering, safety controlled lowering and rapidly operated for load elevating, the lowering being manually controlled but gravity actuated.

The present invention also in the dual clutch structure provides in effect a cushioning structure which permits the load to readily start lowering before the clutches become fully effective. Likewise, the clutches are of positive character hence the greater the load lowering the force applied thereto, the greater will be the clutching force generated.

The face of drum plate **700** may be suitably grooved as at **700***a*, if desired—see Fig. 3.

While the invention has been illustrated and described in great detail in the drawings and foregoing description, the same is to be considered as illustrative and not restrictive in character.

The several modifications described herein as well as others which will readily suggest themselves to persons skilled in this art, all are considered to be within the broad scope of the invention, reference being had to the appended claims.

The invention claimed is:

1. In a hoist having a sprocket, a load chain thereon and a housing supporting the sprocket, the combination of a sprocket supporting shaft, means for rotating the same in one direction for load elevation, a one-way clutch operatively connected to the means and shaft, a brake structure normally constrained to brake application, a control for said brake structure, a one-way clutch operatively connected to the brake structure and shaft, permitting load elevation without brake release, a second one-way clutch operatively con-

nected to the brake structure and shaft, said second and third mentioned clutches being in series with each other, and means operable by the shaft rotating means upon predetermined movement in a direction opposite that for load elevation for effecting brake structure control operation for load lowering.

2. In a hoist having a sprocket, a load chain thereon and a housing supporting the sprocket, the combination of a sprocket supporting shaft, means for rotating the same in one direction for load elevation, a one-way clutch operatively connected to the means and shaft, a brake structure normally constrained to brake application, a control for said brake structure, a one-way clutch operatively connected to the brake structure and shaft, permitting load elevation without brake release, a second one-way clutch operatively connected to the brake structure and shaft, said second and third mentioned clutches being in series with each other, means operable by the shaft rotating means upon predetermined movement in a direction opposite that for load elevation for effecting brake structure control operation, and a planetary structure operatively connected to the sprocket and brake structure.

3. In a hoist having a sprocket, a load chain thereon and a housing supporting the sprocket, of a sprocket supporting shaft, means for rotating the same in one direction for load elevation, a one-way clutch operatively connected to the means and shaft, a brake structure normally constrained to brake application, a control for said brake structure, a one-way clutch operatively connected to the brake structure and shaft, permitting load elevation without brake release, a second one-way clutch operatively connected to the brake structure and shaft, said second and third mentioned clutches being in series with each other, means operable by the shaft rotating means upon predetermined movement in a direction opposite that for load elevation for effecting brake structure control operation, and a pawl and ratchet arrangement operatively connected to the housing and shaft for load holding.

4. In a hoist having a sprocket, a load chain thereon and a housing supporting the sprocket, the combination of a sprocket supporting shaft, means for rotating the same in one direction for load elevation, a one-way clutch operatively connected to the means and shaft, a brake structure normally constrained to brake application, a control for said brake structure, a one-way clutch operatively connected to the brake structure and shaft, permitting load elevation without brake release, a second one-way clutch operatively connected to the brake structure and shaft, said second and third mentioned clutches being in series with each other, a speed operable governor brake arrangement in multiple with the first mentioned brake structure for preventing excessive load lowering speeds upon brake failure and/or accidental full release of the brake structure, means operable by the shaft rotating means upon predetermined movement in a direction opposite that for load elevation for effecting brake structure control operation.

5. In a hoist having a sprocket, a load chain thereon and a housing supporting the sprocket, the combination of a sprocket supporting shaft, means for rotating the same in one direction for load elevation, a one-way clutch operatively connected to the means and shaft, a brake structure normally constrained to brake application, a control for said brake structure, a one-way clutch operatively connected to the brake structure and shaft, permitting load elevation without brake release, a second one-way clutch operatively connected to the brake structure and shaft, said second and third mentioned clutches being in series with each other, means operable by the shaft rotating means upon predetermined movement in a direction opposite that for load elevation for effecting brake structure control operation, a planetary structure operatively connected to the sprocket and brake structure, and a pawl and ratchet arrangement operatively connected to the housing and planetary structure permitting unitary rotation of the planetary structure in one direction of load movement and requiring planetary action in the opposite direction of load movement.

6. In a hoist having a sprocket, a load chain thereon and a housing supporting the sprocket, the combination of a sprocket supporting shaft, means for rotating the same in one direction for load elevation, a one-way clutch operatively connected to the means and shaft, a brake structure normally constrained to brake application, a control for said brake structure, a one-way clutch operatively connected to the brake structure and shaft, permitting load elevation without brake release, a second one-way clutch operatively connected to the brake structure and shaft, said second and third mentioned clutches being in series with each other, and one of the series clutches being of the progressive pressure type, including a clutch plate, a confronting plate, said plates being relatively rotatable, a spiral feed connection for associating the plates together and with pressures corresponding to the power applied thereto, and a planetary structure operatively connected to the sprocket and brake structure.

7. In a hoist having a sprocket, a load chain thereon and a housing supporting the sprocket, the combination of a sprocket supporting shaft, means for rotating the same in one direction for load elevation, a one-way clutch operatively connected to the means and shaft, a brake structure normally constrained to brake application, a control for said brake structure, a one-way clutch operatively connected to the brake structure and shaft, permitting load elevation without brake release, a second one-way clutch operatively connected to the brake structure and shaft, said second and third mentioned clutches being in series with each other, and one of the series clutches being of the progressive pressure type, including a clutch plate, a confronting plate, said plates being relatively rotatable, a spiral feed connection for associating the plates together and with pressures corresponding to the power applied thereto, a planetary structure operatively connected to the sprocket and brake structure, and a pawl and ratchet arrangement operatively connected to the housing and planetary structure permitting unitary rotation of the planetary structure in one direction of load movement and requiring planetary action in the opposite direction of load movement.

8. A hoist as defined by claim wherein one of the series clutches is of the progressive pressure type including a clutch plate, a confronting plate, said plates being relatively rotatable, and a spiral feed connection for associating the plates together and with pressures corresponding to the powers applied thereto.

9. A hoist as defined by claim 1 wherein one of the series clutches is of the progressive pres-

sure type including a clutch plate, a confronting plate, said plates being relatively rotatable, and a spiral feed connection for associating the plates together and with pressures corresponding to the powers applied thereto, the other of said series clutches being of roller and inclined slot character.

10. A hoist as defined by claim 1 wherein one of the series clutches is of the progressive pressure type including a clutch plate, a confronting plate, said plates being relatively rotatable, and a spiral feed connection for associating the plates together and with pressures corresponding to the power applied thereto, the first mentioned one-way clutch being of pawl and ratchet type.

11. A hoist as defined by claim 1 wherein one of the series clutches is of the progressive pressure type including a clutch plate, a confronting plate, said plates being relatively rotatable, and a spiral feed connection for associating the plates together and with pressures corresponding to the powers applied thereto, the other of said series clutches being of roller and inclined slot character, the first mentioned one-way clutch being of pawl and ratchet type.

RAYMOND H. JOHNSTON.