**PCT** WORLD INTELLECTUAL PROPERTY ORGANIZATION
International Bureau

INTERNATIONAL APPLICATION PUBLISHED UNDER THE PATENT COOPERATION TREATY (PCT)

(51) International Patent Classification 6 :
B02C 7/12, D21D 1/30

A1

(11) International Publication Number: **WO 96/00616**

(43) International Publication Date: 11 January 1996 (11.01.96)

(21) International Application Number: PCT/SE95/00779

(22) International Filing Date: 26 June 1995 (26.06.95)

(30) Priority Data:
9402281-1 29 June 1994 (29.06.94) SE

(71) Applicant *(for all designated States except US)*: SUNDS DEFIBRATOR INDUSTRIES AB [SE/SE]; S-851 94 Sundsvall (SE).

(72) Inventors; and
(75) Inventors/Applicants *(for US only)*: ROHDÉN, Lennart [SE/SE]; Postiljonsvägen 34, S-122 47 Enskede (SE). OBITZ, Lars [SE/SE]; Tantalvägen 17, S-185 94 Vaxholm (SE).

(74) Agent: SUNDQVIST, Hans; Sunds Defibrator Industries AB, Strandbergsgatan 61, S-112 51 Stockholm (SE).

(81) Designated States: AU, BR, CA, FI, JP, NO, NZ, US, European patent (AT, BE, CH, DE, DK, ES, FR, GB, GR, IE, IT, LU, MC, NL, PT, SE).

**Published**
*With international search report.*

(54) Title: REFINING ELEMENT

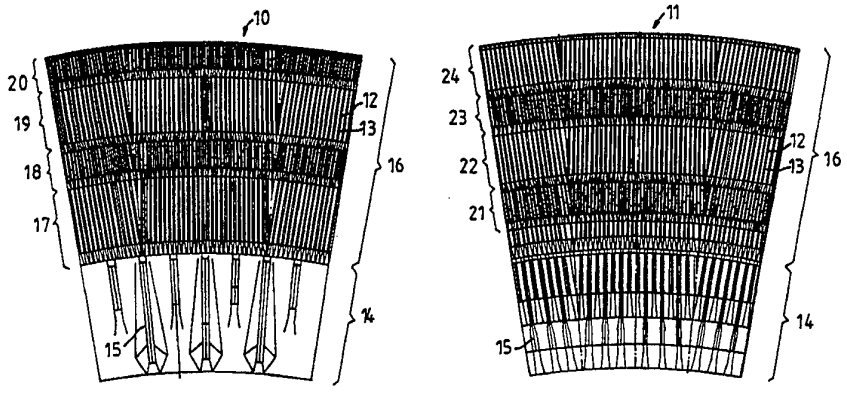


(57) Abstract

A pair of co-operating refining elements (10, 11) intended for a disc refiner to disintegrate and refine lignocellulosic material in a refining gap between two opposed refining discs rotating relative to each other. The refining elements (10, 11) are intended to be placed directly in front of each other on opposed refining discs. Both refining elements are formed with bars (12) and intermediate grooves (13), which in the outer portion (16) of the refining elements (10, 11) are arranged in a number of limited zones (17-24) located radially outside each other. Each refining element (10, 11) comprises at least one zone (18, 20 and, respectively, 21, 23) where the bars (12) are placed more densely than in an adjoining zone (17, 19 and, respectively, 22, 24). These more densely patterned zones (18, 20) on one refining element (10) shall be radially offset without overlapping in relation to the more densely patterned zones (21, 23) on the other refining element (11).

*FOR THE PURPOSES OF INFORMATION ONLY*

Codes used to identify States party to the PCT on the front pages of pamphlets publishing international applications under the PCT.

| | | | | | |
|---|---|---|---|---|---|
| **AT** | Austria | **GB** | United Kingdom | **MR** | Mauritania |
| **AU** | Australia | **GE** | Georgia | **MW** | Malawi |
| **BB** | Barbados | **GN** | Guinea | **NE** | Niger |
| **BE** | Belgium | **GR** | Greece | **NL** | Netherlands |
| **BF** | Burkina Faso | **HU** | Hungary | **NO** | Norway |
| **BG** | Bulgaria | **IE** | Ireland | **NZ** | New Zealand |
| **BJ** | Benin | **IT** | Italy | **PL** | Poland |
| **BR** | Brazil | **JP** | Japan | **PT** | Portugal |
| **BY** | Belarus | **KE** | Kenya | **RO** | Romania |
| **CA** | Canada | **KG** | Kyrgystan | **RU** | Russian Federation |
| **CF** | Central African Republic | **KP** | Democratic People's Republic of Korea | **SD** | Sudan |
| **CG** | Congo | | | **SE** | Sweden |
| **CH** | Switzerland | **KR** | Republic of Korea | **SI** | Slovenia |
| **CI** | Côte d'Ivoire | **KZ** | Kazakhstan | **SK** | Slovakia |
| **CM** | Cameroon | **LI** | Liechtenstein | **SN** | Senegal |
| **CN** | China | **LK** | Sri Lanka | **TD** | Chad |
| **CS** | Czechoslovakia | **LU** | Luxembourg | **TG** | Togo |
| **CZ** | Czech Republic | **LV** | Latvia | **TJ** | Tajikistan |
| **DE** | Germany | **MC** | Monaco | **TT** | Trinidad and Tobago |
| **DK** | Denmark | **MD** | Republic of Moldova | **UA** | Ukraine |
| **ES** | Spain | **MG** | Madagascar | **US** | United States of America |
| **FI** | Finland | **ML** | Mali | **UZ** | Uzbekistan |
| **FR** | France | **MN** | Mongolia | **VN** | Viet Nam |
| **GA** | Gabon | | | | |

Refining element

This invention relates to the disintegration and refining of lignocellulosic material in a disc refiner. The invention, more precisely, relates to a refining element for use in a refiner of the said type.

A disc refiner comprises two opposed refining discs, which are rotatable relative each other where one or both of the discs are rotary. A plurality of refining elements arranged on the refining discs form a pattern of bars and intermediate grooves. The refining discs are positioned so that the refining elements form a refining gap, through which the fiber material is intended to pass outward from within whereby the disintegration is carried out by the bars of the refining elements.

The refining elements in the inner portion of the refining gap are formed with bars of a greater coarseness in order to carry out an initial disintegration and to feed the material outward to the outer portion of the refining gap where the disintegration and refining proper are taking place.

The refining of the material requires a large energy input, which is supplied by the rotation of the rotary refining disc or discs. The greatest part of the energy is transformed to heat, as a result of which large amounts of steam are generated due to the water content in the material. The steam, which substantially is generated in the refining gap, has high pressure and flows both outward and inward in the refining gap.

To disintegrate and refine the fiber material by the bars of the refining elements, it is necessary in most cases to provide flow restrictions, so-called dams,

in the grooves between the bars. The material is forced by these dams to move upward out of the grooves and be worked between the bars in the refining gap. Unworked material is hereby prevented from passing outward through the refining gap. The said dams, however, obstruct the generated steam, which thereby disturbs the material flow, and have a negative effect on the capacity and operation stability of the refiner.

The aforesaid problems can be reduced by the present invention, which also offers additional advantages with regard to the quality of the refined material. According to the invention, co-operating refining elements on opposed refining discs are provided with radial zones, in which the bars are arranged in a denser or sparser relationship.

The characterizing features of the invention are apparent from the attached claims.

The invention is described in greater detail in the following, with reference to the accompanying drawing illustrating an embodiment of the invention, in which drawing
Figs. 1 and 2 show two co-operating refining elements according to the invention.

The co-operating opposed refining elements 10,11 in Fig. 1 and, respectively, 2 carry a pattern of bars 12 and intermediate grooves 13, which extend substantially radially across the surface of the refining elements. The co-operating refining elements 10,11 are intended to define between themselves a refining gap. An inner portion 14 of the refining elements is provided with coarse bars 15, which are intended to carry out a first disintegration of the material and to feed

it outward in the refining gap. An outer portion 16 of the refining elements 10,11 is intended to form the refining gap proper where disintegration and refining of the material take place.

The outer portion 16 of the refining elements 10,11 is divided into a plurality of limited zones 17-20 and, respectively,21-24 ,which are located radially outside of each other. The bars in these zones 17-24 are arranged alternatingly in a denser or sparser relationship from one zone to an adjoining zone, counted in radial direction. The refining elements 10,11 are so formed, that a zone 18,20 and, respectively, 21,23 with a dense pattern of bars on a refining element is located directly in front of a zone 22,24 and, respectively, 17,19 with sparsely spaced bars on the opposed co-operating refining element. The grooves, furthermore, preferably are shallower in the more densely patterned zones and deeper in the more sparsely patterned zones.

By this arrangement, the fiber flow through the refining gap will be moved alternatingly over to the opposed refining element when the flow in a more sparsely patterned zone arrives at a more densely patterned zone. The demand for dams can hereby be reduced and in certain cases be eliminated entirely. The steam transport is hereby facilitated and the disturbing effect of the steam be decreased substantially. As to the size of the zones, in order not to obstruct the fiber flow, the more densely patterned zones must be somewhat narrower than the adjoining more sparsely patterned zones.

The different zones in the outer portion 16 of the refining elements preferably are formed so that the width of

the bars substantially is equal while the spacing between the bars, i.e. the width of the grooves, varies.The ratio between the groove width in a more densely patterned zone 18,20,21,23 and an adjoining more sparsely patterned zone 17,19,22,24 should be between 1:1,25 and 1:1,75, preferably about 1,5. Suitable dimensions are a bar width of 1-3 mm and a groove width of 1-3 mm and a groove depth of 1-3 mm in a more densely patterned zone, and a bar width of 1-3 mm and a groove width of 1,5-5 mm in a more sparsely patterned zone.

As regards the groove depth, the ratio between the zones should be between 1:1 and 1:4. Suitable dimensions are a groove depth of 2-5 mm in a more densely patterned zone and 5-8 mm in an adjoining more sparsely patterned zone.

The number of zones in the outer portion of the refining elements can be varied, but the refining elements preferably are formed with two more densely and two more sparsely patterned zones.

Dams can be excluded entirely or be reduced in number, for example to one dam per groove in a more densely patterned zone.

It was found possible with this type of refining element to produce pulp with a very low shives content, below 0,15% at a freeness of 150 ml CSF, and an increased tensile strength (tensile index) at a lower specific energy input. It was observed that the energy level was lowered by up to 20%.

It was further possible to reduce the long fiber fraction (+30 mesh according to BMcNett) by 10-15% where the reduction to its greatest part applies to the fraction

+16 mesh. This can in certain cases be particularly advantageous, for example at the making of magazine paper.

The invention, of course, is not restricted to the embodiments described above, but can be varied within the scope of the invention idea.

Claims

1. A pair of co-operating refining elements (10,11) intended for a disc refiner to disintegrate and refine lignocellulosic material in a refining gap between two opposed refining discs rotating relative to each other, where the refining discs (10,11) are intended to be placed directly in front of each other on opposed refining discs, and both refining elements are formed with bars (12) and intermediate grooves (13) which in the outer portion (16) of the refining elements (10,11) are arranged in a number of limited zones (17-24) located radially outside of each other, c h a r a c t e r i z e d i n that each refining element (10,11) comprises at least one zone (18,20 and, respectively, 21,23) where the bars (12) are positioned more densely than in an adjoining zone (17,19 and, respectively, 22,24), and that these zones of greater density (18,20) on one refining element (10) are offset radially without overlapping in relation to the zones of greater density (21,23) on the other refining element (11).

2. A pair of refining elements as defined in claim 1, c h a r a c t e r i z e d i n that the bars (12) are arranged so that the ratio between the width of the grooves (13) in a more densely patterned zone (18, 20,21,23) and in an adjoining zone (17,19,22,24) is between 1:1,25 and 1:1,75, preferably about 1,5.

3. A pair of refining elements as defined in claim 1 or 2, c h a r a c t e r i z e d i n that the grooves (13) in a more densely patterned zone (18,20,21,23) are shallower than in an adjoining zone (17,19,22,24), and

that the ratio between the groove depths is between 1:1 and 1:4.

4. A pair of refining elements as defined in any one of the preceding claims, c h a r a c t e r i z e d i n that each groove (13) in a more densely patterned zone (18,20,21,23) includes at maximum one dam while adjoining zones include no dams.

5. A pair of refining elements as defined in claim 4, c h a r a c t e r i z e d i n that the more densely patterned zones (18,20,21,23) as well as the adjoining zones (17,19,22,24) include no dams.

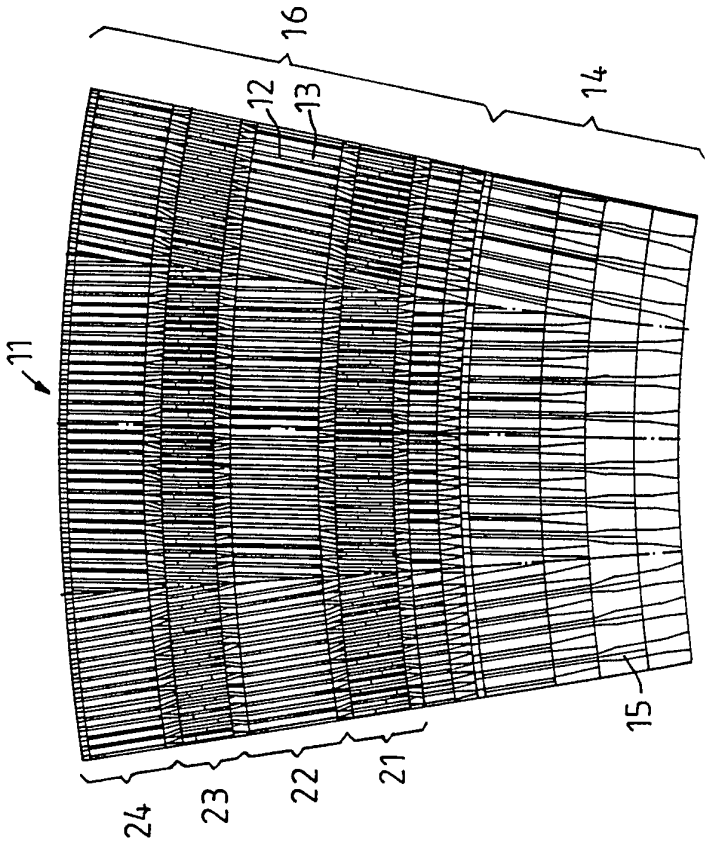


FIG. 2

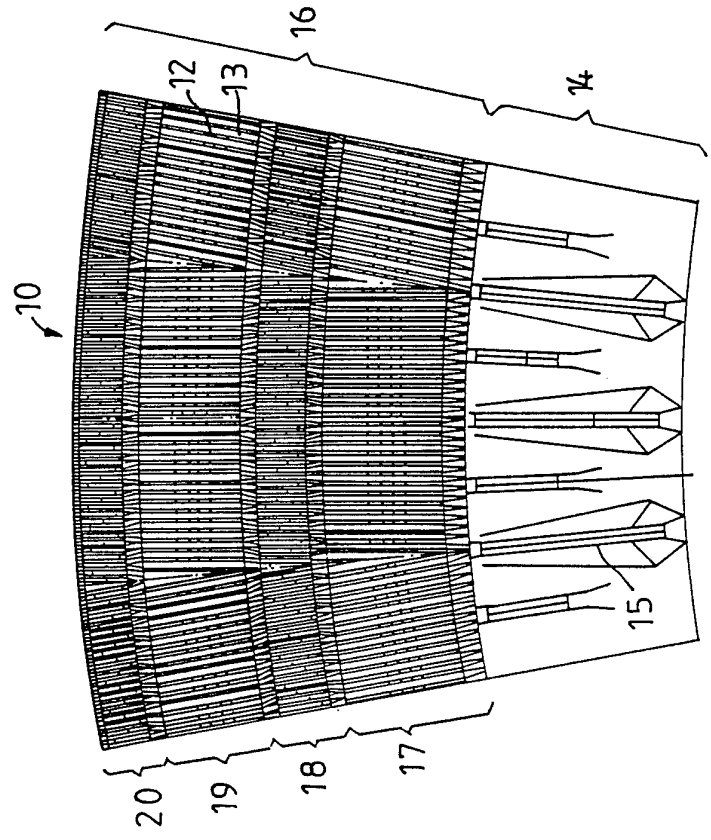


FIG. 1

# INTERNATIONAL SEARCH REPORT

International application No.
PCT/SE 95/00779

## A. CLASSIFICATION OF SUBJECT MATTER

IPC6: B02C 7/12, D21D 1/30
According to International Patent Classification (IPC) or to both national classification and IPC

## B. FIELDS SEARCHED

Minimum documentation searched (classification system followed by classification symbols)

IPC6: B02C, D21D

Documentation searched other than minimum documentation to the extent that such documents are included in the fields searched

SE,DK,FI,NO classes as above

Electronic data base consulted during the international search (name of data base and, where practicable, search terms used)

## C. DOCUMENTS CONSIDERED TO BE RELEVANT

| Category* | Citation of document, with indication, where appropriate, of the relevant passages | Relevant to claim No. |
|---|---|---|
| A | NO 148560 B (SCA DEVELOPMENT AKTIEBOLAG), 25 July 1983 (25.07.83), page 2, line 26 - page 3, line 18, figures 1,2 -- | 1 |
| A | SE 437226 B (SUNDS DEFIBRATOR AB), 18 February 1985 (18.02.85), page 2, line 31 - line 37, figure 3 -- | 1 |
| A | US 4166584 A (ARNE J.A. ASPLUND), 4 Sept 1979 (04.09.79), figure 4, abstract -- | 1 |

[X] Further documents are listed in the continuation of Box C. [X] See patent family annex.

* Special categories of cited documents:
"A" document defining the general state of the art which is not considered to be of particular relevance
"E" erlier document but published on or after the international filing date
"L" document which may throw doubts on priority claim(s) or which is cited to establish the publication date of another citation or other special reason (as specified)
"O" document referring to an oral disclosure, use, exhibition or other means
"P" document published prior to the international filing date but later than the priority date claimed
"T" later document published after the international filing date or priority date and not in conflict with the application but cited to understand the principle or theory underlying the invention
"X" document of particular relevance: the claimed invention cannot be considered novel or cannot be considered to involve an inventive step when the document is taken alone
"Y" document of particular relevance: the claimed invention cannot be considered to involve an inventive step when the document is combined with one or more other such documents, such combination being obvious to a person skilled in the art
"&" document member of the same patent family

| Date of the actual completion of the international search | Date of mailing of the international search report |
|---|---|
| 24 October 1995 | 26 -10- 1995 |
| Name and mailing address of the ISA/<br>Swedish Patent Office<br>Box 5055, S-102 42 STOCKHOLM<br>Facsimile No. +46 8 666 02 86 | Authorized officer<br>Wiva Asplund<br>Telephone No. +46 8 782 25 00 |

INTERNATIONAL SEARCH REPORT

International application No.
PCT/SE 95/00779

C (Continuation). DOCUMENTS CONSIDERED TO BE RELEVANT

| Category* | Citation of document, with indication, where appropriate, of the relevant passages | Relevant to claim No. |
|---|---|---|
| A | US 5248099 A (WILLIAM F. LAHNER ET AL), 28 Sept 1993 (28.09.93), figures 1,3, abstract<br><br>--<br>-------- | 1 |

# INTERNATIONAL SEARCH REPORT

Information on patent family members

02/10/95

International application No.
PCT/SE 95/00779

| Patent document cited in search report | Publication date | Patent family member(s) | Publication date |
|---|---|---|---|
| NO-B- 148560 | 25/07/83 | NONE | |
| SE-B- 437226 | 18/02/85 | AU-B,B- 568661 | 07/01/88 |
| | | AU-A- 3066484 | 25/01/85 |
| | | CA-A- 1250171 | 21/02/89 |
| | | EP-A,B- 0172830 | 05/03/86 |
| | | SE-T3- 0172830 | |
| | | SE-A- 8303560 | 22/12/84 |
| | | US-A- 4772358 | 20/09/88 |
| | | WO-A- 8500120 | 17/01/85 |
| US-A- 4166584 | 04/09/79 | AT-B- 366116 | 10/03/82 |
| | | AU-B,B- 503622 | 13/09/79 |
| | | AU-A- 1746676 | 09/03/78 |
| | | BE-A,A- 845813 | 31/12/76 |
| | | CA-A- 1063405 | 02/10/79 |
| | | CH-A- 615718 | 15/02/80 |
| | | DE-A- 2639786 | 17/03/77 |
| | | FR-A,B- 2322970 | 01/04/77 |
| | | GB-A- 1553296 | 26/09/79 |
| | | JP-A- 52037801 | 24/03/77 |
| | | NL-A- 7609836 | 08/03/77 |
| | | SE-B,C- 418812 | 29/06/81 |
| | | SE-A- 7509904 | 06/03/77 |
| US-A- 5248099 | 28/09/93 | NONE | |