April 7, 1970 D. G. OGLE 3,504,799

SAMPLE INJECTOR

Filed April 2, 1968 6 Sheets-Sheet 1

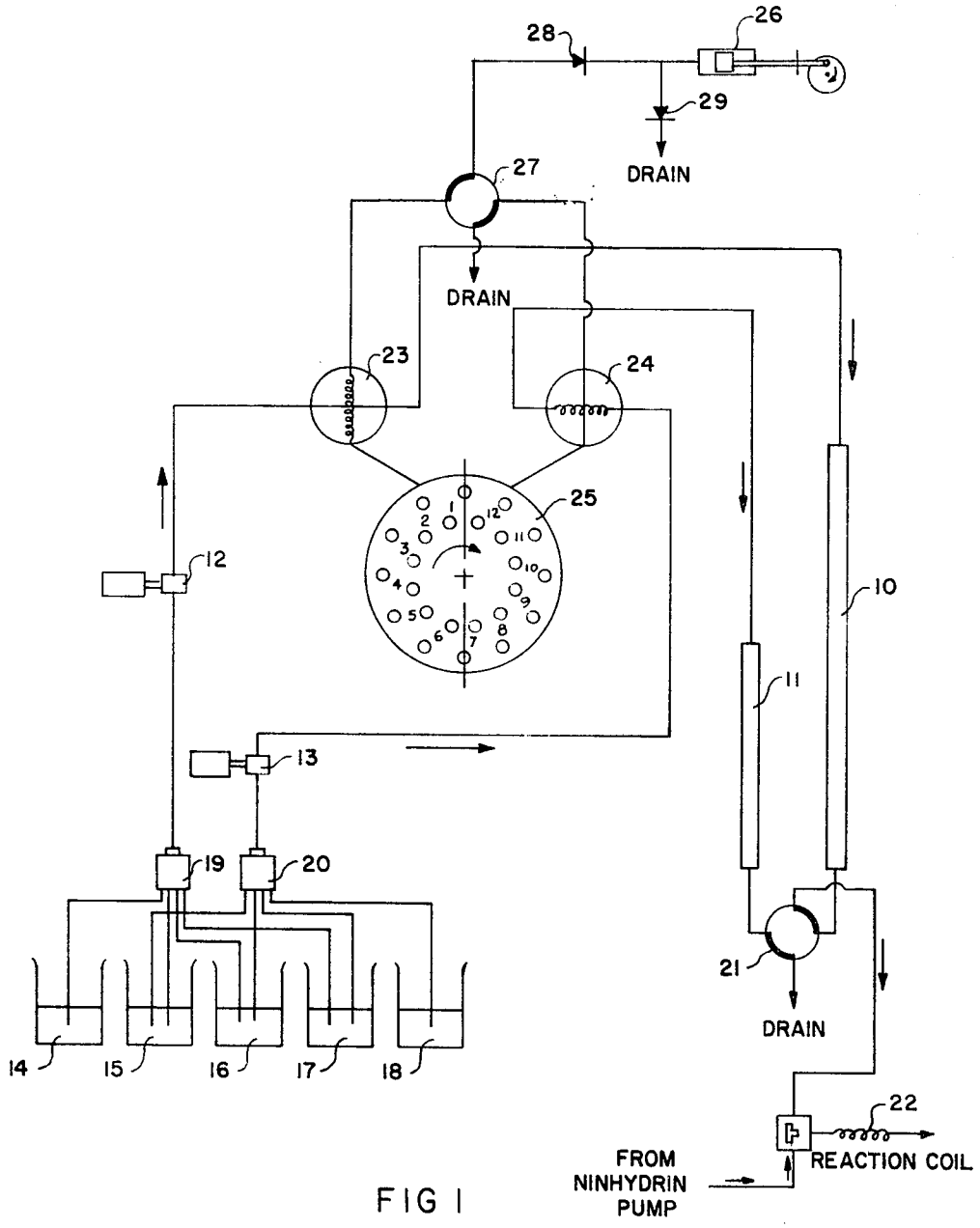

FIG 1

INVENTOR.
DAVID G. OGLE
BY A. M. Fernandez
ATTORNEY

SAMPLE INJECTOR

Filed April 2, 1968 6 Sheets-Sheet 2

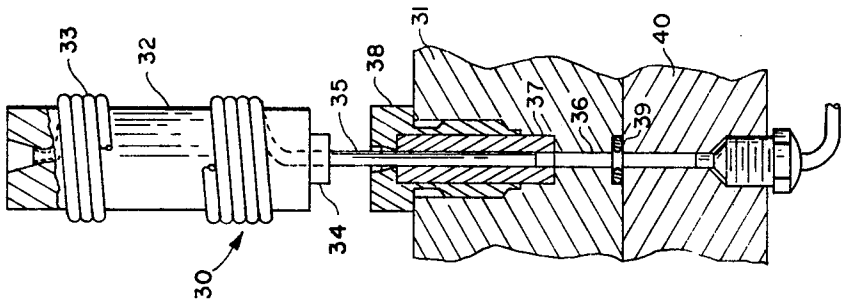

FIG 2

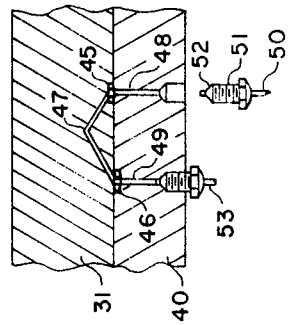

FIG 3b

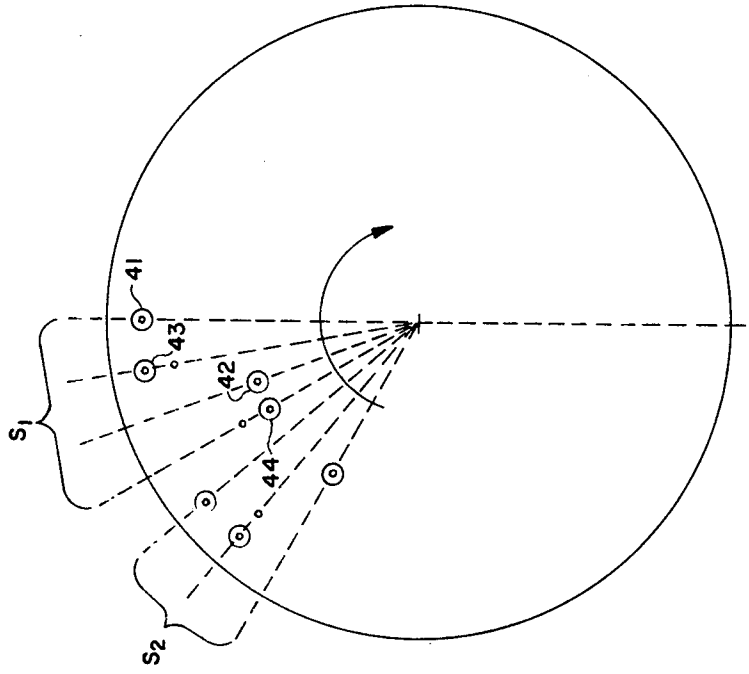

FIG 3a

April 7, 1970 D. G. OGLE 3,504,799

SAMPLE INJECTOR

Filed April 2, 1968 6 Sheets-Sheet 3

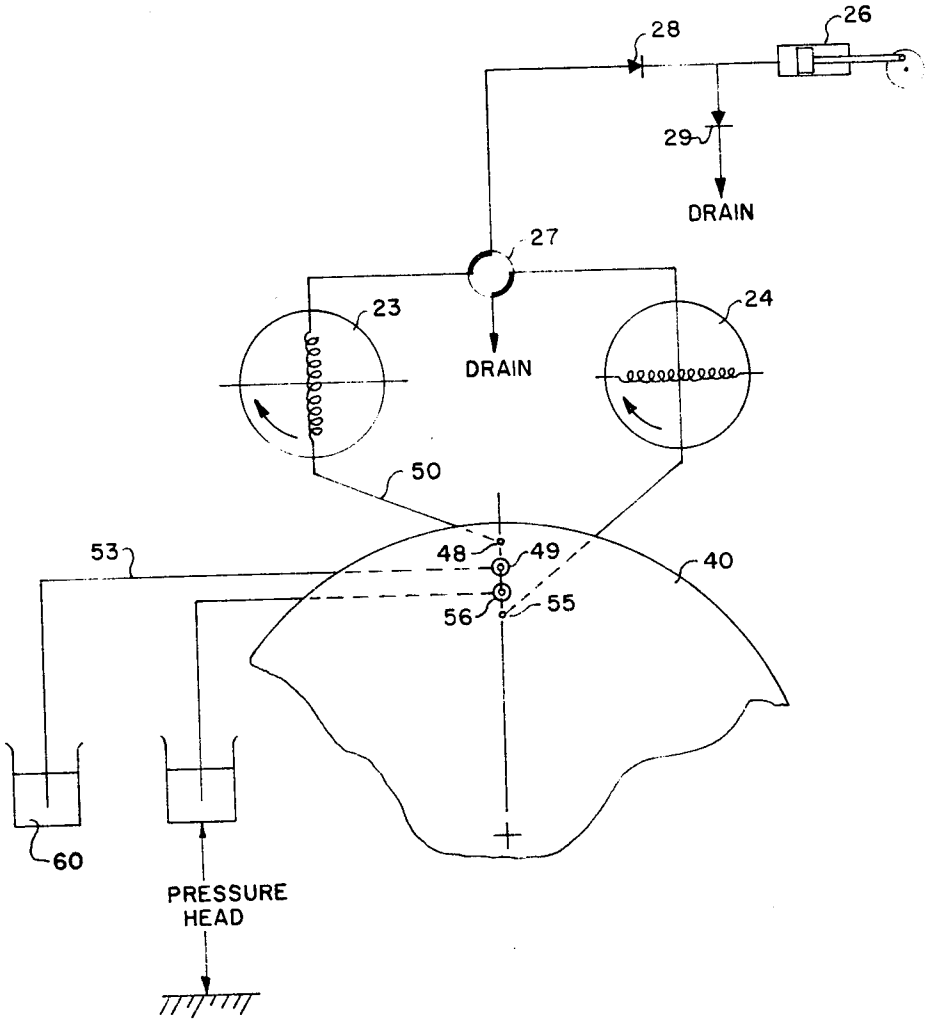

FIG 4

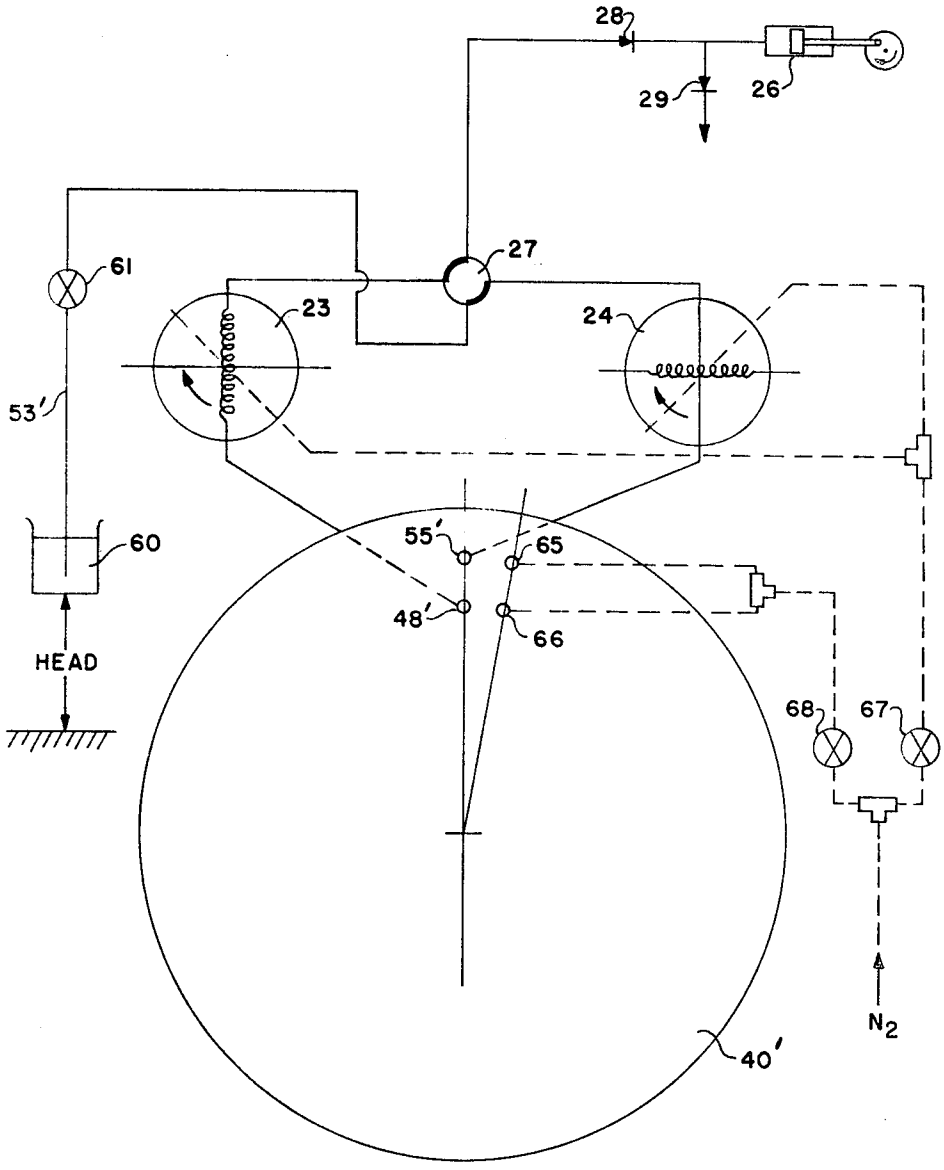

FIG 5

April 7, 1970 D. G. OGLE 3,504,799

SAMPLE INJECTOR

Filed April 2, 1968 6 Sheets-Sheet 5

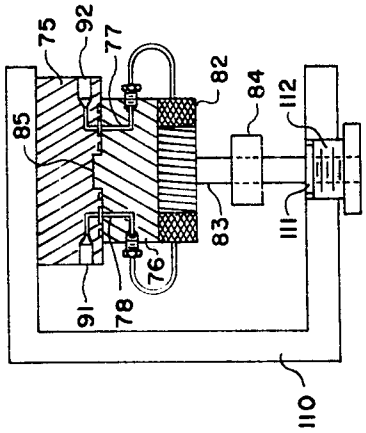

FIG 7

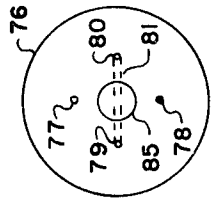

FIG 11

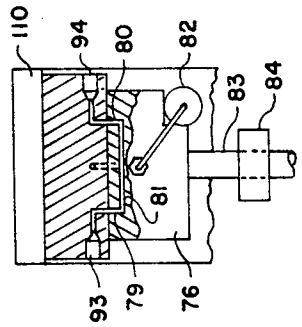

FIG 8

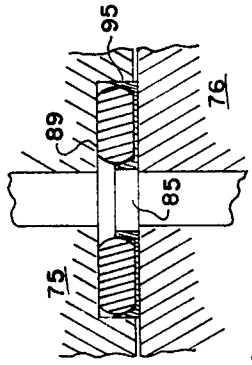

FIG 12

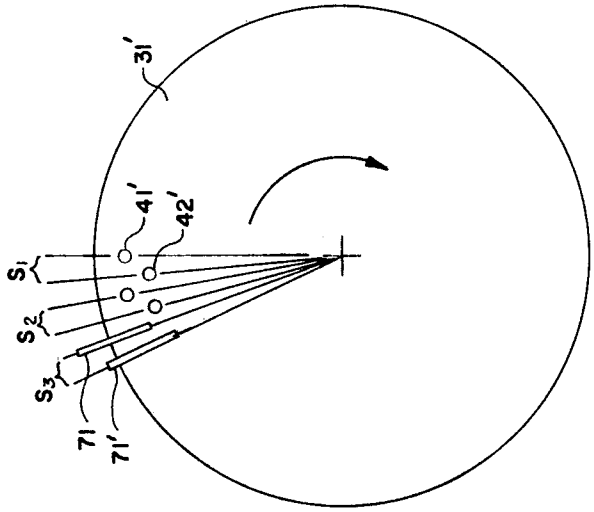

FIG 6b

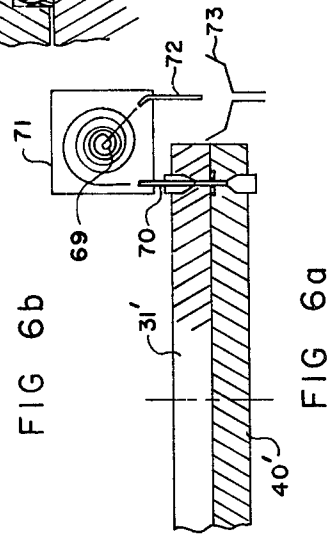

FIG 6a

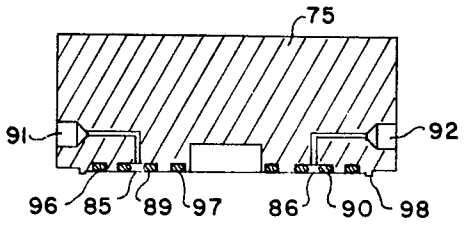
75
91
92
96
85
89
97
86
90
98

FIG 10

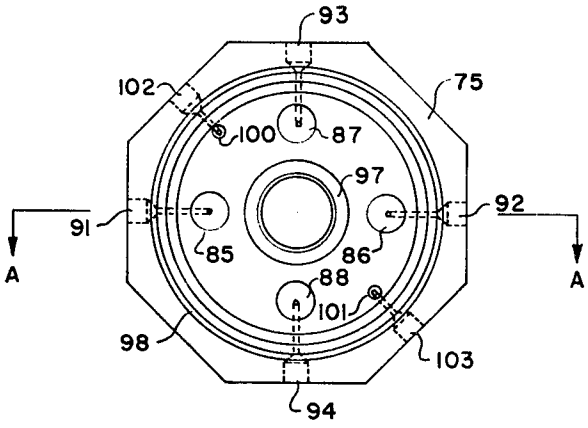
93
102
75
100
87
97
91
92
85
86
A
A
88
101
98
103
94

FIG 9

United States Patent Office

3,504,799

Patented Apr. 7, 1970

3,504,799

SAMPLE INJECTOR

David G. Ogle, Sunnyvale, Calif., assignor to Beckman Instruments, Inc., a corporation of California

Filed Apr. 2, 1968, Ser. No. 718,166
Int. Cl. B01d *15/08*
U.S. Cl. 210—198 16 Claims

ABSTRACT OF THE DISCLOSURE

A sample injector for ion exchange chromatography employing rotary, high pressure, shear-type valves for measuring a quantity of sample into each of the sample loops while the valve associated therewith is in one of two positions and connecting the sample loop to the head of a resin packed column in series with a suitable eluent while the valve associated therewith is in the other position. Shear-type annular seals made of resilient material are employed between the flat shear-type valve faces of the rotary sample injecting valves. Each seal includes an annular cap of low friction plastic material to provide a wear resistance sealing face against an opposing valving face. The annular cap includes sidewalls on the inside and outside circumferences to constrain the annular seal of resilient material to the space therebetween. A gap is maintained between the shear-type valve faces to prevent smearing one face with the sample in the measuring loop carried by the other face. Samples are stored in rows on a rotary table which is stepped to sequentially connect samples to the high pressure sample injecting valves. When a sample measuring loop is in line with a sample reservoir on the rotary table, a transfer pump draws sample out of the reservoir into the measuring loop.

BACKGROUND OF THE INVENTION

Field of the invention

This invention relates to a sample injector for ion exchange chromatography and in particular to a sample measuring and injecting valve for precisely measuring from a plurality of sample reservoirs an amount of sample from each in sequence, samples thus measured being introduced into an ion exchange column by an eluent under high pressure.

Description of the prior art

In an ion exchange chromatograph, it is desirable to be able to inject into a resin-packed column a plurality of measured samples in sequence in such a manner that the flow rate of eluate is maintained constant at all times, even during the addition of a sample in order to obtain a steady baseline as taught by Arthur M. Crestfield in an article entitled "Sample Injector for Ion Exchange Chromatography and Flow Cell for Continuous Photometry at 210 Millimicrons" published in Analytical Chemistry, vol. 35, October 1963, at pp. 1760–3.

The problem is one of depositing a measured quantity of dissolved sample material onto a resin-packed column, and then eluting it with the appropriate buffers. The technique employed by Mr. Crestfield to keep the flow rate constant at all times involves manual procedures utilizing bypass tubing with pinch clamps applied thereto to direct the flow of eluate therethrough while the coil of tubing is loaded with a predetermined quantity of sample, whereupon the pinch clamps are manipulated to redirect the eluate from the bypass through the sample coil.

Another method which has been employed requires storing predetermined quantities of samples in small, resin-packed cartridges mounted in a rotary table such

that the cartridges are sequentially moved into position as an extension of the chromatograph column. Still another method which has been suggested is to store predetermined quantities of samples in small tubes not packed with resin but mounted on a movable plate such that the small tubes are sequentially placed in the high pressure eluent.

Still other configurations have been developed for storing samples in loops or coils and sequentially indexing each sample loop or coil into a high pressure line connected to the column head. However, these also require pre-measuring the sample material into the loop or coil, or require T's in the filling lines, thereby retaining the human error factor which weights so heavily in an analytical process that requires precision with a high degree of repeatability. Moreover, such configurations would not readily lend themselves to use in a fully automated system, particularly since they would require disassembly of the high pressure area each time it is required to load a new sample into a storage loop or coil. These and other limitations of the prior art led to the development of the present invention employing an improved, low pressure sample measuring and high pressure sample injecting valve.

SUMMARY

The present invention consists of a high pressure sample injecting valve connected to a low pressure, gross sample storage system and a high pressure sample injecting system consisting of a source of eluent under high pressure leading to the sample injecting valve and a passage from the sample injecting valve to the head of a column packed with ion exchange resin. A rotary table is provided in the low pressure system to store a plurality of samples, each loaded in gross into a storage loop or coil having one end open to atmosphere and the other end inserted into one of a plurality of bores in a movable plate, the movable plate being provided on the opposilte side thereof with a stationary plate, both plates having opposing valving faces. Annular seals made of resilient material are placed in counterbores to seal the passages through the movable plate except when aligned with one of a pair of bores in the stationary plates which are connected to separate ones of a pair of sample injecting valves. A second pair of bores are provided in the stationary plate of the sample storage table in order to wash system passages connected thereto with a fluid. In one embodiment, the system passages are located in the sample storage table and are washed with a drying gas such as nitrogen at 5 p.s.i.g., the sample measuring passages of the system leading to the sample injecting valve having been previously washed with a buffer solution without indexing the movable plate after measuring a sample. In that embodiment, the buffer for washing the passages is directed first through a bypass in the sample injecting valve, through the sample storage table and out to drain through the sample storage coil or loop.

The high pressure sample injecting valve consists of a stationary plate and a rotary plate. Both plates are provided with a closed flat, shear-type valve face. Four bores in the rotary plate are disposed equidistant from its center of rotation, a first pair of bores terminating at points in the valve face and aligned on a first line passing through the center and opposite sides thereof. The second pair of bores terminate at ports in the valve face aligned on a second line passing through the center and on opposite sides thereof. The second line passing through the second pair of bores is angularly displaced from the first line, preferably by 90°. A bypass is provided in the rotary plate connecting the second pair of bores. The first pair of bores in the rotary plate are connected by the sample metering chamber preferably consisting of a Teflon loop

potted in epoxy resin. Third and fourth pair of bores terminating at ports in the valve face of the stationary plate are so disposed that for a given position of the rotary plate, the ports of the third and fourth pairs of bores are directly opposite the ports of the first and second pairs of bores. Counterbores on the valve faces of one of the plates, preferably the rotary plate, hold shear-type annular seals made of resilient material. Each rotary seal is covered with an annular cap of low friction plastic material to provide a wear resistant sealing face against the opposing valving face of the stationary member. Each annular cap includes sidewalls on the inside and outside circumferences, the walls being substantially normal to the wear resisting sealing face to constrain the annular seal of resilient material to the space in its counterbore to substantially that covered by the annular cap. A source of eluent under pressure is connected to one of the fourth pair of bores in the stationary plate of each of the two sample injection valves. The other one of the fourth pair of bores in each valve is connected by a conduit to the head of a column packed with ion exchange resin. A source of rinsing solution under pressure is connected by valving means to the sample metering system to allow flow of fluid therethrough in a selective manner which is when the sample injection valve has been rotated from its sample metering position (i.e., from its position in communication with a sample in the storage table) into its sample injection position which is with the bypass passage in communication with the sample storage loop or coil from which sample has just been measured for injection and with the sample metering loop in communication with the column head. In that manner, the sample metering passages between the sample injection valve and the sample storage table are washed before another sample reservoir is stepped into sample measuring position.

In the sample injection valve, a gap is maintained between the stationary and rotary plates in order to provide a space therebetween which first of all prevents smearing samples over the face of the stationary plate and then allows a washing fluid to be passed over the face of the stationary plate such as nitrogen at 25 p.s.i.g. A large O-ring is provided between the rotary and stationary plates to enclose that space being washed. A smaller O-ring is also provided to separate that space from the rotary shaft, or the equivalent thereof, at the center of the rotary plate. Inlet and outlet ports to that space are provided through the stationary plate, one port being connected to the source of washing fluid and the other communicating to drain or atmosphere.

Operation of the sample injecting valves is synchronized by suitable means such as a gear train or a common belt around pulleys attached to the rotary plates such that while the sample metering loop of one is connected to a port through the stationary plate of the sample storage table, the bypass of the other is connected to another bore through the stationary plate of the stand of the sample storage table. A transfer valve alternately connects a sample transfer pump to the sample injecting valve while the sample metering loop is in communication with the sample storage table. While one sample injecting valve is thus connected for the purpose of receiving a new sample, the transfer valve so connects the bypass in the other sample injecting valve as to provide a flow path for a wash solution to flow therethrough, in one embodiment from a source of such solution under pressure to the transfer valve, the bypass, sample storage table and out to drain through the sample storage loop or coil from which sample has just been taken. In another embodiment the solution flows first through the sample storage table and then the bypass before flowing to the transfer valve and from thence to drain.

BRIEF DESCRIPTION OF THE DRAWINGS

FIGURE 1 is a schematic two-column liquid chromatography system in accordance with the present invention in one embodiment.

FIGURE 2 illustrates the manner in which a sample coil is inserted into the top rotary plate of a sample table in the system of FIGURE 1.

FIGURES 3*a* and 3*b* illustrate details of the rotary top plate of the sample table of FIGURES 1 and 2.

FIGURE 4 illustrates in greater detail a portion of the system illustrated in FIGURE 1.

FIGURE 5 illustrates schematically a portion of a second embodiment of the present invention.

FIGURES 6*a* and 6*b* illustrate the manner in which a sample reservoir coil is mounted in a rotary plate of the sample storage table in the embodiment of FIGURE 5.

FIGURE 7 illustrates the sample injecting valve employed in the embodiments of FIGURES 1 and 5 with its rotary plate positioned for the operation of metering a sample from a reservoir coil on a sample table.

FIGURE 8 illustrates the sample injecting valve of FIGURE 7 with its rotary plate in position for injecting a metered sample into the head of a chromatograph column.

FIGURE 9 is a plan view of a fixed plate employed in the sample injecting valve of FIGURES 7 and 8 as viewed from the valving side thereof.

FIGURE 10 is a sectional view of the metering valve plate taken along the lines A—A of FIGURE 9.

FIGURE 11 illustrates the plan view of the rotary plate employed in the sample injection valve illustrated in FIGURES 7 and 8 as viewed from the valving face thereof.

FIGURE 12 illustrates a cross-sectional view of a shear-type annular seal seated in a counterbore of the sample injection plate illustrated in FIGURE 9 with an annular cap of low friction plastic material providing a wear resisting sealing face against the opposing valving face of the sample injection valve plate illustrated in FIGURE 11.

DETAILED DESCRIPTION OF PREFERRED EMBODIMENTS

In FIGURE 1 a two-column liquid chromatography system is shown employing a sample injecting system in accordance with the present invention. The total system is capable of performing any two-column analysis using the present methodologies which require a long column **10** and a short column **11**. It should be noted that the columns are independent of each other, with their own separate eluate pumps **12** and **13**. That allows for any series of step changes or gradient buffer elutions from reservoirs **14** to **18** through selector valves **19** and **20** connected to the pumps **12** and **13**. For example, step change buffer elutions may be utilized for amino acid analysis, followed by column regeneration with 0.2 N NaOH, and equilibration with starting buffers. Suitable valves for such purpose may be selected from those used in other systems, such as the buffer selector valve disclosed by Karl Dus et al., in an article entitled "Continuous Amino Acid Analysis-Elution Programming and Automatic Column Selection by Means of a Rotary Valve" published in Analytical Biochemistry, vol. 14 (1966) at pp. 41–52. That valve is of the rotary type capable of selectively connecting any one of four inlets to one outlet. Thus, any one of four fluids may be selected for delivery by the buffer pumps **12** and **13**. In the system illustrated, three is the maximum number of buffers required for a protein hydrolyzate analysis plus a column regeneration solution. However, it should be understood that the number of inlets in the selector valves **19** and **20** may be increased to any number required for other methodologies. The valves operate at low system pressure (0–2 p.s.i.g.) so that silicon O-ring seals prove entirely satisfactory. The shearing action of this rotary type valve switches incoming fluid streams with almost pure "plug-flow" characteristics, providing definitive step changes between fluids. However, multiple-ganged manifold systems which permit fluid mixing may be used in conjunction with or in place

of selector valves for linear changes as opposed to step changes between fluids.

The columns **10** and **11** perform independently of one another until the effluent has left the bottom of each. It then flows into a column effluent selector valve **21** to switch either column into a reaction coil **22**. The effluent selector valve is a 4-port, 2-way switching valve designed to operate at moderate system pressures (0–75 p.s.i.g.). For example, it may utilize a tapered Teflon plug in a fluorocarbon plastic body with internal porting of a configuration designed to reduce hold-up volume and fluid mixing. In that manner, manifolding of columns may be obviated.

Because of the flexibility available with switch valves **19**, **20** and **21** and automatic sample injecting valves **23** and **24**, such a two-column system is adequate to perform most analyses using overlap techniques which require regeneration and equilibration of the acidic column after each run as is known to those skilled in the art. By beginning the regeneration cycle immediately following the last amino acid separation leaving the bottom of the column, the normal "dead time" found at the end of a short-column run while waiting for a long-column equilibration may be reduced. However, to provide a system comparable to a three-column accelerated overlap procedure which eliminates such "dead time", a third long-column may be added such that one long-column is substituted for the other in the system illustrated in FIGURE 1 while the other is being regenerated. That may be readily accomplished by adding a selecting valve for the two long-columns at the head of both and another selecting valve to selectively connect the effluent of each to the effluent selecting valve **21**. In addition, a third pump is added to the column selecting valve, a high pressure valve, in order to be able to independently regenerate one column while the other is selectively connected to the sample injecting valve **23**. Thus, the third pump can be used in that configuration for regeneration and equilibration of both long-columns while the pump **19** is utilized as the eluent and sample injecting pump. The high pressure switching valve necessary to select the long-columns may be designed as a rotary shear-type valve similar to the sample injecting valves **23** and **24** to be further described with reference to FIGURES 7 to 12, but with internal porting similar to that schematically illustrated for the effluent selector valve **21**, which is with a second internal bypass in the rotary plate thereof in place of a sample metering coil.

Another arrangement of the system illustrated in FIGURE 1 could consist of a single buffer selecting valve for one of the two buffer pumps. That would enable one to perform two or four-hour protein hydrolyzate analyses on two columns. With the second buffer selector valve (for the second pump as shown in FIGURE 1), physiological fluid analyses and single (but overlapping) column runs can be made. Expanding the system still further in a manner previously described to add a second long-column two-hour, three-column, accelerated, overlapped hydrolyzate analyses may be run. Thus, the basic two-column system can be expanded to increase the number of runs per day or to change methodologies. However, it should be noted that the basic sample injecting system remains unchanged. The addition of a second long-column for accelerated, overlapped hydrolyzate runs simply requires that one sample injecting value supply the two long-columns. That minimizes calibration errors in chromatogram calculations and facilitates relating to sample volume required for the two long-columns since both will then be using the same sample metering coil.

The sample injecting system consists of the sample injecting valves **23** and **24** which alternately meter samples from reservoirs stored on a rotary sample table **25**. The sample injecting valve **23** is shown schematically in its sample metering position while the sample injecting valve **24** is shown in its sample injecting position. The reservoirs on the rotary table **25** are disposed thereon concentrically, a first group being disposed on a circle of larger diameter than the circle on which the second group is disposed. The sample injecting valve **23** sequentially samples from the first outer group of reservoirs while the sample injecting valve **24** samples from the second inner group of reservoirs. In this first embodiment, sample is drawn from a reservoir on the rotary table **25** into, for example, a sample metering loop or chamber in the sample injecting valve **23** by the syringe-type metering pump **26** through a selecting valve **27** as shown. A check valve **28**, or its equivalent, allows excess sample to flow into the pump **26**. When the pump is recycled for the next sample metering operation with the sample injecting valve **24**, the excess sample therein is ejected through a check valve **29**, or its equivalent, to drain.

In operation, the sample injection sequence starts by placing the system with the rotary table in position ready to load a sample in for example the sample injecting valve **23**. At that time, both sample injecting valves **23** and **24** are in the bypass position which is with the sample injecting valve **24** rotated 90° to a position corresponding to that of the sample injecting valve **23**. The sample transfer pump **26** is connected to the sample injecting valve **23** by the selecting valve **27** as shown. The transfer pump then draws in one stroke filling the metering coil or chamber in injecting valve **23**. As the pump **26** completes its cycle, to return to its initial position, any excess sample drawn into it through check valve **28** is ejected to drain through check valve **29**.

Once the sample injecting valve **23** has been loaded, a sequence using the long-column **10** may start. The pump **12** is first shut off to stop regeneration and equilibration thereof with starting buffers and the sample injector valve **23** is rotated 90° to place the sample metering loop between the pump **12** and the head of the column **10**. The pump **12** is then started again to inject the sample from injecting valve **23** into the column **10**. Alternatively, the pump **12** may be left on since starting buffer is connected thereto by selecting valve **19**. At the same time the sample table is rotated to a second position and the selecting valve **27** is rotated to its alternate position, a wash solution flows through a port in the second position in a manner to be described more fully hereinafter with reference to FIGURE 3*b* and from thence to drain through the bypass in the sample injecting valve **23**. The rotary sample table is then rotated to a third position which is equivalent to the first position but placing a sample reservoir from the second inner group in a position to be drawn into the sample injecting valve **24**. In that position the flow of wash solution through the sample injecting valve **23** is stopped, but by then the passages associated therewith for metering a sample have been sufficiently washed. The sample injecting valve **23** is then rotated another 90° to return it to the position shown for another sample metering operation.

To load column **11**, the sample injecting valve **24** stays in its alternate position, which is 90° from the position shown. Thereafter, the sequence of events is the same as for loading the column **10** through the sample injecting valve **23** such that the selecting valve **27** first connects the metering chamber of the sample injecting valve **24** to the transfer pump **26**, and then when the sample injecting valve **24** is rotated to the position shown, the selecting valve **27** connects the bypass passage of the sample injecting valve **24** to drain. Thereafter, when the rotary table steps to its next position to shut off the flow of wash solution, the sample injecting valve **24** is returned to the loading position with its sample metering chamber connected to the rotary sample table **25**.

It should be noted that once the sample is injected from the sample injecting valve to a column, the sample injecting valve is rotated 90° to place its bypass in line between its associated buffer pump and the head of its associated

column so that eluents pass straight through to the column. That leaves the sample metering chamber full of the buffer used to inject the previous sample into the column and the sample loading passages full of wash solution. However, upon loading the next sample into the metering chamber, the transfer pump **26** draws sufficiently to assure filling the metering chamber of the sample injecting valve with sample.

Since there may be some mixing of the sample with wash solution as the sample is drawn through the metering chamber, it is desirable to adjust the transfer pump **26** to draw sufficient sample from the reservoir to clear the metering chamber of any diluted sample. However, when working with small samples, it is not desirable to draw too much excess sample through the metering chamber. Accordingly, in order to adjust the transfer pump **26** to draw a minimum of excess sample through the metering chamber, it may be desirable to so pre-load the reservoirs before placing them on the table **25** that one or two slugs of air are drawn into the reservoir as they are filled from the bottom up by the suction of a syringe at the top thereof. The technique for this is simple since the reservoirs consist of fine bore Teflon tubing in a spiral or helical coil with the syringe at one end, the other end is dipped into the source of sample and when it has been filled by an amount slightly more than would be sufficient to fill the metering chamber of the sample injecting valves, the coil is withdrawn on from the source of the sample while some air is drawn into the coil. The coil is then dipped into the source of sample again to draw an additional amount of sample. A second slug of air may then be drawn into the coil in a similar manner for greater assurance that mixing will not take place between the sample and the wash solution when sample is drawn from the reservoir into the sample injecting valve.

It should be further noted that the sequence of events for the operation of the sample injecting valves, rotary table, buffer pumps, selecting valves, and the transfer pump **26** may be accomplished through a mechanical or electromechanical programmer (not shown) in order to obviate any possibility of error in the operation of those elements and, more importantly, to enable the system to sequentially process samples therethrough for analysis automatically. Many hours running into several days of automatic analysis of samples may be provided, the limit being simply the size of the rotary table **25** and size of the buffer reservoirs. No loss or contamination of sample will occur over such an extended period since each sample is stored in a small-bore tube and, if necessary, refrigeration may be readily added to an enclosure for the rotary table **25**. Another advantage of this sample injection system is that since the samples are stored on the table at atmospheric pressure, it is a simple matter to remove empty reservoirs therefrom and to replace them with reservoirs filled with additional samples without interrupting the automatic operation of the system. The programmer for providing automatic operation may be readily provided and adapted for the methodologies suggested hereinbefore and other methodologies known or yet to be developed. All that is necessary is an understanding of the basic sequence for metering and injecting samples.

In FIGURE 2, a helical coil is shown mounted on the rotatably movable plate **31** of the sample table **25** (FIGURE 1). This coil serves as a reservoir which is loaded with a sample prior to its being mounted on the table. It consists of a polyethylene spool **32** wrapped on the outside with a polyethylene or Teflon tube **33** having a nominal inside diameter of .025–.030 inch. A cap **34** on the bottom of the spool retains the lower free end of the tube and provides a means for connecting thereto a stainless steel needle **35** which, when inserted into the rotary table, is in alignment with a bore **36** having a silicon rubber plug **37** inserted in the counterbore and held therein by an acetal resin nut **38**. To facilitate inserting the stainless steel needle into the small bore of the silicon rubber plug **37**, the nut **38** is provided with a bore which is two to three times the diameter of the needle at the inlet thereof reducing down to slightly greater than the diameter of the needle at the outlet thereof.

The upper end of the tube **33** attached to the upper end of the spool **32** is preferably provided with a flared end in a fitting adapted to receive a syringe to fill it with sample. To accomplish that, the tip of the needle **35** is immersed into the sample contained in a small beaker. As the plunger of the syringe inserted into the top of th tube **33** is withdrawn, sample from the beaker fills the coil **30**.

Each sample to be analyzed is loaded into a separate reservoir coil before it is mounted on the sample table. No exact measurement of the quantity of sample is required since the sample injecting valves **23** and **24** shown in FIGURE 1 measure the correct amount of sample to be placed on the columns. In practice, the operator draws in sample to a certain point on the tube **33**, such as a line marked thereon which corresponds to an approximate volume of sample slightly greater than that required to load the sample metering chambers of the sample injecting valves. The end of the needle **35** is then lifted from the beaker and a small quantity of air corresponding to about ¼ inch of coil tube length is drawn in. The tip of the needle **35** is then reimmersed in the sample and another small quantity of sample corresponding to about ¼ inch of coil tube length is drawn in. In that manner, a segment or slug of air is provided at the bottom of the tube **33** so that when sample is drawn therefrom into the metering chamber of a sample injection valve, mixing of the sample with wash solution is prevented. The cycle may be repeated once more to insert a second slug of air to further minmize dilution of the original sample by mixing with a wash solution. However, by using a larger volume of sample to fill the metering chambers of the sample injector valve, this technique for preventing dilution or contamination of the sample may be omitted.

A shallow counterbore is provided for an O-ring **39** at the lower end of the bore **36** to provide a low pressure seal between the rotary plate **31** and a stationary plate **40**. Four bores spaced as shown in FIGURE 4 are provided in the lower stationary plate of the sample table. The rest of the sample table is flat and polished so that the lower end of the bore **36** for the sample reservoirs in the rotary plate **31** is sealed except when in proper alignment with a bore through the bottom stationary plate **40**.

The rotary top plate **31** illustrated in FIGURE 3*a* contains two positions **41** and **42** in each sector **43** for holding reservoir coils, each position consisting of a bore, silicon rubber plug and acetal resin nut as illustrated in FIGURE 2. For convenience, only two sectors S_1 and S_2 are shown in FIGURE 3*a*. The first position **41** of each sector is disposed on a circle of greater diameter than the circle upon which the second position **42** is disposed. As the plate **40** rotates in a clockwise direction, a second pair of positions **43** and **44** are brought into alignment with respect to the stationary lower plate **40** previously held by positions **41** and **42**. The positions **43** and **44** each comprise a bypass **47** illustrated in FIGURE 3*b*. When in alignment with bores **48** and **49** of the stationary plates shown in FIGURE 4, the bypass **47** is in communication with one of two pair of bores.

An O-ring **45** in a counterbore on the top plate **31** provides a seal between the rotary and stationary plates while an O-ring **46** in a counterbore in the stationary plate **40** provides a seal at the other end of the bypass **47**. The bore **48** of the first pair of bores in the stationary plate associated with positions **41** and **43** of the rotary plate is provided at the lower end thereof with a threaded counterbore adapted to receive a Teflon tube passing through, for example a nylon screw having a Teflon ferrule. The upper and lower plates may be made of such

noncorrosive material as acrylic resin, polyethylene or fluorocarbon plastic. In that manner, a noncorrosive passageway is provided from the stainless steel needle of the reservoir to the sample injector valve. The second bore **49** is similarly provided with a threaded counterbore for receiving a Teflon ferruled screw carrying a Teflon tube **53** which receives a wash solution under pressure which will be described more fully with reference to FIGURE 4. The second pair of bores **55** and **56** of the stationary plate are similar to the respective bores **48** and **49**.

Referring now to FIGURES 3*a* and 4, it may be seen that as the rotary plate **31** shown in FIGURE 3*a* is rotated in a clockwise direction, a bore **41** of the first sector S_1 is moved from a position in registration with the bore **48** in the stationary plate to bring the second position **43** having the bypass **47** in registration with the bores **48** and **49**. Thus, the first position **41** is in registration with the bore **48** of the stationary plate **40** in order to be able to draw a sample from the reservoir stored in position **41** into a sample metering loop or chamber in the sample injecting valve **23** in communication with the bore **48** through a Teflon line **50**. Once loaded with sample, the sample injecting valve **23** is rotated 90° to place the sample metering chamber thereof in communication with column **10** as described hereinbefore with reference to FIGURE 1. That places the bypass of the sample injector valve **23** in communication with the Teflon line **50**. The rotary plate **31** of the sample table is then stepped to its next position which is with position **43** in registration with the bores **48** and **49** of the stationary plate **40**, thereby placing the bypass **47** thereof in the rotary plate in communication with the bores **48** and **49**. The selector valve **27** is also rotated 90° to place the sample injecting valve **23** in communication with a drain. A wash solution from a reservoir **60** under a small head pressure then flows through a line **53** and the line **50** to the bypass of the sample injecting valve **23** and from there to drain, in that manner washing from the line **50** any traces of sample. The rotary plate **31** of the table is then stepped to its next position thereby shutting off flow of wash solution to the line **53** and placing position **42** of the sector S_1 in alignment with port **55** of the stationary plate **40**. The selecting valve **27** is then rotated another 90° to connect the sample injecting valve **24** in communication with the transfer pump **26**. A sample may then be drawn from a reservoir placed in position **42** of the rotary plate when the sample injecting valve **24** is rotated 90° from the position shown in FIGURE 4.

Once a sample is drawn into a sample injecting valve and transferred therefrom to the head of a column, it should be noticed that the metering chamber of the sample injector valve is free of any traces of sample because the buffer employed to transfer the sample to the column as described hereinbefore with reference to FIGURE 1 flushes the metering chamber and leaves it full of buffer solution. Therefore, once the sample injection into the column has been completed, the sample injecting valve is rotated 90° to place the sample loop or metering chamber in proper position for receiving another sample. Buffer solutions to the column are then provided through the bypass as shown for the sample injecting valve **23** in FIGURE 1. In that manner, samples are alternately metered by the sample injecting valves **23** and **24** as the rotary plate **31** of the storage table is stepped, one sample for every alternate position, the intermediate position being used to run a wash solution through a sample injecting valve to drain via a transfer valve **27**. A separate wash buffer source is connected to the bore **56** by a line similar to a line **53** connecting a source **60** to bore **49**.

The advantage of having two sample injector valves is that while one column is being regenerated and equilibrated the other is being employed to complete a run with respect to one sample. At the completion of the run, the operations are reversed on the two columns. The sample injecting valve accurately measures the sample when it rotates from the position shown for the sample injecting valve **23** to the position shown for sample injecting valve **24**, thereby relieving the operator of the burden since he must now only measure an approximate quantity of sample when he fills the sample reservoirs placed on the table. The sample volume is established by the size of the metering chamber or coil which may be readily changed. Therefore, different sample volumes may be readily employed for the different columns by simply selecting the proper volume for the metering chambers of the sample injecting valves **23** and **24**. For instance, referring to FIGURE 1, sample injecting valve **24** associated with the short column **11** may be provided with a relatively small metering chamber for the first outer group of reservoirs stored on the rotary table **25** and a larger metering chamber for sample injecting valve **23** associated with the longer column **10** for the second inner group of reservoirs stored on the rotary table **25**. However, the stroke of the transfer pump **26** must then be set for the larger sample, or to conserve sample in the case of the smaller sample desired, the length of the stroke must be programmed. That may be readily done by using a cam driven pump with a solenoid variable stop.

To load new samples on the table, it is a simple matter to lift the empty reservoirs (sample coils from which samples have been drawn into sample injecting valves) and to insert in place thereof other reservoirs freshly filled with new samples without interrupting operation of the sample injecting system since the high pressure portion of the system is not involved in any way with sample storage and metering, only with sample injecting through passages which at no time are ever connected to bores in the sample storage table. Thus, all loading of sample is done at atmospheric pressure while sample injection is done at the high pressures normally used in liquid chromatography (upwards of 750 p.s.i.g.). Repeatability of the system is high because the same high pressure loop is used for each sample measurement and injection into the column. Since the system lends itself to automatic operation through the provision of suitable motors and drive trains with some sequencing or programming control, technician time may be greatly reduced because once the sequence has been established and the system set up for operation, the technician is required only for the purpose of removing empty reservoirs and placing newly filled reservoirs on the sample table. The use of rotary valves and a rotary sample table will facilitate providing a suitable drive mechanism. Even the transfer pump **26** which is linear may be operated by a rotating element as suggested in the drawings since various ways are known to those skilled in the art for producing reciprocating motion from rotary motion. Independent valve operation permits column overlapping to enhance the analysis procedures, and even permits only one column to be used even though two are provided by skipping the operations associated with one of the sample injecting valves, such as the operations of the transfer pump **26** and selecting valve **27**.

FIGURE 5 illustrates a second embodiment of the present invention wherein like components are identified by the same reference numerals as employed in the first embodiment as illustrated in FIGURE 4. A major advantage is that only one pair of bores **48'**, **55'** is provided in the stationary plate **40'** of the sample storage table. The second pair of bores **49** and **56** provided in the embodiment of FIGURE 4 is omitted in the embodiment of FIGURE 5 since a wash solution, introduced over a line **53'** from a source **60**, through a valve **61** (which may be solenoid actuated, for example, to faciliate programming) is selectively run through either the sample injecting valve **23** or the sample injecting valve **24** as determined by the position of the selecting valve **27**, but in the opposite direction therethrough to the ports **48''** and **55''** and from thence through sample reservoir placed on the rotary plate **31'** as illustrated in FIGURES 6*a* and 6*b*.

The production economy and improved reliability achieved through the use of a single wash source in the embodiment of FIGURE 5 is made possible by the discovery that de-ionized water is a satisfactory fluid to use as a wash, and actually better than buffer wash, which then gives rise to a separate wash source for each column, since no salt deposit would occur after evaporation. Moreover, the de-ionized water which remains in the bypass of the sample injecting valve, which is later driven through the column during elutriation, does not materially affect the chromatogram. However, two separate sources of wash buffers may be employed as in the embodiment of FIGURE 4, each wash buffer being properly selected for the analyses being conducted with the column associated with the sample injection valve being washed. For that purpose, another valve should be provided to selectively connect the second buffer wash source to a T in the line between the control valve **61** and the selecting valve **27**. Similarly, the embodiment of FIGURE 4 may be modified to employ a single source of wash.

Another pair of bores **65** and **66** are provided in the stationary plate **40'** to the right of the bores **55'** and **48'** so that as the rotary plate **31'** of the sample storage table rotates clockwise, the bores thereon carrying the sample reservoirs come in communication therewith in order that nitrogen gas may be run therethrough at approximately 5 p.s.i.g. Nitrogen gas is also applied to the sample injecting valves **23** and **24** at 25 p.s.i.g. in a manner to be described hereinafter with reference to FIGURES 11 through 12. Valves **67** and **68** are provided to selectively apply nitrogen gas at appropriate pressures to the sample injecting valves **23** and **24** and the ports **65** and **66** in the stationary plate of the rotary table. It should be noted that when nitrogen gas is applied to the ports **65** and **66**, a sample reservoir which has been washed is in communicaion therewith.

FIGURE 6*a* shows the manner in which sample reservoirs may be formed in a spiral configuration instead of the helix configuration of FIGURE 2 and mounted on the rotary plate **31'** of the sample storage table. One end of the spiral coil is connected to a stainless steel tube **70** and inserted into the rotary plate **31'** in the same manner as described hereinbefore with reference to FIGURE 2. The stainless steel needle is fixedly attached to a flat plastic plate **71** to which the spiral coil is secured, as by an epoxy resin. The other end of the spiral coil is taken from the center thereof and connected to a second stainless steel needle **72** fixedly attached to the plastic plate **71**. When in proper position on the rotary plate **31'**, the stainless steel needle **72** is over a drain **73** to receive the wash solution which flows back through the sample injecting valve **23** in a manner described hereinbefore with reference to FIGURE 5.

FIGURE 6*b* illustrates the manner in which the plate **71** shown in FIGURE 6*a* is positioned on the rotary plate **31'** with its stainless steel needle **70** in one of an outer group of bores **41'**. A second sample storage plate **71'** is placed with its stainless steel needle in an inner group of bores **42'**. Only a few bores **41'** and **42'** are shown for convenience, although there are two for each of the equal sectors S_1, S_2, S_3 . . . of the rotary plate **31'**. The drain **73** shown in FIGURE 6*a* is made sufficiently wide to receive the wash solution from a reservoir stored in either a bore of the inner group or of the outer group.

Since the wash solution is directed to drain through the sample reservoir carried by the rotary plate **31'** of the sample table, there is no need for passageways corresponding to those connected to bores **43** and **44** in the first embodiment as illustrated in FIGURES 3*a* and 3*b*. Accordingly, the sectors of the rotary table **31'** are half the size of the corresponding sector of the rotary table **31** of the first embodiment which means firstly that twice as many samples may be carried (seventy-two for the example illustrated) and secondly that the rotary table need be stepped only one position for processing each sample, instead of two.

Referring now to FIGURES 7, 12, the high pressure sample injecting valves **23** and **24** consist of a stationary plate **75** and a rotary plate **76**, each having opposed flat, shear-type valve faces. A plan view of the valve face for the stationary plate is shown in FIGURE 9 and the corresponding view of the rotary plate is shown in FIGURE 11 to half the scale of the stationary plate. The rotary plate **76** has four bores disposed therein an equal distance from an axis of rotation, a first pair of bores terminating at ports **77** and **78** in the valve face and aligned on a first line passing through the center and on opposite sides thereof and a second pair of bores terminating at ports **79** and **80** in the valve face aligned on a second line passing through the center and on opposite sides thereof, the second line being angularly displaced from the first line, preferably by an angle of 90°. A bypass **81** shown more clearly in FIGURE 8 interconnects the second pair of ports **79** and **80** directly, and a sample metering chamber **82** interconnects the first pair of ports **77** and **78**. A driveshaft **83** or other suitable means is connected to the rotary plate **76** in order to rotate it with respect to stationary plate **75**. A drive system **84** is connected to the shaft **83** to rotate it in the one direction 90° at a time. That drive system may consist of a gear train, a belt and pulley or a step motor directly driving the shaft **83**. A raised portion **85** in the center of the valve face of the rotary plate as shown in FIGURE 11 fits into a corresponding recess in stationary plate **75** as shown in FIGURE 7. In that manner, alignment of the rotary plate with the stationary plate remains fixed in order that the ports **77** to **80** of the rotary plate will properly register for communication with third and fourth pair of bores terminating at ports **85** to **88** shown in FIGURE 9.

Each of the ports **85** to **88** is counterbored in order to receive shear-type annular seals such as O-rings **89** and **90** made of resilient material as shown in FIGURE 10. An annular cap **95** of low friction plastic such as Teflon is placed over each O-ring to provide a wear resisting sealing face against the opposing valving face of the rotary plate **76** as shown in FIGURE 12 for the port **85**. A small gap is maintained between the plates **75** and **76**, as shown in FIGURE 12, as by a raised annular portion **98** shown in FIGURES 9 and 10 in order that as the plate **76** is rotated, sample in the metering loop or chamber **82** shown in FIGURES 7 and 8 will not smear the plates **75** and **76**. The annular cap includes side-walls on the inside and outside circumferences thereof, each wall being substantially normal to the wear resisting sealing face thereof to prevent the resilient annular seal in the counterbore from being forced into the area of the bore while under compression alone and while also subject to shear stress as developed by rotating the rotary plate **76**. It also prevents the annular seal **89** from being forced into the gap area while under compression alone and while also subject to shear stresses developed by rotating the rotary plate **76**.

The ports **85** to **89** of the stationary plate **75** communicate with bores extending through the plate **75** to threaded counterbores **91** to **94** adapted to receive Teflon tubes with fittings of the type described with reference to FIGURE 3*b*. For convenience in mounting the stationary plate to a supporting frame, the bores extend to the ports **91** to **94** on the sides of the stationary plate **75** instead of on the face opposite the valving face but that is only as a matter of design since stationary plates may just as readily be supported from the sides.

The ports **91** and **92** are connected to a port in stationary plate of the sample table **25** and of the transfer valve **27**, respectively, as schematically illustrated in FIGURE 1 for the sample injection valves **23** and **24**. Similarly, the ports **93** and **94** are connected to a buffer pump **12** or **13** and the head of a column **10** or **11**, respectively, again as schematically illustrated in FIGURE 1.

The space between the stationary plate **75** and the rotary plate **76** of the sample injection valve is sealed by a first O-ring **96** placed in an annular ring surrounding the ports **85** to **88** as shown in FIGURES 9 and 10 and by a second O-ring **97** in an annular groove concentric with the groove for the O-ring **96** but inside the ports **85** to **88**. Annular caps of low friction plastic material may be provided over the O-rings **96** and **97** as for the O-rings surrounding the ports **85** to **88**, but that is not necessary because the O-rings surrounding the ports **81** to **84** provide a perfect seal so that the space between the stationary plate **75** and the rotary plate **76** isolated by the O-rings **96** and **97** is at a relatively low pressure.

Additional ports **100** and **101** are provided on the valving face of the stationary plate **75** as shown in FIGURE 9 each communicating through a bore in the plate to threaded counterbores **102** and **103**, respectively, adapted to receive tube fittings through which nitrogen gas at 25 p.s.i.g. is conducted into the space to the port **100** and out to the atmosphere through the port **101** in order to keep the enclosed space between the plates **75** and **76** clear of any sample or wash fluids. Although this feature has been illustrated only with reference to FIGURE 5, it should be understood that it is equally applicable to the embodiment illustrated in FIGURES 1 and 4.

A frame **110** is shown in FIGURES 7 and 8 supporting a sample injecting valve. The stationary plate is directly attached to the upper port of the frame while the rotary plate **76** is attached to the lower port of the frame by a collar **111** resting on a thrust bearing **112** threaded into the frame. The bearing **112** comprises a nut having a bore through which the drive shaft **83** extends. By adjusting the position of the nut or threaded thrust bearing, the desired pressure of the rotary plate **76** against the stationary plate may be adjusted. A similar, but inverted support and thrust bearing arrangement may be provided for the stationary and rotary plates of the sample table. However, in each instance, the arrangement suggested is by way of example only since other arrangements will suggest themselves to those skilled in the art depending upon the environment and operating conditions of particular applications. The same is true of other parts of the system.

What is claimed is:

1. A sample injecting system for precisely measuring from a reservoir an amount of said sample and introducing it into a chamber comprising

a high pressure sample injection valve having a stationary plate and a rotary plate, said plates having opposed flat, shear-type valve faces,

said rotary plate having four bores therein disposed an equal distance from its center of rotation, a first pair of bores terminating at ports in the valve face and aligned on a first line passing through said center and on opposite sides thereof, and a second pair of bores terminating at ports in the valve face aligned on a second line passing through said center and on opposite sides thereof, said second line being angularly displaced from said first line,

a passage directly connecting said second pair of bores,

a sample chamber having two ports respectively connected to said first pair of bores in said rotary plate, said sample chamber and said first pair of bores defining a sample meter chamber,

third and fourth pairs of bores terminating at ports in the valve face of said stationary plate so disposed that for a given position of said rotary plate the ports of said third and fourth pairs of bores are directly opposite the ports of said first and second pairs of bores,

counterbores on the valve face of one of said plates, one counterbore concentric with each port thereof,

shear-type annular seals made of resilient material, one seal seated in each counterbore,

a first conduit connecting a given one of said sample reservoirs to one of said third pair of bores in said stationary plate and a second conduit connecting the other one of said third pair of bores to a drain, and means for providing a pressure differential between said first and second conduits at ports of said third pair of bores whereby sample flows from the reservoir to the drain when valving ports of said first pair of bores are opposite valving ports of said third pair of bores, to fill said metering chamber with sample,

a source of eluent under pressure,

a third conduit connecting one of said fourth pair of bores in said stationary plate to the head of said chamber and a fourth conduit connecting the other one of said fourth pair of bores to said source of eluent whereby sample is injected into said chamber for elutriation by said eluent when valving ports of said first pair of bores are opposite valving ports of said fourth pair of bores,

a source of rinsing solution under pressure,

valve means in one of said first and second conduits for interrupting flow of fluid between said reservoir and said drain, and connecting said source of rinsing solution thereto for washing said first conduit and said third pair of bores in said stationary plate when said rotary plate is in a position which places said passage therein between said third pair of bores.

2. A sample injecting system as defined in claim **1** wherein each of said seals includes an annular cap of low friction plastic material to provide a wear resisting sealing face against an opposing valving face.

3. A sample injecting system as defined in claim **2** wherein a gap is maintained between said stationary and rotary plate to provide a space therebetween,

a pair of passages in one of said plates communicating from the outside thereof to said space, and

a large O-ring between said plates to seal from the outside said space within the circumference of the O-ring.

4. A sample injecting system as defined in claim **2** wherein said annular cap includes a side wall on the inside circumference substantially normal to said wear resisting sealing face thereof to prevent the resilient annular seal in said counterbore from being forced into the area of said bore while under compression alone and while also subject to shear stresses developed by rotating said rotary plate.

5. A sample injecting system as defined in claim **4** wherein said annular cap includes a side wall on the outside circumference substantially normal to said wear resisting sealing face thereof to constrain the annular seal of resilient material to the space in said counterbore to substantially that covered by said annular cap.

6. A sample injecting system as defined in claim **1** capable of performing sequential analyses on a plurality of samples stored in a plurality of reservoirs, including means for sequentially connecting said reservoirs to said first conduit.

7. A sample injection system for use with a liquid chromatograph system including a plurality of separating columns comprising:

a plurality of sample reservoirs arranged in groups, one group for each column.

a plurality of sample metering and injecting means, one such means for each group of reservoirs drawing a quantity of sample from each reservoir in sequence, said quantity determined by the volume of a metering chamber contained therein,

means for sequentially connecting said metering and injecting means to said reservoirs in said groups alternately between groups for metering samples, and to said columns alternately, whereby while one column is being injected with a sample another sample is being metered for another column.

8. A sample injection system as defined in claim 7 wherein said last named means comprises a rotary plate having a plurality of reservoir storing sectors each consisting of a plurality of bores disposed on concentric circles, one for each group of samples, said bores in a sector being disposed on separate equally spaced radial lines within said sector, a stationary plate having a first plurality of bores so disposed therein as to have one communicate with bores associated with one group of samples and the other communicate with bores associated with another group of samples, and wherein said plurality of sample metering and injecting means are connected to said plurality of bores disposed in said stationary plate, one sample metering and injecting means connected to each bore.

9. A sample injection system as defined in claim 8 wherein said rotary plate has a plurality of ports in pairs and a passage through said rotary plate connecting said ports, two pairs in each sector, one pair for each bore and one port of each pair on the same circle as one of said reservoir storing bores, and said stationary plate has a further plurality of bores, one associated with each of said first plurality of bores so disposed therein that each with its associated one of said first plurality of bores provides simultaneous communication with said pair of ports, and a source of wash under pressure connected to each of said further plurality of bores, and means for selectively connecting said sample metering and injecting means to drain whereby passages involved in sample metering are washed through said stationary and rotary plates and said sample metering and injecting means.

10. A sample injection system as defined in claim 9 wherein said source of wash under pressure comprises a separate reservoir and wash delivery system for each of said further plurality of bores.

11. A sample injection system as defined in claim 8 including a source of wash under pressure, and means for selectively connecting said source of wash solution to said sample metering and injecting means whereby passages involved in sample metering are washed through said stationary and rotary plates, said sample metering and injecting means and said sample reservoirs, and from thence out to a drain.

12. A sample injection system as defined in claim 11 including a second plurality of bores in said stationary plate, one for each of said first plurality of bores so disposed in said stationary plate as to be in communication with one of said sample reservoirs immediately after one of said first plurality of bores is in communication therewith as said rotary table is rotated to bring another of said reservoirs in communication associated with one of said first plurality of bores, and a source of inert gas under pressure connected to each of said second plurality of bores whereby each reservoir is cleansed by said inert gas as it comes into communication with one of said second plurality of bores.

13. A sample injection system as defined in claim 7 wherein each of said plurality of sample metering and injecting means comprises

a high pressure sample injection valve having a stationary plate and a rotary plate, said plates having opposed flat, shear-type valve faces,

said rotary plate having four bores therein disposed an equal distance from its center of rotation, a first pair of bores terminating at ports in the valve face and aligned on a first line passing through said center and on opposite sides thereof, and a second pair of bores terminating at ports in the valve face aligned on a second line passing through said center and on opposite sides thereof, said second line being angularly displaced from said first line,

a passage directly connecting said second pair of bores,

a sample chamber having two ports respectively connected to said first pair of bores in said rotary plate, said sample chamber together with said first pair of bores defining a sample meter chamber,

third and fourth pairs of bores terminating at ports in the valve face of said stationary plate so disposed that for a given position of said rotary plate the ports of said third and fourth pairs of bores are directly opposite the ports of said first and second pairs of bores,

counterbores on the valve face of one of said plates, one counterbore concentric with each port thereof,

shear-type annular seals made of resilient material, one seal seated in each counterbore,

a first conduit connecting a given one of said sample reservoirs to one of said third pair of bores in said stationary plate and a second conduit connecting the other one of said third pair of bores to a drain, and means for providing a pressure differential between said first and second conduits at ports of said third pair of bores whereby sample flows from the reservoir to the drain when valving ports of said first pair of bores are opposite valving ports of said third pair of bores, to fill said metering chamber with sample,

a source of eluent under pressure,

a third conduit connecting one of said fourth pair of bores in said stationary plate to the head of said column and a fourth conduit connecting the other one of said fourth pair of bores to said source of eluent whereby sample is injected into said column for elutriation by said eluent when valving ports of said first pair of bores are opposite valving ports of said fourth pair of bores,

a source of rinsing solution under pressure,

valve means in one of said first and second conduits for interrupting flow of fluid between one of said reservoirs and said drain, and connecting said source of rinsing solution thereto for washing said first conduit and said third pair of bores in said stationary plate when said rotary plate is in a position which places said passage therein between said third pair of bores.

14. A sample injection system as defined in claim 11 wherein each of said plurality of sample metering and injecting means comprises

a high pressure sample injection valve having a stationary plate and a rotary plate, said plates having opposed flat, shear-type valve faces,

said rotary plate having four bores therein disposed an equal distance from its center of rotation, a first pair of bores terminating at ports in the valve face and aligned on a first line passing through said center and on opposite sides thereof, and a second pair of bores terminating at ports in the valve face aligned on a second line passing through said center and on opposite sides thereof, said second line being angularly displaced from said first line,

a passage directly connecting said second pair of bores,

a sample chamber having two ports respectively connected to said first pair of bores in said rotary plate, said sample chamber together with said first pair of bores defining a sample metering chamber,

third and fourth pairs of bores terminating at ports in the valve face of said stationary plate so disposed that for a given position of said rotary plate the ports of said third and fourth pairs of bores are directly opposite the ports of said first and second pairs of bores,

counterbores on the valve face of one of said plates, one counterbore concentric with each port thereof,

shear-type annular seals made of resilient material, one seal seated in each counterbore,

a first conduit connecting a given one of said sample reservoirs to one of said third pair of bores in said stationary plate and a second conduit connecting the other one of said third pair of bores to a drain, and means for providing a pressure differential between said first and second conduits at ports of said third pair of bores whereby sample flows from the reser-

voir to the drain when valving ports of said first pair of bores are opposite valving ports of said third pair of bores, to fill said metering chamber with sample,

a source of eluent under pressure,

a third conduit connecting one of said fourth pair of bores in said stationary plate to the head of said column and a fourth conduit connecting the other one of said fourth pair of bores to said source of eluent whereby sample is injected into said column for elutriation by said eluent when valving ports of said first pair of bores are opposite valving ports of said fourth pair of bores,

a source of rinsing solution under pressure,

valve means in one of said first and second conduits for interrupting flow of fluid between one of said reservoirs and said drain, and connecting said source of rinsing solution thereto for washing said first conduit and said third pair of bores in said stationary plate when said rotary plate is in a position which places said passage therein between said third pair of bores.

15. A sample injection system for use with a chromatographic analyzer or the like for precisely metering a volumetric amount of sample from a reservoir and introducing the metered sample into a separating column through which a fluid stream is flowing comprising:

a plurality of sample reservoirs each containing a quantity of sample;

a movable table for carrying said plurality of sample reservoirs;

a sample metering and injection means connected to said reservoirs for alternately metering a predetermined volumetric amount of sample from one of the sample reservoirs and injecting the metered sample into the path of the fluid stream whereby the fluid stream carries the sample into the separating column; and

means for shifting said movable table to sequentially connect successive ones of said plurality of reservoirs to said sample metering and injection means.

16. A sample injection system as defined in claim **15** comprising in addition:

a source of rinsing solution under pressure; and

means for connecting each sample reservoir to said source of rinsing solution to rinse out said reservoir while said metered sample is being injected into said separating column.

References Cited

UNITED STATES PATENTS

3,223,123	12/1965	Young	137—625.46
3,249,403	5/1966	Bochinski et al.	73—23.1
3,373,872	3/1968	Hrdina	210—198

JAMES DECESARE, Primary Examiner

U.S. Cl. X.R.

55—197