May 26, 1942. R. J. WILSON 2,284,463

ROAD GRADER

Filed Sept. 28, 1939 2 Sheets-Sheet 1

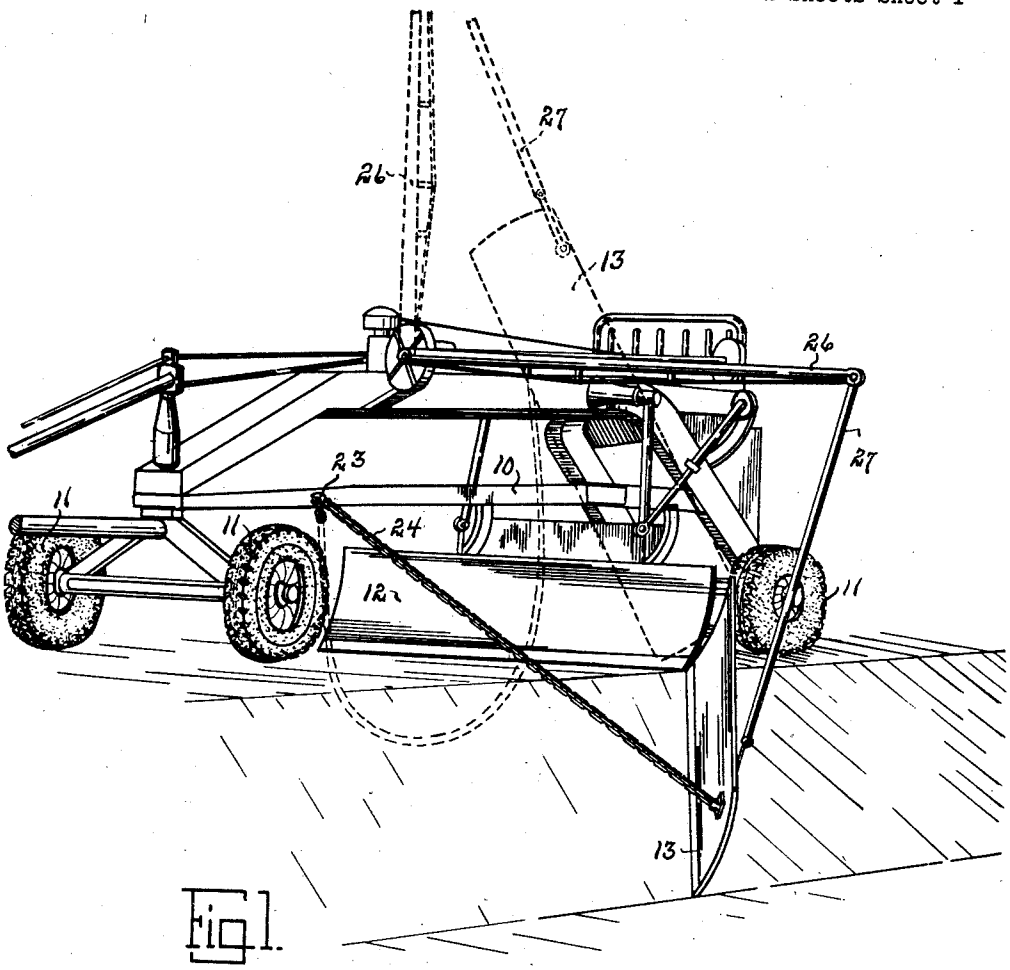

Fig. 1.

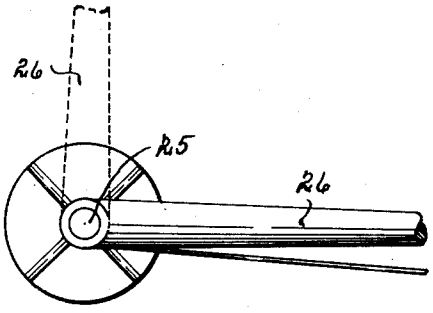

Fig. 2.

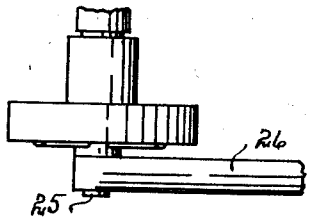

Fig. 3.

INVENTOR.
R. J. WILSON

BY M. Talbert Dick
ATTORNEY.

May 26, 1942. R. J. WILSON 2,284,463

ROAD GRADER

Filed Sept. 28, 1939 2 Sheets-Sheet 2

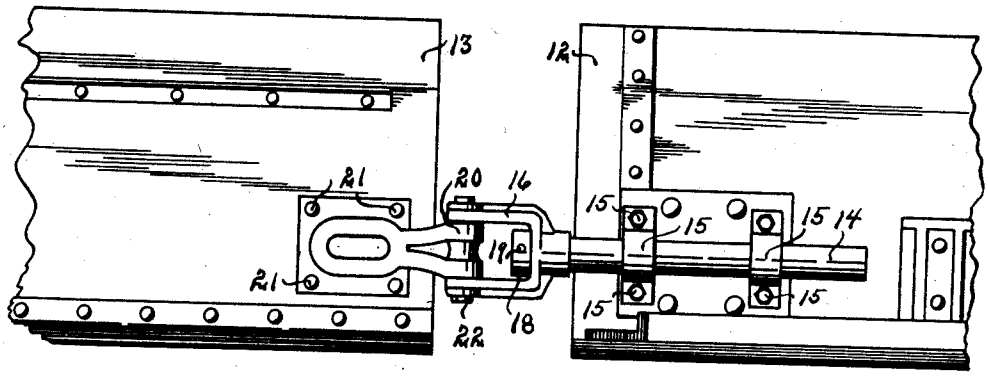

Fig. 4.

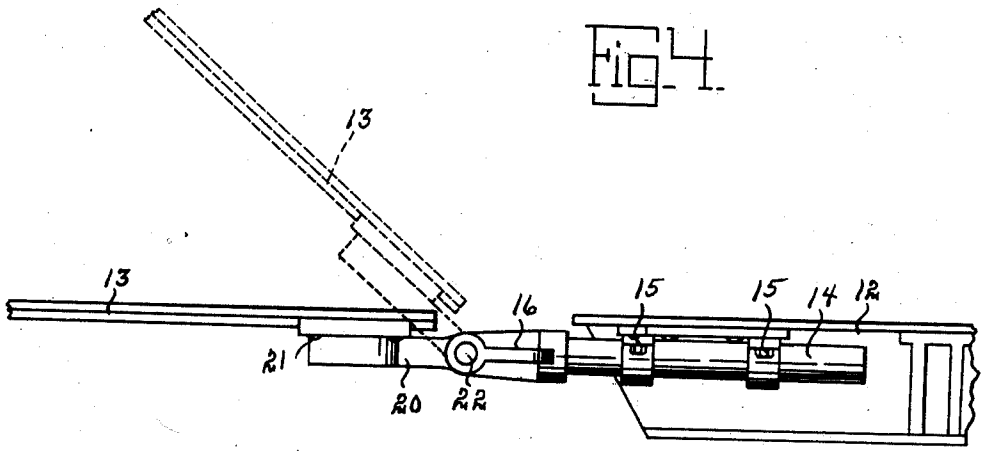

Fig. 5.

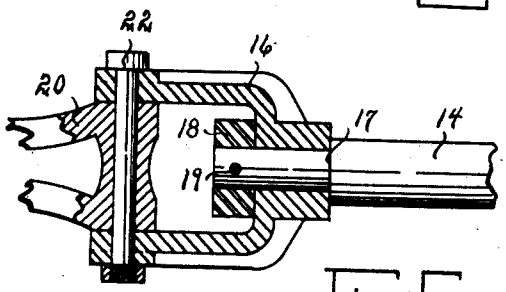

Fig. 6.

INVENTOR.
R. J. WILSON
BY M. Talbert Dick
ATTORNEY.

Patented May 26, 1942 2,284,463

UNITED STATES PATENT OFFICE

2,284,463

ROAD GRADER

Richard J. Wilson, Jewell, Iowa

Application September 28, 1939, Serial No. 296,928

1 Claim. (Cl. 37—155)

The principal object of my invention is to provide a machine for grading roads that not only grades the top main surface of the roadway, but also grades and finishes the downwardly and outwardly side portion or shoulder of the roadway.

More specifically, the object of this invention is to provide a road grading implement that has one grading blade for engaging and finishing the main surface of a roadway and a second blade that extends downwardly and outwardly for grading and finishing the side of a roadway.

A still further object of my invention is to provide a grading implement that is capable of finishing a roadway in two different planes simultaneously.

A still further object of this invention is to provide a desirable road grading machine that is economical in manufacture and durable in use.

These and other objects will be apparent to those skilled in the art.

My invention consists in the construction, arrangement and combination of the various parts of the device, whereby the objects contemplated are attained as hereinafter more fully set forth, pointed out in my claim and illustrated in the accompanying drawings, in which:

Fig. 1 is a perspective view of my road grader in operation.

Fig. 2 is an enlarged front view of a portion of a power-driven control means.

Fig. 3 is an enlarged top plan view of a portion of the control means.

Fig. 4 is a rear view of portions of the two scraper blades of my device and illustrates the manner of securing these two members to each other.

Fig. 5 is a top plan view of the portions of my device shown in Fig. 4.

Fig. 6 is an enlarged view of my means of securing two scraper blades to each other with sections cut away to more fully illustrate this construction.

The use of road graders or scrapers is very old. Such graders, however, have only one or more scraper blades for finishing the top of the roadway and it is, therefore, most difficult to scrape and finish the side approaches to the main traveled surface of the roadway. The scraping and finishing of these side approaches is most necessary in the case of fills.

Obviously, the line at each side of the roadway where the traveled surface of the roadway ceases and the downwardly and outwardly side approaches commence should be straight. This is substantially impossible when one machine is used to grade and scrape the upper surface of the roadway, and another machine is used to finish the side approaches of the runway.

I have overcome such objections by providing a single grader unit that simultaneously finishes the traveled surface of the roadway and the side approach of the runway.

Referring to the drawings, I have used the numeral **10** to designate the frame of an ordinary road grader having the usual wheels **11** and the scraper blade **12** for scraping and finishing the horizontal top portion of a road. Such blades **12** are lowered or raised or positioned by suitable equipment on the road grader. It is to such a common type of road grader that I mount and secure my second scraping blade for finishing the downwardly and outwardly side approaches of the road and which I will now describe.

I have used the numeral **13** to designate my second scraper blade. The numeral **14** designates a shaft rigidly secured to the back outer end of the scraper blade **12** by any suitable means such as bracket and bolt members **15**. By moving these bolts and bracket members, the shaft **14** may be rotated or moved to a suitable position relative to the longitudinal axis of the blade **12**.

In Fig. 4 I show the outer end of this shaft **14** extending beyond the outer plane of the blade **12**. The numeral **16** designates a U-member having its center portion rotatably mounted around the outer end of the shaft **12**. In order to prevent the sliding movement of the member **12**, along the length of the shaft **14**, I have provided the shoulder **17** on the shaft **14** and a head element **18** on the extreme outer end of the shaft **14** and within the U-member **16** as shown in Fig. 6. This head element is held on the shaft **14** by a pin or like **19**. By this arrangement, the U-member **16** may rotate on the shaft **14** but is prevented from longitudinal movement relative to the shaft.

The numeral **20** designates a bearing member rigidly secured to the back inner end of the blade **13** by rivets or like **21**. The numeral **22** designates a bolt extending through the outer two ends of the U-element **16** and rotatably through the bearing member **20**, as shown in Fig. 6. By this construction, the blade **13** is hingedly secured to the U-member **16** and the U-member **16** is in turn rotatably secured on the shaft **14**. The blades **13** and **12** may be moved away from each other or toward each other for adjustment purposes by loosening the brackets and bolts **5**.

The numeral **23** designates a hook on the for-

ward end portion of the frame 10. The numeral 24 designates an elongated flexible member such as a chain, having one end secured to the outer end portion of the blade 13 and its other end portion capable of adjustably engaging the hook member 23 as shown in Fig. 1.

Obviously, the maintained position of the blade 13 to the blade 12 will depend upon the elevation the outer end of the blade 13 is held. Any suitable means may be employed for adjustably supporting and holding the outer end of this blade 13.

Substantially all grading machines have lowering and lifting mechanism which may be power-driven. In the drawings, I show a power shaft 25 which may be rotated in either direction by motor or by hand. The numeral 26 designates an arm having one end rigidly secured to the shaft 25, as shown in Fig. 2 and Fig. 3.

The numeral 27 designates a link having one end hingedly secured to the outer end of the arm 26 and its other end flexibly secured to the outer end portion of the blade 13.

All such power shafts 25 may be held against rotation when desired, and, obviously the position of the shaft 25 will determine the position of the arm 26 and the arm 26 in turn will determine the elevation of the outer end of the blade 13. When the shaft 25 is rotated to the right, the outer end of the blade 13 will be elevated and, when the shaft 25 is rotated to the left, the outer end of the blade 13 will be lowered.

Due, however, to the method of securing the blade 13 to the blade 12 as shown in Fig. 4, the blade 13, when its outer end is lowered below a plane parallel with the blade 12 must move not only outwardly and downwardly, but forwardly, as shown in Fig. 1. In usage, the blade 13 will extend downwardly, outwardly and forwardly to engage the shoulder of the grader and the angle of this shoulder relative to the road surface will depend upon the angle of the blade 13 relative to the substantially horizontal blade 12. The shoulder line will, therefore, be between the inner end of the blade 13 and the outer end of the blade 12 and, when my device is moved in a straight line down the roadway, obviously, the shoulder line will be straight. With the angularity of the blade 13 to the blade 12 remaining constant, the grading of the shoulder will be even and uniform. The grade of the shoulder may be selected and definitely accomplished the entire length of the roadway by lowering or raising the outer end portion of the blade 13 to the desired position. The inner end portion of the blade 13 will be held to move along with the grader proper by its flexible connection with the blade 12 and the outer end of the blade 13 will move with the grader by virtue of the chain 23.

From the foregoing, it will readily be seen that I have provided a highly desirable road grader that not only scrapes and finishes the traveled surface of the roadway but also the side approaches of the roadway.

Some changes may be made in the construction and arrangement of my improved road grader without departing from the real spirit and purpose of my invention, and it is my intention to cover by my claim any modified forms of structure or use of mechanical equivalents which may be reasonably included within its scope.

I claim:

In a device of the class described, a frame, a main scraper blade secured to said frame, a shaft secured to and extending, longitudinally of said scraper blade, a member completely rotatably mounted around the outer end portion of said shaft, an extension blade having its inner end portion hingedly secured to said member to provide its adjustable movement about an axis perpendicular to the axis of said shaft and substantially parallel to its face, and a means for adjustably securing the outer end portion of said extension blade to said frame.

RICHARD J. WILSON.