Sept. 12, 1944. L. BEEH 2,357,870

FUEL INJECTION PUMP FOR INTERNAL-COMBUSTION ENGINES

Filed Nov. 29, 1941 4 Sheets-Sheet 1

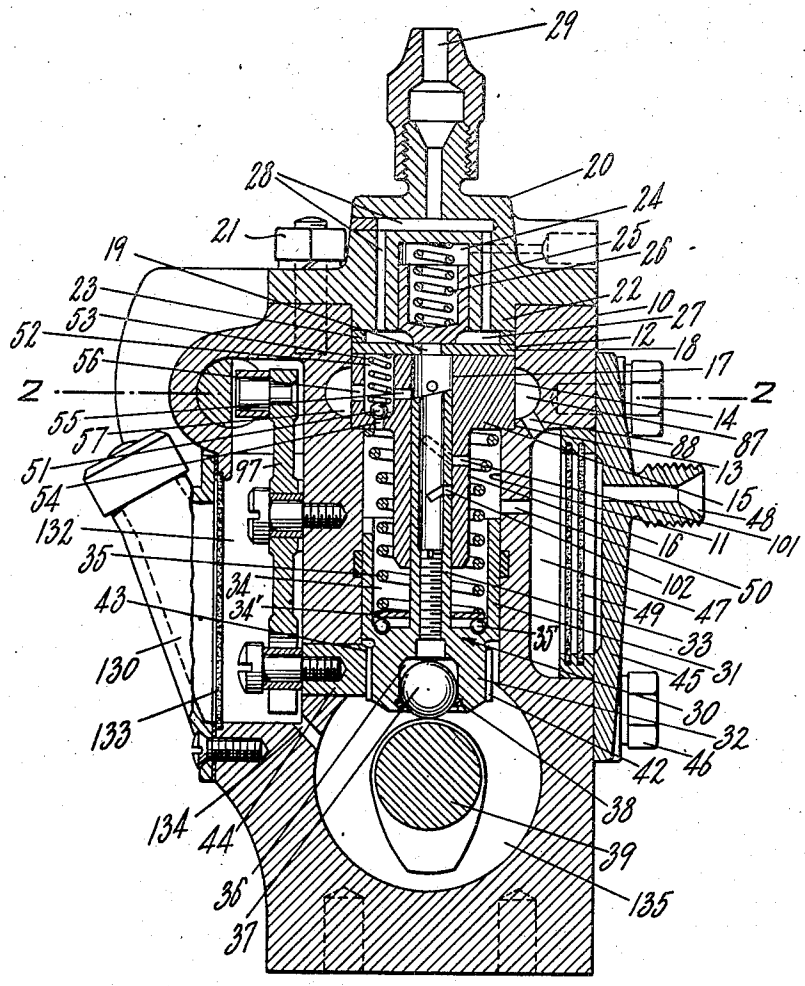

Fig. 1

INVENTOR.
LOUIS BEEH
BY Lawrence W. Lindberg
ATTORNEY

Sept. 12, 1944. L. BEEH 2,357,870

FUEL INJECTION PUMP FOR INTERNAL-COMBUSTION ENGINES

Filed Nov. 29, 1941 4 Sheets-Sheet 2

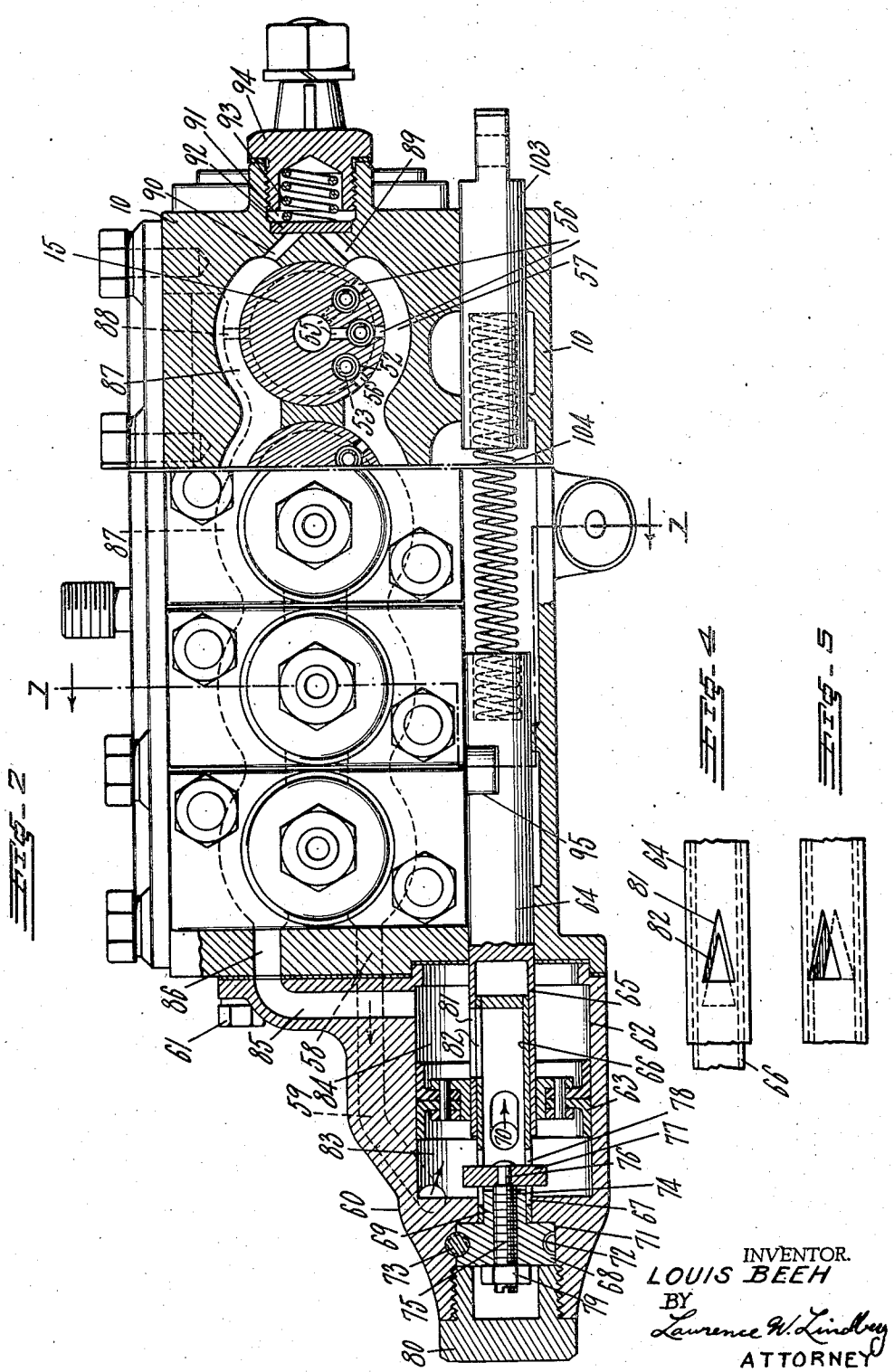

INVENTOR.
LOUIS BEEH
BY
Lawrence W. Lindbey
ATTORNEY

Sept. 12, 1944. L. BEEH 2,357,870

FUEL INJECTION PUMP FOR INTERNAL-COMBUSTION ENGINES

Filed Nov. 29, 1941 4 Sheets-Sheet 3

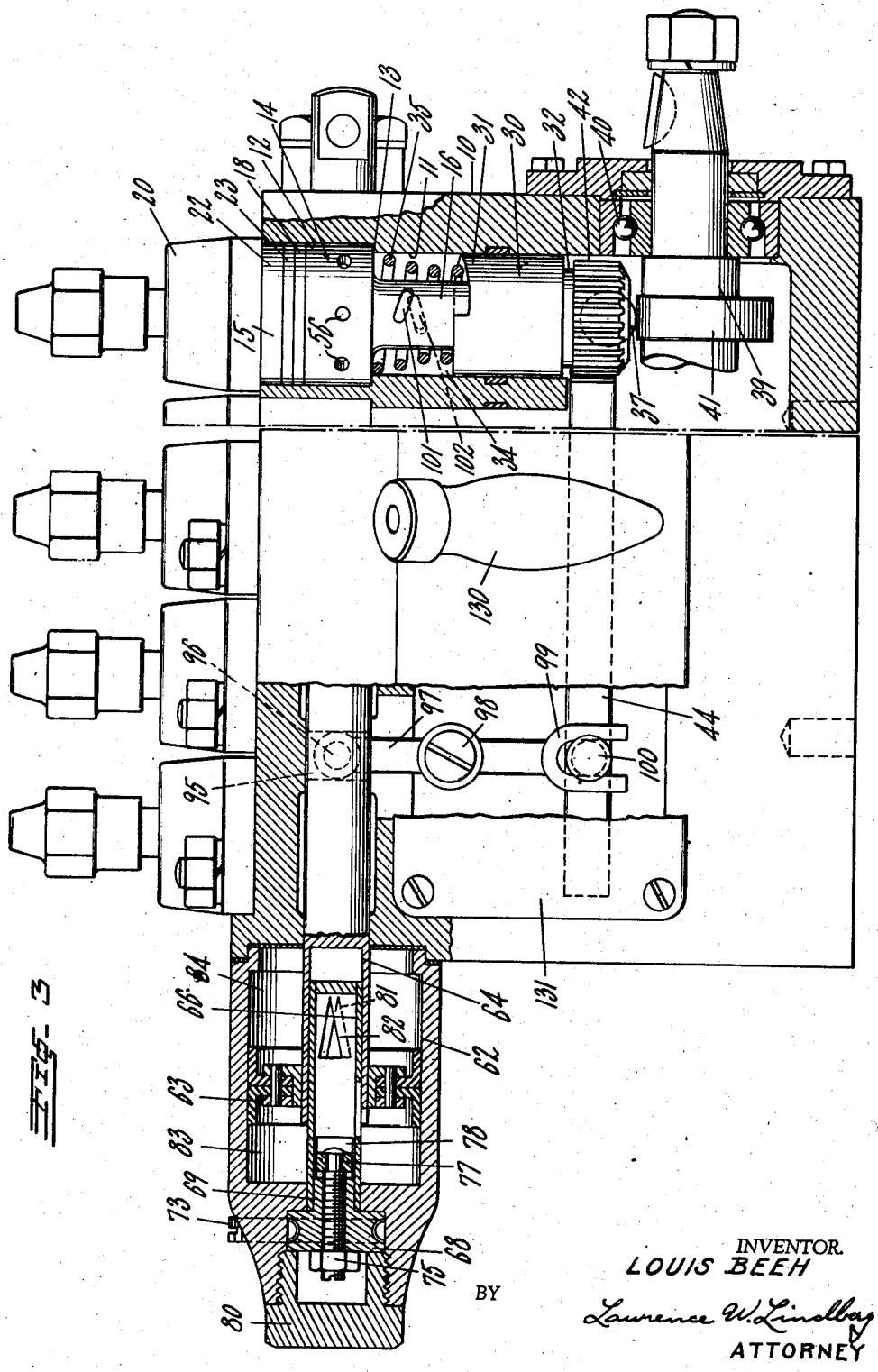

FIG. 3

INVENTOR.
LOUIS BEEH

BY

Lawrence W. Lindbay
ATTORNEY

Sept. 12, 1944. L. BEEH 2,357,870

FUEL INJECTION PUMP FOR INTERNAL-COMBUSTION ENGINES

Filed Nov. 29, 1941 4 Sheets-Sheet 4

Fig. 6

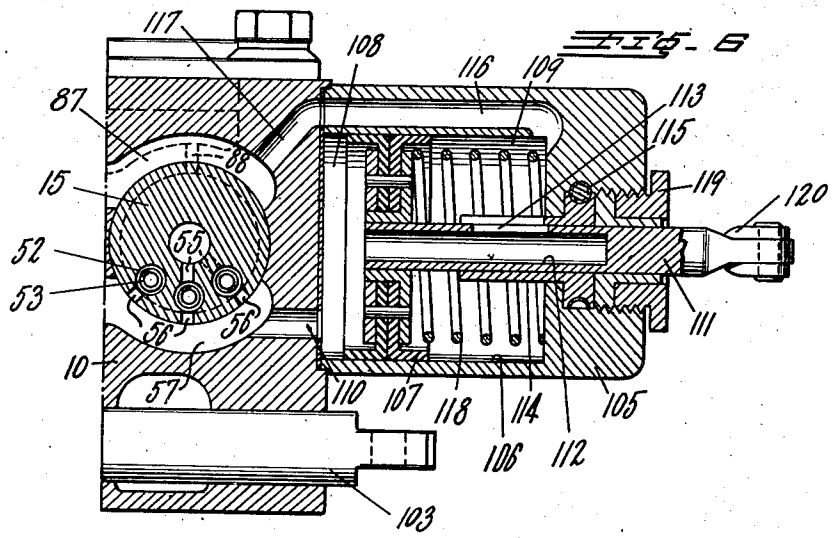

Fig. 7

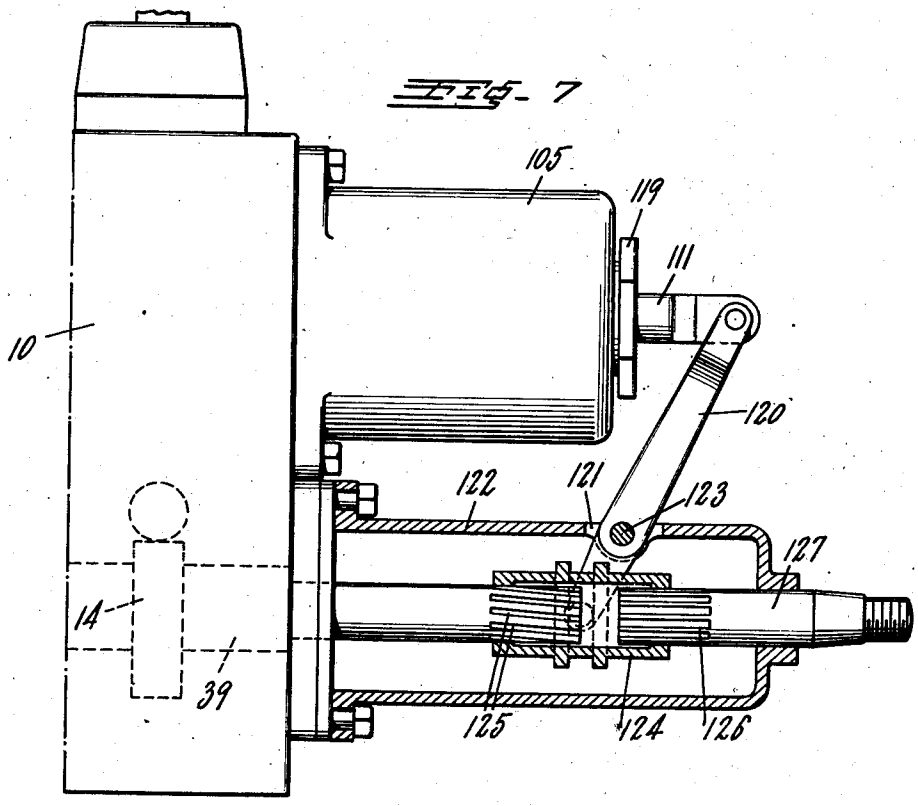

INVENTOR.
LOUIS BEEH

BY Lawrence W. Lindberg
ATTORNEY

Patented Sept. 12, 1944

2,357,870

UNITED STATES PATENT OFFICE

2,357,870

FUEL INJECTION PUMP FOR INTERNAL-COMBUSTION ENGINES

Louis Beeh, Springfield, Mass.

Application November 29, 1941, Serial No. 420,992

17 Claims. (Cl. 103—41)

This invention relates to a fuel pump and more particularly to a fuel pump of the type suitable for solid injection Diesel and other internal combustion engines.

Fuel injection pumps of the type to which the invention relates are frequently used to supply measured charges of fuel under high pressure and it is common practice to supply such injection pumps with fuel under a small initial pressure by means of a separate supply pump. It is among the objects of the present invention to provide a supply pump which is rigidly connected with the injection pump in such a manner that it is simultaneously actuated and controlled by the same mechanism that actuates the injection plungers.

In pumps of the type to which the invention relates it has heretofore been the practice to regulate the quantity of the fuel supplied upon each delivery stroke of the injection plunger by means of a hydraulic system connected to the fuel supply pump and dependent for its control movements upon the pressure in the system between the supply pump and the fuel injection plungers. Such hydraulic control systems as heretofore constructed involve a considerable amount of additional tubing between the supply pump and the injection pump, which tubing not only occupies a considerable amount of additional space but is a cause of failure in the event that any of the tubing should leak or be broken. It is among the objects of the present invention to provide such a control system in which the passages for the control fluid and the mechanism actuated thereby are disposed in the main pump housing or in housings rigidly and directly connected thereto.

It is a further object of the present invention to provide a fuel injection pump in which both the injection plunger and supply plunger are removable as a unit from the pump housing for the purpose of repair or replacement.

It is a further object of the present invention to reduce the friction between the pump plunger and the cam that actuates the same by providing a ball cam follower and providing a simple arrangement for holding and positioning the same.

The quantity of fuel supplied by pumps of the type to which the invention relates, is commonly controlled by means of a spill passage which passage is opened sooner or later in the discharge stroke of the injection plunger to control the quantity of fuel supplied thereby. Inasmuch as this spill passage or by-pass opening is uncovered by the injection plunger as it approaches the end of this discharge stroke, the fuel that flows through this spill orifice is initially at high pressure and is ejected at high velocity. The side walls of the orifice and the cooperating surfaces of the plunger are therefore subject to a considerable amount of wear, which in time tends to reduce the accuracy with which the individual charges supplied by the plunger are measured.

It is among the objects of the present invention to greatly reduce or minimize the wear of the parts mentioned by such an arrangement of the cooperating parts of the injection plunger and cylinder wall that new surfaces are continuously presented to the high pressure fluid to avoid undue wear at any single point.

Further objects and features of the present invention will be apparent to those skilled in the art from a consideration of the following detailed description taken in conjunction with the accompanying drawings in which:

Fig. 1 represents a vertical section, with parts shown in side elevation, through one of the cylinders of a multiple cylinder injection pump constructed in accordance with the present invention.

Fig. 2 represents a horizontal section taken upon the line 2—2 of Fig. 1, parts being broken away and other parts removed for the sake of clearness.

Fig. 3 represents a side elevation of the pump with parts broken away and other parts removed for the purpose showing internal structure.

Figs. 4 and 5 represent a detail of a control valve in the hydraulic control system, showing the position of the same when displaced longitudinally and angularly, respectively.

Fig. 6 represents a horizontal section of a portion of the pump, corresponding to the right hand side of Fig. 2, but to which a hydraulic timing control mechanism has been added.

Fig. 7 represents a side view of the timing control mechanism with parts shown in section.

Referring to the drawings reference numeral 10 indicates a pump housing which is provided with a plurality of cylinder bores 11, one for each of the required cylinders of the multi-cylinder pump.

The drawings disclose a pump which was designed with a large number of cylinders some of which have been omitted and the drawings contracted as indicated by the broken lines in Figures 2 and 3. Since the individual cylinders are identical a description of one of them will suffice to enable those skilled in the art to supply any desired number. This description will now be given with particular reference to Figure 1. The cyl-

inder bore 11 is provided with an enlarged portion 12 at the upper end of the pump body 10 to provide a shouldered portion 13, upon which rests a cylinder sleeve 14. The cylinder sleeve 14 is formed of a heavy cylindrical block portion 15 from which a portion 16 of greatly reduced diameter projects downwardly into the bore 11.

The sleeve 14 is provided with a central bore 17 extending therethrough and of considerably less diameter than the bore 11. The upper end of the bore 17 is closed by a disc 18 having a central orifice 19. A cylinder head 20, which is detachably mounted upon the pump housing 10 by nuts 21, is provided with a cylindrical portion 22 adapted to enter the enlarged portion of the bore 11 and by bearing against a seal ring 23 hold the disc 18 securely against the upper surface of the cylindrical block 15 and thus maintain this member securely in position against the shouldered portion 13 of the bore 11.

Within the cylinder head 20 is a cavity 24 adapted to accommodate a discharge valve 25 which is normally held in closing relation to the orifice 19 by a spring 26. The novel features of the discharge valve 25 are described and claimed in my co-pending application Serial No. 409,663 filed September 6, 1941.

An annular chamber 27 is formed around the valve 25 between the cylinder head 20 and the disc 18. Passages 28 in the head 20 provide communication between the annular chamber 27 and the discharge conduit 29, which conduit leads to one of the atomizing nozzles of a multi-cylinder internal combustion engine or other point of use in accordance with prior practise.

Within the lower portion of the cylinder bore 11 a double plunger 30 is mounted for both longitudinal and angular movements which movements are imparted thereto in a manner hereinafter described. The double plunger 30 comprises an outer cylindrical sleeve 31 of such external diameter as to make a fluid-tight sliding fit with the lower portion of the cylindrical bore 11. The sleeve 31 projects from a base portion 32 of slightly less external diameter than the internal diameter of the bore 11 and a second sleeve 33 projects upwardly from the base portion 32 into the bore 17 of the cylinder sleeve 14 with which it makes a fluid-tight sliding fit. The construction provides an annular space 34 in part between the cylinder bore 11 and the external wall of the sleeve 16 and in part between the internal wall of the sleeve 31 and the external wall of the sleeve 33. The annular space 34 is utilized as a supply pump chamber in a manner which will hereinafter be apparent. Within the annular space 34 is a compression spring 35 which bears at its upper end against the block 15 and at its lower end against the base portion 32 of the double plunger 30 to bias the plunger in the direction of its lowermost or outermost position. A plate 34' resting on ball bearings 35' is preferably interposed between the spring 35 and the base portion 32 to reduce the friction therebetween and prevent twisting distortions of the spring upon angular movements of the double plunger 30.

The base portion 32 is provided with a cavity 36 on the lower side thereof and coaxial therewith which cavity accommodates a ball cam follower 37, preferably retained in the cavity by means of a spring ring 38. A cam shaft 39 is journalled in the lower portion of the pump housing 10 by means of ball bearings 40 and carries a cam 41 positioned to contact the ball cam follower 37. The ball rides on the cam and thus reduces the friction between the cam and base portion 32 of the double plunger. The cam 41 is thus effective to move the double plunger 30 upwardly, thereby effecting a pumping stroke for both the supply pump and the injection pump. The base portion 32 of the double plunger 30 is provided on its external surface with gear teeth 42 which mesh with coacting teeth 43 of a rack 44 to the end that longitudinal movements of the rack 44, which movements are imparted thereto in a manner hereinafter to be described, effect angular movements of the double plunger 30.

The pump housing 10 is provided with a side plate 45, detachably secured thereto by means of screw bolts 46, which side plate closes a cavity 47. The cavity 47 extends substantially the full length of the housing 10 and provides a fuel sump common to all of the cylinders. Fuel is supplied to the sump from a suitable source by way of a nipple connection 48 formed on the side plate 45. A filter 49 is provided adjacent the fuel inlet and the bore 11 is provided with a passage 50 which passage provides communication between the fuel sump 47 and the interior of the pump chamber 34. As shown, the passage 50 opens into the pump chamber 34 at a point in the side wall thereof which is immediately above the upper edge of the sleeve 31 when the latter is in its lowermost position as shown in Fig. 1.

The upper edge of the sleeve 31 which controls the passage 50 is cut on an angular bias with respect to the horizontal so that angular movement of the plunger will result in a variation in the extent of the upward stroke of the plunger before the passage 50 is closed by the upper lip of the sleeve 33. A check valve 51, positioned in a cavity 52 of the cylindrical block portion 15, is normally held by a spring 53 in closing position with respect to a passage 54, which passage forms the discharge or outlet from the pump chamber 34. As shown, the cavity 52 is formed as a countersunk bore extending downwardly from the upper surface of the cylindrical block 15 and accordingly is closed at its upper end by the disc 18 which forms the fixed bearing for the spring 53. A passage 55 connects the cavity 52 with the interior of the bore 17 at a point immediately above the upper edge of the sleeve 33 when the latter is in its lowermost position as shown in Fig. 1. A second passage 56 connects the cavity 52 with a channel 57 formed in the interior of the housing 10, which channel forms a pressure supply reservoir common to all of the pump cylinders. While one discharge valve 51, in a single cavity 52 together with the associated passages, is sufficient for one cylinder unit I prefer to provide a plurality of these for each cylinder unit, as may be seen more clearly from Figure 2, which shows three such valves are provided in the block 15 on the side thereof adjacent channel 57. These are identical in form except that the passages 55 between the cavities 52 and the bore 17 are arranged to open into the bore 17 at slightly different levels. Thus the central one of these cavities has an opening into the bore 17 at the level of the section line 2—2. The discharge cavity to the left of this central one has a passage opening into the bore 17 at a point above the level of this section line, while that to the right has a passage slightly below the section line. The upper lip of the sleeve 33 is cut at a slight angle coinciding with the inclination

of a line defined by the openings of passages 55 into the bore.

The channel 57 is connected at one end of the housing 10 with a passage 58 which extends through the end wall of the housing and provides communication with a passage 59 formed in a member 60 which as shown is rigidly attached to the end wall of the pump housing by means of screw bolts 61 but which if desired may be cast integrally with the housing. The passage 59 opens into a cylindrical chamber 62 formed in the member 60 which chamber contains a piston 63. The piston 63 is rigidly connected to one end of a rod 64, which end of said rod is provided with a cylindrical bore 65 extending lengthwise thereof and partially therethrough.

A sleeve 66 extends into the bore 65, making a sliding fit therewith. The outer end of the sleeve 66 extends into a bore 67 in the outer end of the member 60 and is adjustably positioned by means of a block 68, which block is provided with a central annular boss 69 projecting into and rigidly connected with the outer end of the sleeve 66 so that the latter is angularly adjustable by angular rotation of the block. The block 68 is dimensioned to fit in an enlarged portion 71 of the bore 67, and the outer circumference of this enlarged portion is provided with a groove 72 having threads coacting with corresponding threads of an adjusting screw 73 which extends through the side wall of the member 60.

The block 68 is provided with a central longitudinal bore 74 which is internally threaded to coact with external threads on a rod 75. The rod 75 extends through and slightly beyond the ends of the adjusting block 68 and carries, upon a reduced portion 76, a cross bar 77, which cross bar extends through longitudinal slots 78 in the sleeve 66. The opposite end of the rod 75 projects slightly beyond the outer end of block 68, and is provided with a lock nut 79 which secures the rod 75 in any position relative to the block 68 to which the rod may be adjusted. Thus by turning the rod 75, while the block 68 is held stationary the cross bar 77, which does not rotate with the rod, is moved toward or away from the piston 63 and thereby determines the outermost limit of movement of the piston. The slots 78 are not sufficiently large to permit free flow of fuel between the pressure chamber 83 and the interior of the sleeve 66, and for this reason an additional opening 70 is provided in the sleeve 66 adjacent the pressure side of the piston 63. An end plug 80 closes the outer end of the bore 74 and aids in retaining the parts in their adjusted position.

A triangular slot 81 in the rod 64 provides an opening between the cylinder chamber 62 and the bore 65. A corresponding slot 82 in the sleeve 66 normally registers with the slot 81, and these two slots together with the interior of the sleeve 66 and the opening 70 provide communication between the intake pressure chamber 83 on the outer side of the piston 63 and the discharge chamber 84 on the opposite side of the piston. The extent of this communication is varied by angular movements of the sleeve 66 imparted thereto through block 68, to which the sleeve is rigidly attached to the end that the communication between the two sides of the piston 63 may be restricted to any desired degree. Longitudinal movement of the rod 64 also alters the effective area of the opening.

A passage 85 provided in the member 60 connects the discharge chamber 84 by way of passage 86 in the end wall of the housing 10, with a channel 87 formed in the interior wall of said housing in the same manner as the channel 57 is formed on the opposite interior wall. One or more passages 88 connect channel 87 with the fuel sump 47.

At the end of the housing 10 remote from the hydraulic fuel control device, passages 89 and 90 connect the channels 57 and 87 with a chamber 91 provided in the end wall of the housing. A valve 92 in the chamber 91 normally closes both of the passages 89 and 90, being biased in the closing direction by a spring 93. A screw plug 94 closes the outer end of the chamber 91, and provides a means for adjusting the tension of the spring 93.

The rod 64 of the hydraulic control device extends into the housing 10 and has a cutout portion 95 to accommodate an actuating pin 96 which protrudes from one end of a lever 97. The lever 97 is fulcrumed at a point intermediate its ends on a pivot pin 98, which protrudes from the outer face of an interior wall of the pump housing, and terminates in a forked end 99. A pin 100 which protrudes from the rack 44 is embraced by the forked end of the lever to impart movements of the lever to the rack. Accordingly reciprocative movements of the piston 63 and the attached rod 64 are transmitted by the lever 97 to the rack 44, which rack imparts angular movements to the double plungers of each cylinder unit and thereby alters the effective capacity of the injection plunger 33 of all units, since each of these plungers is provided with an inclined slot 101 forming a spill passage through the wall of the cylinder sleeve 16, and an oppositely inclined slot 102 through the wall of the hollow plunger is adapted to come into partial registration with the slot 101 toward the end of the discharge stroke of the plunger.

A rod 103 coaxial with the rod 64, is reciprocatively mounted in the housing 10 and projects for a short distance therefrom for attachment to any suitable manual control means. A spring 104 is positioned between the enclosed ends of the rods 64 and 103, being seated in sockets provided in these ends, whereby manual adjustments of the rod 103 varies the required force required upon the face of the piston 63 to effect a given movement of the rod 64 against the tension of the spring 104.

Where it is desired to control the timing of the pump in accordance with the engine speed and load as well as to control the quantity of fuel supplied, the additional elements required can readily be applied to the mechanisms so far described by means of the additions shown in Figures 6 and 7. Referring to these figures a housing 105 is attached to the end wall of the pump remote from the hydraulic control mechanism previously described. This housing 105 is provided with a cylinder bore 106 having a piston 107 which divides the cylinder bore 106 into a pressure chamber 108 and a discharge chamber 109. An inlet passage 110 is provided in the end wall of the housing 10 between the channel 57, which is the high pressure supply channel, and the pressure chamber 108. A piston rod 111 is rigidly connected with the piston 107 and is provided with a bore 112 extending partially therethrough from the piston end thereof. A slot 113 is provided in the side wall of the

bore 112 in a position to be adjustably covered by a control sleeve 114 which control sleeve is provided with a similar slot adapted to register with the slot 113 in the same manner as has previously been disclosed in connection with the slots 81 and 82 of the timing control mechanisms. The control sleeve 114 is angularly adjustable by means of an adjusting screw 115 to the end that communication between the pressure chamber 108 and the discharge chamber 109 may be relatively free or relatively obstructed by angular adjustment of the control sleeve 114. Movement of the piston 107 to the right from the position shown in Figure 6 also tends to restrict communication between the pressure and discharge sides of the piston, the slots being triangular in shape as is disclosed in connection with the analogous slots of the timing device, and shown in Figures 4 and 5. A discharge passage 116 in the housing 105 connects the discharge chamber 109 with a passage 117 formed in the end wall of the pump housing and this passage 117 opens into the channel 87 which channel as previously described permits the return flow of the fuel to the supply sump 47 by way of passage 88. The piston 107 is biased in the direction of the pressure chamber 108 by means of a spring 118. The piston rod 111 projects outwardly of the housing 105 through a packing gland 119 and is connected at its outer end with a lever 120. The opposite end of this lever extends through an opening 121 in a housing 122 which housing is mounted upon the end wall of the pump surrounding the projecting end of the cam-shaft 39. The lever 120 is pivoted intermediate its ends upon a pivot pin 123 positioned in the opening 121. The free end of lever 120 actuates a collar 124 which collar is provided with internal splines that coact with splines 125 formed on the end of the cam shaft. Similar internal splines at the opposite end of the collar coact with splines 126 formed on the surface of a driving or stub shaft 127. The splines 126 and 127 are so inclined relative to each other that longitudinal movement of the collar 124 shifts slightly the angular position of the cam 39 relative to the driving shaft 127.

Lubricant may be supplied to the pump by way of an oil spout 130 formed on a face plate 131, which face plate closes an oil cavity 132 formed in the housing 10 on the opposite side thereof from the cavity 47. A filter 133 is positioned between the face plate 131 and the cavity 133 to the end that all of the lubricant passing through the oil spout to the cavity must pass through the filter. Since the cavity 133 contains the major parts of the fuel control mechanism these parts will be at least partially immersed in lubricant. Passages 134 connect the lower portion of the cavity 132 with the cam chamber 135.

In the operation of the device as above described, fuel is drawn into the annular space 34 from the sump 47 after the sleeve 31 has uncovered the passage 50 during the latter part of the downward stroke of the double plunger 30. Upon the upward stroke of the double plunger the sleeve 31 covers the passage 50 sooner or later in the course of its upward movement. When the plunger is so adjusted that the upper inclined lip of the sleeve 31 immediately obstructs this passage then the maximum fuel quantity of which the supply pump is capable is forced upon the upward movement of the plunger past the discharge valve 51. When the plunger has been so rotated that the lowermost portion of the lip of the sleeve 31 is adjacent the passage 50 then the plunger must move upward for a short distance before the passage 50 is obstructed and the effective capacity of the supply pump, that is the quantity of fuel that is forced into the cavity 52, is at a minimum. From the cavity 52, of which as previously mentioned there are preferably a plurality, the fuel passes into the channel 57 which forms a pressure supply reservoir common to all of the cylinder units from which it may flow into the chamber of the high pressure pump after the high pressure plunger 33 has uncovered the passages 55 when the plunger has been returned to its lowermost or normal position. It will be noted that passages 55 are not arranged in the same horizontal planes but are disposed at a slight angle which corresponds to the inclination of the upper lip of the sleeve 33 which forms the high pressure injection plunger. Thus rotation of the double plunger also rotates the inclined upper lip of the hollow injection plunger to the end that the passages 55 are slightly more obstructed when the engine is rotating at high speed so that slightly less fuel will be admitted to the high pressure pump chamber under these conditions than would be admitted at low speed. Upon the upward movement of the plunger fuel is forced past the discharge valve 25 and into the discharge conduit 29 whence it passes to the usual injection nozzles (not shown). The uppermost portion of the inclined slot of the sleeve 33 passes the lowermost portion of the upwardly inclined slot 101 in the wall of the sleeve 16 and thus the remainder of the fuel is forced out through these slots back into the chamber 34 of the supply pump. It will be seen that upon rotation of the sleeve 33 the uppermost portion of the slot in the wall of the high pressure plunger may be rotated to a point where it is not in alignment with the lowermost point of the oppositely inclined slot in the sleeve 16 thus under these conditions the plunger 33 must move farther in its upward stroke before the registration of any part of the two inclined slots is effected and thus the quantity of fuel that is forced past the discharge valve 25 will be increased before the passages which constitute the spill passage or by-passage is opened.

The capacity of the supply pump even when adjusted to its minimum capacity position is far greater than the capacity of the high pressure or injection pump so that from the plurality of plungers constituting a multi-cylinder pump a considerable excess quantity of fuel is forced into the channel 57, which constitutes the supply reservoir, over and above that required for the injection pumps. This excess fuel flows by way of passages 58 and 59 into the chamber 62 where acting upon the outer face of the piston 63 it tends to force the rod 64 to the right against the action of spring 104. Movements of the rod 64 are transmitted by the lever 97 to the rack bar 44 which acts to rotate all of the double plungers to vary both the quantity of fuel available in the pressure reservoir 57 and the quantity of fuel supplied per pumping stroke by each of the injection plungers. The fuel from the pressure chamber 83 passes to the discharge chamber 84 through the throttle opening formed by the two triangular slots 81 and 82, flowing either freely or with more or less restriction according to the adjustment of the sleeve 66 as determined by the setting of adjusting screw 73. Thus the

pressure on the discharge side of the plunger 63 may be closely approximate to the pressure on the intake side thereof or there may be a considerable difference between these pressures depending upon whether the two slots are in complete or only partial registration. From the discharge chamber 84 the fuel passes by way of the return passage 85 and 86 to the channel 87 from which it flows back to the fuel sump 47 by way of passages 88.

In the event of too great an obstruction to the passage of fuel being interposed between the high pressure reservoir 57 and the low pressure or discharge reservoir 87, the pressure in the chamber 57 acting upon the disc valve 92 will open the valve to permit the flow of fuel from the pressure reservoir 57 to the discharge reservoir 87 by way of passages 89 and 90.

The effective pressure required on the face of the piston 63 to effect a given movement of the rack 44 and accordingly a given adjustment of the capacity of the pumps may be altered by any manual means such as an accelerator pedal or throttle lever connected with the rod 103.

Where it is desired to alter the timing of the pump that is to say the time of the injection strokes of the plungers relative to the stroke of the engine pistons the disc valve 92 may be omitted and the pressure chamber 57 and the discharge chamber 87 are then in communication through the hydraulic timing control mechanism shown in Figures 6 and 7. In this case the fuel passes from the pressure channel 57 to the pressure chamber 108 by way of the inlet passage 110 where it acts upon the face of piston 107 to move the same against the action of spring 108 until the forces are balanced. The piston rod 111 is thereby moved to the right shifting the timing collar 124 to the left of the position shown in Fig. 7 and accordingly advancing the angular position of the cam shaft 39 relative to the driving or stub shaft 127. Thus the timing is dependent upon the pressure of the fuel in the channel 57. The pressure of the fuel in the pressure reservoir 57 is dependent in general, upon the speed of the engine by which the pump is driven, but is modified by the manual adjustment of the throttling orifice between the pressure and discharge sides of piston 107.

From the above description it will be apparent that this invention provides a device in which the various elements such as the supply pump for placing the fuel under an initial pressure, the injection pump for raising accurately measured quantities of the supplied fuel to the required injection pressure, together with the means for controlling the quantity of fuel supplied in accordance with the demand on the engine, and also where desired, the means for varying the timing of the pump in accordance with the speed of the engine, are all incorporated in a unitary structure. Furthermore by providing that each cylinder unit of a multi-cylinder pump shall include both a supply plunger and an injection plunger I have combined both functions in a single cylinder unit without increasing the number of parts since the sleeve which constitutes the plunger of the supply pump also acts as the usual guide member for the injection plunger. It will also be noted that by the provision of the chamber of the supply pump enclosing the end of the sleeve forming the cylinder of the injection pump leakage around the injection plunger is minimized by the increase in pressure in the supply pump chamber simultaneously with the increase in pressure in the injection pump, and any leakage that may occur is directly into the supply pump and not into the lubricating oil around the actuating and control mechanism.

It will likewise be apparent that the present invention avoids many other difficulties inherent in fuel injection pumps as at present constructed. It is current practise to use a supply pump having but one or two pump cylinders of relatively large capacity to supply an injection pump having six or more cylinders. This necessarily results in a material difference in the pressure of the fuel in the pressure supply reservoir as between the pressure stroke of the supply plunger and the suction stroke thereof. By providing a structure in which there are as many supply plungers as injection plungers such variations in pressure in the supply reservoir are avoided since the pressure stroke of one of the supply pumps always coincides with the suction stroke of one of the injection plungers. There is therefore no difference between the quantity of fuel passing to one of the injection cylinders and that passing to another during any given operating condition of the engine. That is to say that all of the injection cylinders will be supplied at the same pressure during any given operating condition. Thus there can be no difference between the quantity of fuel supplied to one of engine cylinders and that to another on this account, and the smoothness of engine operation is accordingly improved. The absence of pressure pulsations in the fuel supply reservoir is of course all the more desirable where the fuel supply pressure is utilized to control the quantity of fuel supplied to the engine or the timing thereof.

While there has been herein described but a single embodiment of the invention other embodiments and modifications incorporating the advantageous features and novel functions of the form herein disclosed, and embraced by the following claims will be apparent to those skilled in the art.

Having thus described the invention, I claim:

1. A combined supply and injection pump for internal combustion engines comprising a pump housing, a plurality of cylinder units mounted in said housing, each unit constituting a supply pump and an injection pump and including a double plunger, said double plunger comprising a pair of concentric plungers of different diameter, the smaller constituting an injection plunger and the larger a supply plunger, a cylinder forming a pump chamber for said supply plunger, a cylinder sleeve having a bore forming a pump chamber for said injection plunger, said sleeve having one end terminating in said supply pump chamber, a pressure supply chamber formed in said pump housing and common to all of said units for receiving fuel discharged from said supply pump chambers, and conveying the same to said injection pump chambers.

2. A combined supply and injection pump for internal combustion engines comprising a pump housing, a plurality of cylinder units mounted in said housing, each unit constituting a supply pump and an injection pump and including a double plunger, said double plunger comprising a pair of concentric plungers of different diameter, the smaller constituting an injection plunger and the larger a supply plunger, a cylinder forming a pump chamber for said supply plunger, a cylinder

sleeve having a bore forming a pump chamber for said injection plunger, said sleeve having one end terminating in said supply pump chamber, a pressure supply chamber formed in said pump housing and common to all of said units for receiving fuel discharged from said supply pump chambers, and conveying the same to said injection pump chambers, and a single means for simultaneously altering the effective capacity of both said supply pump and said injection pump.

3. A combined supply and injection pump for internal combustion engines comprising a pump housing, a plurality of cylinder units mounted in said housing, each unit constituting a supply pump and an injection pump and including a double plunger, said double plunger comprising a pair of concentric plungers of different diameter, the smaller constituting an injection plunger and the larger a supply plunger, a cylinder forming a pump chamber for said supply plunger, a cylinder sleeve having a bore forming a pump chamber for said injection plunger, said sleeve having one end terminating in said supply pump chamber, a pressure supply chamber formed in said pump housing and common to all of said units for receiving fuel discharged from said supply pump chambers, and conveying the same to said injection pump chamber, and means actuated by the pressure in said pressure chamber for controlling the quantity of fuel delivered by said injection plunger.

4. A combined supply and injection pump for internal combustion engines comprising a pump housing, a plurality of cylinder units mounted in said housing, each unit constituting a supply pump and an injection pump and including a double plunger, said double plunger comprising a pair of concentric plungers of different diameter, the smaller constituting an injection plunger and the larger a supply plunger, a cylinder forming a pump chamber for said supply plunger, a cylinder sleeve having a bore forming a pump chamber for said injection plunger, said sleeve having one end terminating in said supply pump chamber, a pressure supply chamber formed in said pump housing and common to all of said units for receiving fuel discharged from said supply pump chambers, and conveying the same to said injection pump chambers, and means actuated by the pressure in said pressure chamber for controlling the quantity of fuel supplied by said supply pump to said pressure chamber.

5. A combined supply and injection pump for internal combustion engines comprising a pump housing, a plurality of cylinder units mounted in said housing, each unit constituting a supply pump and an injection pump and including a double plunger, said double plunger comprising a pair of concentric plungers of different diameter, the smaller constituting an injection plunger and the larger a supply plunger, a cylinder forming a pump chamber for said supply plunger, a cylinder sleeve having a bore forming a pump chamber for said injection plunger, said sleeve having one end terminating in said supply pump chamber, a pressure supply chamber formed in said pump housing and common to all of said units for receiving fuel discharged from said supply pump chambers, and conveying the same to said injection pump chambers, and means actuated by the pressure in said pressure chamber for controlling the quantity of fuel supplied by said supply pump to said pressure chamber and the quantity of fuel supplied by said injection pump to the engine.

6. A combined supply and injection pump for internal combustion engines comprising a pump housing, a plurality of cylinder units mounted in said housing, each unit constituting a supply pump and an injection pump and including a double plunger, said double plunger comprising a pair of concentric plungers of different diameter, the smaller constituting an injection plunger and the larger a supply plunger, a cylinder forming a pump chamber for said supply plunger, a cylinder sleeve having a bore forming a pump chamber for said injection plunger, said sleeve having one end terminating in said supply pump chamber, a pressure supply chamber formed in said pump housing and common to all of said units for receiving fuel discharged from said supply pump chambers, and conveying the same to said injection pump chambers, a hydraulic control device rigidly connected with said housing and actuated by the pressure in said pressure supply chamber.

7. A combined supply and injection pump for internal combustion engines comprising a pump housing, a plurality of cylinder units mounted in said housing, each unit constituting a supply pump and an injection pump and including a double plunger, said double plunger comprising a pair of concentric plungers of different diameter, the smaller constituting an injection plunger and the larger a supply plunger, a cylinder forming a pump chamber for said supply plunger, a cylinder sleeve having a bore forming a pump chamber for said injection plunger, said sleeve having one end terminating in said supply pump chamber, a pressure supply chamber formed in said pump housing and common to all of said units for receiving fuel discharged from said supply pump chambers, and conveying the same to said injection pump chambers, a hydraulic timing control device and a hydraulic fuel supply control device both rigidly connected with said housing on opposite ends thereof and actuated by the pressure in said pressure supply chamber.

8. A pump including a cylinder, a plunger reciprocative therein, means to supply fuel to the interior of said cylinder, connecting means whereby a portion of the fuel supplied to said chamber is forced by said plunger to the point of use, and means to return a controlled portion of the fuel in said cylinder to the intake side of the pump said means including a slot in the side wall of the cylinder forming an elongated opening therethrough, and a corresponding slot in said plunger said slots being inclined relative to each other whereby the portion of the two slots in registry continuously changes during the discharge stroke of the plunger.

9. A pump including a cylinder, a plunger reciprocative therein, means to supply fuel to the interior of said cylinder, connecting means whereby a portion of the fuel supplied to said chamber is forced by said plunger to the point of use, and means to return a controlled portion of the fuel in said cylinder to the intake side of the pump said means including a slot in the side wall of the cylinder forming an elongated opening therethrough, and a corresponding slot in said plunger said slots being inclined relative to each other whereby the portion of the two slots in registry continuously changes during the discharge stroke of the plunger and means for rotating said plunger to vary the point in said discharge stroke at which said slots first come into partial registration.

10. A combined supply and injection pump for internal combustion engines comprising a pump

housing, a plurality of cylinder units mounted in said housing, each unit constituting a supply pump and an injection pump and including a double plunger, said double plunger comprising a pair of concentric plungers of different diameter, the smaller constituting an injection plunger and the larger a supply plunger, a cylinder forming a pump chamber for said supply plunger, a cylinder sleeve having a bore forming a pump chamber for said injection plunger, said sleeve having one end terminating in said supply pump chamber, a pressure supply chamber formed in said pump housing and common to all of said units for receiving fuel discharged from said supply pump chambers, and conveying the same to said injection pump chamber said sleeve having a spill passage extending therethrough and controlled by said injection plunger, whereby the excess fuel from the chamber of said injection pump is discharged directly into the chamber of said supply pump.

11. A combined supply and injection pump for internal combustion engines comprising a pump housing, a plurality of cylinder units mounted in said housing, each unit constituting a supply pump and an injection pump and including a double plunger, said double plunger comprising a pair of concentric plungers of different diameter, the smaller constituting an injection plunger and the larger a supply plunger, a cylinder forming a pump chamber for said supply plunger, a cylinder sleeve having a bore forming a pump chamber for said injection plunger, said sleeve having one end terminating in said supply pump chamber, a pressure supply chamber formed in said pump housing and common to all of said units for receiving fuel discharged from said supply pump chambers, and conveying the same to said injection pump chambers said sleeve having a portion of larger diameter than said cylinder of said supply pump, a cylinder head having a portion bearing upon said enlarged portion of said sleeve whereby any cylinder unit of said pump may be removed as a whole upon removal of the corresponding cylinder head.

12. A combined supply and injection pump for internal combustion engines comprising a pump housing, a plurality of cylinder units mounted in said housing, each unit constituting a supply pump and an injection pump and including a double plunger, said double plunger comprising a pair of concentric plungers of different diameter, the smaller constituting an injection plunger and the larger a supply plunger, a cylinder forming a pump chamber for said supply plunger; a cylinder sleeve having a bore forming a pump chamber for said injection plunger, said sleeve having one end terminating in said supply pump chamber, a pressure supply chamber formed in said pump housing and common to all of said units for receiving fuel discharged from said supply pump chambers, and conveying the same to said injection pump chamber a hydraulic control device rigidly connected with said housing and actuated by the pressure in said pressure supply chamber a discharge chamber within said housing in communication with the discharge side of said hydraulic control device and in communication with the suction side of said supply pump internally of said housing.

13. A combined supply and injection pump for internal combustion engines comprising a pump housing, a plurality of cylinder units mounted in said housing, each unit constituting a supply pump and an injection pump and including a double plunger, said double plunger comprising a pair of concentric plungers of different diameter, the smaller constituting an injection plunger and the larger a supply plunger, a cylinder forming a pump chamber for said supply plunger, a cylinder sleeve having a bore forming a pump chamber for said injection plunger, said sleeve having one end terminating in said supply pump chamber, a pressure supply chamber formed in said pump housing and common to all of said units for receiving fuel discharged from said supply pump chambers, and conveying the same to said injection pump chamber a hydraulic control device rigidly connected with said housing and actuated by the pressure in said pressure supply chamber a discharge chamber within said housing in communication with the discharge side of said hydraulic control device and in communication with the suction side of said supply pump internally of said housing, and means for discharging fuel from said pressure chamber to said discharge chamber upon excessive pressure in said pressure chamber.

14. A fuel injection pump including a cylinder, a plunger reciprocative in said cylinder, said cylinder having a by-pass passage controlled by said plunger, means to rotate said plunger to vary the quantity of fuel supplied by said pump by altering the quantity of fuel ejected through said by-pass passage, said cylinder having inlet passages also controlled by said plunger to admit fuel into said cylinder when said plunger approaches the end of its suction stroke, said inlet passages being spaced circumferentially and longitudinally of said cylinder and said plunger having an inclined lip corresponding to the inclination defined by the spacing of said inlet passages, whereby rotation of said plunger to vary quantity of fuel ejected through said by-pass passage also slightly restricts the openings of said inlet passages into said cylinder to reduce the quantity of fuel admitted to said cylinder through said inlet passage at high speeds of said pump.

15. A fuel injection pump including a housing, a plurality of pump cylinders disposed in said housing, said housing having a cavity formed in one side thereof constituting a fuel supply sump common to all of said cylinders, a face plate detachably secured to said housing and forming a closure for said cavity, a second cavity formed in the opposite side of said housing from said first mentioned cavity and forming a reservoir for lubricant, and a second face plate detachably secured to said housing forming a closure for said second cavity.

16. A fuel injection pump including a housing, a plurality of pump cylinders disposed in said housing, said housing having a cavity formed in one side thereof constituting a fuel supply sump common to all of said cylinders, a face plate detachably secured to said housing and forming a closure for said cavity, means to supply fuel to said cavity through said face plate, a second cavity formed in the opposite side of said housing from said first mentioned cavity and forming a reservoir for lubricant, a second face plate detachably secured to said housing forming a closure for said second cavity, and means to supply lubricant to said second cavity through said second face plate.

17. A fuel injection pump including a housing, a plurality of pump cylinders disposed in said housing, said housing having a cavity formed in one side thereof constituting a fuel supply sump

common to all of said cylinders, a face plate detachably secured to said housing and forming a closure for said cavity, means to supply fuel to said cavity through said face plate, a second cavity formed in the opposite side of said housing from said first mentioned cavity and forming a reservoir for lubricant, a second face plate detachably secured to said housing forming a closure for said second cavity, means to supply lubricant to said second cavity through said second face plate, and filters adjacent each of said face plates for filtering the fuel and lubricant passing to said cavities through said face plates.

LOUIS BEEH.