(12) INTERNATIONAL APPLICATION PUBLISHED UNDER THE PATENT COOPERATION TREATY (PCT)

(19) World Intellectual Property Organization
International Bureau

(43) International Publication Date
2 April 2015 (02.04.2015)

WIPO | PCT

(10) International Publication Number
WO 2015/044745 A1

(51) International Patent Classification:
B62D 21/15 (2006.01)

(21) International Application Number:
PCT/IB2014/001903

(22) International Filing Date:
23 September 2014 (23.09.2014)

(25) Filing Language: English

(26) Publication Language: English

(30) Priority Data:
2013-202260 27 September 2013 (27.09.2013) JP

(71) Applicant: **TOYOTA JIDOSHA KABUSHIKI KAISHA** [JP/JP]; 1, Toyota-cho, Toyota-shi, Aichi-ken, 471-8571 (JP).

(72) Inventor: **TAKEI, Yasumichi**; c/o TOYOTA JIDOSHA KABUSHIKI KAISHA, of 1, Toyota-cho, Toyota-shi, Aichi-ken, 471-8571 (JP).

(81) Designated States *(unless otherwise indicated, for every kind of national protection available)*: AE, AG, AL, AM, AO, AT, AU, AZ, BA, BB, BG, BH, BN, BR, BW, BY, BZ, CA, CH, CL, CN, CO, CR, CU, CZ, DE, DK, DM, DO, DZ, EC, EE, EG, ES, FI, GB, GD, GE, GH, GM, GT, HN, HR, HU, ID, IL, IN, IR, IS, KE, KG, KN, KP, KR, KZ, LA, LC, LK, LR, LS, LU, LY, MA, MD, ME, MG, MK, MN, MW, MX, MY, MZ, NA, NG, NI, NO, NZ, OM, PA, PE, PG, PH, PL, PT, QA, RO, RS, RU, RW, SA, SC, SD, SE, SG, SK, SL, SM, ST, SV, SY, TH, TJ, TM, TN, TR, TT, TZ, UA, UG, US, UZ, VC, VN, ZA, ZM, ZW.

(84) Designated States *(unless otherwise indicated, for every kind of regional protection available)*: ARIPO (BW, GH, GM, KE, LR, LS, MW, MZ, NA, RW, SD, SL, ST, SZ, TZ, UG, ZM, ZW), Eurasian (AM, AZ, BY, KG, KZ, RU, TJ, TM), European (AL, AT, BE, BG, CH, CY, CZ, DE, DK, EE, ES, FI, FR, GB, GR, HR, HU, IE, IS, IT, LT, LU, LV, MC, MK, MT, NL, NO, PL, PT, RO, RS, SE, SI, SK, SM, TR), OAPI (BF, BJ, CF, CG, CI, CM, GA, GN, GQ, GW, KM, ML, MR, NE, SN, TD, TG).

Published:

— *with international search report (Art. 21(3))*

— *before the expiration of the time limit for amending the claims and to be republished in the event of receipt of amendments (Rule 48.2(h))*

WO 2015/044745 A1

(54) Title: VEHICLE LOWER STRUCTURE

FIG. 1

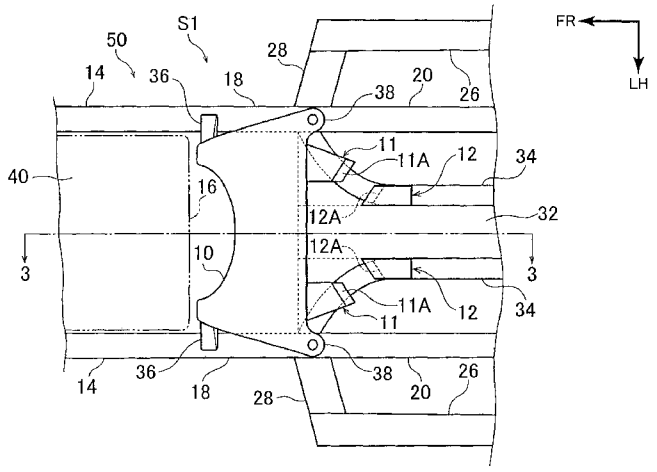

(57) Abstract: A vehicle lower structure (S1) includes a suspension member (10); a first projecting portion (11) provided in the suspension member (10) so as to project toward a vehicle rear side of the suspension member (10); a second projecting portion (12) provided in an underfloor of a passenger compartment (30) so as to project toward a vehicle lower side, the second projecting portion (12) being placed on a vehicle rear side and a vehicle width inner side relative to the first projecting portion (11) so as not to overlap with the first projecting portion (11) when viewed in a vehicle front-rear direction, the second projecting portion (12) being configured to interfere with the first projecting portion (11) when the suspension member (10) moves toward the vehicle width inner side and toward a diagonal rear side in the vehicle front-rear direction in a plane view.

VEHICLE LOWER STRUCTURE

BACKGROUND OF THE INVENTION

1. Field of the Invention

[0001] The present invention relates to a vehicle lower structure.

2. Description of Related Art

[0002] There has been described a structure configured such that, upon receipt of a collision load, a suspension member inclined surface interferes with a body-side inclined surface, so as to improve a vehicle deceleration characteristic in the second half of the collision (see Japanese Patent Application Publication No. 2004-284427 (JP 2004-284427 A)). The suspension member inclined surface is formed on a vehicle-body front side of a mounting portion of a suspension member with respect to a body, and is inclined from a vehicle-body front upper side toward a vehicle-body rear lower side. The body-side inclined surface is formed in that body-side part on a vehicle-body rear side which is opposed generally parallel to the suspension member inclined surface.

[0003] However, the related art described above does not particularly consider other collision types except a front collision (full-lap collision). In view of this, there is still room for improvement to cope with an oblique collision.

SUMMARY OF THE INVENTION

[0004] The present invention makes it possible to secure a vehicle deceleration characteristic at the time of a front collision, and to transmit a load from a suspension member to an underfloor of a vehicle body at the time of an oblique collision.

[0005] A vehicle lower structure includes a suspension member placed on a front side and a lower side of a vehicle body; a first projecting portion provided in the suspension member, the first projecting portion projecting toward a vehicle rear side of the suspension member; and a second projecting portion provided in an underfloor of a passenger compartment, the second projecting portion projecting toward a vehicle lower side, the second projecting portion being placed on a vehicle rear side and a vehicle width inner side relative to the first projecting portion, the second projecting portion overlapping with the first projecting portion when viewed in a vehicle front-rear direction, the second

CONFIRMATION COPY

projecting portion being interfered with the first projecting portion when the suspension member moves toward the vehicle width inner side and toward a diagonal rear side in the vehicle front-rear direction in a plane view.

[0006] In the vehicle lower structure, since the first projecting portion provided in the suspension member and the second projecting portion provided in the underfloor are placed, the second projecting portion overlapping with each other when viewed in the vehicle front-rear direction, even if the vehicle body deforms due to a front collision and the suspension member moves rearward, the first projecting portion does not interfere with the second projecting portion. Accordingly, it is possible to secure a vehicle deceleration characteristic at the time of the front collision.

[0007] Further, when the suspension member moves toward the vehicle width inner side and toward the diagonal rear side in the vehicle front-rear direction in a plane view at the time of an oblique collision, the second projecting portion interferes with the first projecting portion. Accordingly, it is possible to transmit a load from the suspension member to the underfloor of the vehicle body at the time of the oblique collision.

[0008] As described above, according to the vehicle lower structure, it is possible to obtain excellent effects of securing a vehicle deceleration characteristic at the time of a front collision, and of transmitting a load from the suspension member to the underfloor of the vehicle body at the time of an oblique collision.

[0009] In the vehicle lower structure, the first projecting portion may have a load transfer surface, the load transfer surface facing diagonally rearward toward the vehicle width inner side in the vehicle front-rear direction; and the second projecting portion may have a load receiving surface, the load receiving surface facing diagonally forward toward the vehicle width outer side in the vehicle front-rear direction.

[0010] In the vehicle lower structure, when the second projecting portion interferes with the first projecting portion in an oblique collision, the load transfer surface of the first projecting portion abuts with the load receiving surface of the second projecting portion. Since the load transfer surface is diagonally opposed to the load receiving surface in the vehicle front-rear direction, misalignment between the second projecting portion and the first projecting portion is hard to occur. This makes it possible to effectively transmit a load from the suspension member to the underfloor of the vehicle body at the time of the oblique collision.

[0011] According to the vehicle lower structure, it is possible to obtain such an

excellent effect of effectively transmitting a load from the suspension member to the underfloor of the vehicle body at the time of an oblique collision.

[0012] In the vehicle lower structure, the load receiving surface may face diagonally upward in the vehicle front-rear direction.

[0013] In the vehicle lower structure, since the load receiving surface of the second projecting portion faces diagonally upward in the vehicle front-rear direction, when the second projecting portion interferes with the first projecting portion, the first projecting portion is restrained from deviating toward the vehicle lower side of the second projecting portion. This makes it possible to further effectively transmit a load from the suspension member to the underfloor of the vehicle body at the time of an oblique collision.

[0014] According to the vehicle lower structure, it is possible to obtain such an excellent effect of further effectively transmitting a load from the suspension member to the underfloor of the vehicle body at the time of an oblique collision.

[0015] In the vehicle lower structure, the underfloor is a tunnel reinforcement, the tunnel reinforcement reinforcing a tunnel portion provided in a central part of a floor of the passenger compartment in the vehicle width direction.

[0016] In the vehicle lower structure, since the second projecting portion is provided in the tunnel reinforcement, it is possible to transmit a load from the suspension member to the tunnel reinforcement at the time of an oblique collision.

[0017] According to the vehicle lower structure, it is possible to obtain such an excellent effect of transmitting a load from the suspension member to the tunnel reinforcement at the time of an oblique collision.

[0018] In the vehicle lower structure, either one of the first projecting portion and the second projecting portion may have a projection surface formed in a curved surface in a bottom view; and the other one of the first projecting portion and the second projecting portion may have a recessed surface diagonally opposed to the projection surface in the vehicle front-rear direction.

[0019] In the vehicle lower structure, at the time of an oblique collision, the first projecting portion interferes with the second projecting portion due to abutment between the projection surface and the recessed surface. This makes it possible to stably transmit a load from the suspension member to the underfloor.

[0020] According to the vehicle lower structure, it is possible to obtain such an excellent effect of stably transmitting a load from the suspension member to the underfloor

at the time of an oblique collision.

BRIEF DESCRIPTION OF THE DRAWINGS

[0021] Features, advantages, and technical and industrial significance of exemplary embodiments of the invention will be described below with reference to the accompanying drawings, in which like numerals denote like elements, and wherein:

FIG. 1 is a bottom view illustrating a vehicle lower structure according to a first embodiment;

FIG. 2 is a perspective view illustrating the vehicle lower structure according to the first embodiment when viewed from a vehicle lower side;

FIG. 3 is a sectional view taken along an arrow 3-3 in FIG. 1, illustrating the vehicle lower structure according to the first embodiment;

FIG. 4 is a bottom view illustrating a positional relationship between a first projecting portion and a second projecting portion, according to the first embodiment;

FIG. 5 is a bottom view illustrating a state where the first projecting portion and the second projecting portion do not interfere with each other at the time of a front collision, according to the first embodiment;

FIG. 6 is a bottom view illustrating a state where the first projecting portion and the second projecting portion interfere with each other at the time of an oblique collision, according to the first embodiment;

FIG. 7A is a bottom view illustrating a vehicle lower structure according to a second embodiment in a normal time and also illustrating a state where a first projecting portion and a second projecting portion thereof do not interfere with each other at the time of a front collision;

FIG. 7B is a bottom view illustrating a state where the first projecting portion and the second projecting portion interfere with each other at the time of an oblique collision, according to the second embodiment;

FIG. 8A is a bottom view illustrating a vehicle lower structure according to a third embodiment in a normal time and also illustrating a state where a first projecting portion and a second projecting portion thereof do not interfere with each other at the time of a front collision; and

FIG. 8B is a bottom view illustrating a state where the first projecting portion and the second projecting portion interfere with each other at the time of an oblique collision,

PCT/IB2014/001903

according to the third embodiment.

DETAILED DESCRIPTION OF EMBODIMENTS

[0022] Embodiments of the present invention are described below with reference to the drawings.

[0023] [First Embodiment] In FIGS. 1 to 3, a vehicle lower structure S1 according to the present embodiment includes a suspension member 10, a first projecting portion 11, and a second projecting portion 12.

[0024] As illustrated in FIG. 1, a pair of right and left front side members 14 extending in a vehicle front-rear direction is provided in a vehicle front portion at an interval in a vehicle width direction. An engine 16, for example, is provided between the pair of front side members 14. A rear part of each of the front side members 14 serves as a kick part 18 that is inclined diagonally downward toward a vehicle rear side. A side member 20 extending in the vehicle front-rear direction is provided continuously from a rear end of the kick part 18. As illustrated in FIG. 3, a front part of the front side member 14 is placed on a vehicle upper side relative to the side member 20.

[0025] As illustrated in FIGS. 2, 3, a floor panel 22 constituting a floor of a passenger compartment 30 is joined onto the side member 20 and the kick part 18. A front part of the floor panel 22, for example, that part of the floor panel 22 which is joined to the kick part 18 is a dash panel (a passenger-compartment front wall) 24. The dash panel 24 may be integrated with the floor panel 22, or may be formed separately from the floor panel 22.

[0026] As illustrated in FIG. 1, a rocker 26 extending in the vehicle front-rear direction is provided adjacent to each of the side members 20 in the vehicle width direction. A front end of the rocker 26 is connected to the front side member 14 via a torque box 28, for example.

[0027] As illustrated in FIGS. 1, 2, a tunnel portion 32 extending in the vehicle front-rear direction is provided in a central portion, in the vehicle width direction, of an underfloor of the passenger compartment 30. A tunnel reinforcement 34 extending mainly along the tunnel portion 32 is provided on a bottom side of the floor panel 22. The tunnel reinforcement 34 is a member that reinforces the tunnel portion 32. A front end of the tunnel reinforcement 34 curves outwardly in the vehicle width direction so as to be connected to the side member 20. A connection position between the tunnel

PCT/IB2014/001903

reinforcement 34 and the side member 20 in the vehicle front-rear direction generally coincides with a connection position between the side member 20 and the torque box 28.

[0028] As illustrated in FIG. 2, each of the side member 20, the tunnel reinforcement 34, and the torque box 28 is formed to have a hat-shaped section, for example, and joined to the floor panel 22 so as to form a closed section structure.

[0029] The suspension member 10 is placed on a front side and a lower side of a vehicle body 50, e.g., in a lower part of a space 40 (FIG. 3) on a vehicle front side of the passenger compartment 30. The space 40 is an engine compartment, for example. More specifically, as illustrated in FIG. 3, a front part of the suspension member 10 is suspended from the front side member 14 via a suspending member 36. Further, as illustrated in FIGS. 1, 2, a rear part of the suspension member 10 is fastened to a bottom face of the side member 20.

[0030] In FIGS. 1 to 3, the first projecting portion 11 is provided in the suspension member 10, and projects toward the vehicle rear side of the suspension member 10. The first projecting portion 11 is a metal or resin member formed to have a closed section or formed in a solid, for example, and has a load transfer surface 11A that faces diagonally rearward toward a vehicle width inner side in the vehicle front-rear direction. The load transfer surface 11A is formed in a plane manner, for example, and faces diagonally downward in the vehicle front-rear direction.

[0031] In FIGS. 1 to 3, the second projecting portion 12 is provided in the underfloor of the passenger compartment 30 so as to project toward a vehicle lower side. The second projecting portion 12 is placed on the vehicle rear side and the vehicle width inner side relative to the first projecting portion 11 and is placed so as not to overlap with the first projecting portion 11 when viewed in the vehicle front-rear direction. The underfloor is the tunnel reinforcement 34, for example. The second projecting portion 12 is a metal member formed in a hollow or solid shape, for example, and has a load receiving surface 12A that faces diagonally forward toward a vehicle width outer side in the vehicle front-rear direction. The load receiving surface 12A faces diagonally upward in the vehicle front-rear direction. The load receiving surface 12A is diagonally opposed to the load transfer surface 11A in the vehicle front-rear direction when viewed in a bottom view. When the suspension member 10 moves toward the vehicle rear side in a plane view, the second projecting portion 12 does not interfere with the first projecting portion 11. However, when the suspension member 10 moves toward the vehicle width inner side and

toward a diagonal rear side in the vehicle front-rear direction in a plane view, the second projecting portion 12 interferes with the first projecting portion 11.

[0032] That the first projecting portion 11 does not overlap with the second projecting portion 12 when viewed in the vehicle front-rear direction indicates a configuration that the first projecting portion 11 does not abut with the second projecting portion 12 within a range of deformation of the vehicle body at the time of a front collision. Accordingly, a portion where the first projecting portion 11 and the second projecting portion 12 overlap with each other in the vehicle front-rear direction may be set in a region beyond the range of the deformation of the vehicle body.

[0033] In FIG. 4, in order that the first projecting portion 11 and the second projecting portion 12 do not overlap with each other when viewed in the vehicle front-rear direction, a distance W between the first projecting portion 11 and the second projecting portion 12 in the vehicle width direction is 5 to 10 mm, for example. A distance D between the first projecting portion 11 and the second projecting portion 12 in the vehicle front-rear direction is 50 to 100 mm, for example. The distance D is a distance before the load transfer surface 11A abuts with the load receiving surface 12A.

[0034] Respective inclination angles θ of the load transfer surface 11A and the load receiving surface 12A with respect to the vehicle width direction in a bottom view are 30°, for example.

[0035] As illustrated in FIG. 1, the first projecting portion 11 and the second projecting portion 12 are placed symmetrically on either side in the vehicle width direction. Hereby, an oblique collision from a vehicle right side and an oblique collision from a vehicle left side can be both managed.

[0036] A position of the first projecting portion 11 in a vehicle up-down direction is generally the same as a position of the second projecting portion 12 in the vehicle up-down direction. However, their respective height dimensions may not be the same, and the height dimension of the first projecting portion 11 may be smaller than the height dimension of the second projecting portion 12, for example.

[0037] (Effects) The present embodiment is configured as described above, and its effects are described below. In FIG. 1, in the vehicle lower structure S1 according to the present embodiment, the first projecting portion 11 provided in the suspension member 10 and the second projecting portion 12 provided in the tunnel reinforcement 34 (the underfloor) are placed so as not to overlap with each other when viewed in the vehicle

front-rear direction. Accordingly, as illustrated in FIG. 5, even if the vehicle body deforms or the engine 16 moves rearward due to a front collision and the suspension member 10 moves rearward in a direction of an arrow A along the vehicle front-rear direction, the first projecting portion 11 does not interfere with the second projecting portion 12. Accordingly, it is possible to secure a vehicle deceleration characteristic at the time of the front collision.

[0038] Further, in FIG. 6, when the vehicle body deforms or the engine 16 moves rearward due to an oblique collision and the suspension member 10 moves in a direction of an arrow B toward the vehicle width inner side and toward the diagonal rear side in the vehicle front-rear direction in a plane view, the second projecting portion 12 interferes with the first projecting portion 11. At the time when the second projecting portion 12 interferes with the first projecting portion 11 in the oblique collision, the load transfer surface 11A of the first projecting portion 11 abuts with the load receiving surface 12A of the second projecting portion 12. At this time, since the load transfer surface 11A is diagonally opposed to the load receiving surface 12A in the vehicle front-rear direction, misalignment between the second projecting portion 12 and the first projecting portion 11 is hard to occur. Further, as illustrated in FIGS. 2, 3, since the load receiving surface 12A of the second projecting portion 12 faces diagonally upward in the vehicle front-rear direction, when the second projecting portion 12 interferes with the first projecting portion 11, the first projecting portion 11 is restrained from deviating toward the vehicle lower side of the second projecting portion 12. In view of this, even if a mechanism for detaching the suspension member 10 from the vehicle body 50 at the time of a front collision is provided, it is possible to keep the suspension member 10 without detaching the suspension member 10 from the vehicle body 50 at the time of an oblique collision.

[0039] Based on the foregoing, in the present embodiment, it is possible to effectively transmit a load from the suspension member 10 to the underfloor of the vehicle body at the time of an oblique collision. Particularly, since the second projecting portion 12 is provided in the tunnel reinforcement 34, it is possible to transmit a load from the suspension member 10 to the tunnel reinforcement 34 at the time of an oblique collision. Besides, it is possible to prevent the suspension member 10 from penetrating into the passenger compartment 30 at the time of an oblique collision.

[0040] [Second Embodiment] In FIG. 7A, a vehicle lower structure S2 according to the present embodiment is configured such that either one of a first projecting portion 11

and a second projecting portion 12 includes a projection surface 42 formed in a curved surface in a bottom view, and the other one of the first projecting portion 11 and the second projecting portion 12 includes a recessed surface 44 diagonally opposed to the projection surface 42 in the vehicle front-rear direction.

[0041] In the example illustrated in FIG. 7A, the first projecting portion 11 includes the projection surface 42, and the second projecting portion 12 includes the recessed surface 44. The projection surface 42 is formed such that a rear end of the first projecting portion 11 is formed to have an arc-shape contour in a bottom view. Note that the contour of the projection surface 42 is not limited to the arc shape, and may be a polygonal -line shape. Further, the first projecting portion 11 may be formed to have a columnar shape in which its longitudinal direction is along the vehicle up-down direction.

[0042] The recessed surface 44 is formed in a front end of the second projecting portion 12 so as to have an arc shape, for example, in a bottom view, and faces diagonally forward toward the vehicle width outer side in the vehicle front-rear direction so that the recessed surface 44 can easily receive the projection surface 42. A curvature of the arc of the recessed surface 44 is smaller than a curvature of the projection surface 42. In other words, a curvature radius of the arc of the recessed surface 44 is larger than a curvature radius of the projection surface 42. Note that the recessed surface 44 may have any shape provided that the recessed surface 44 can easily receive the projection surface 42. In view of this, the shape of the recessed surface 44 is not limited to the arc shape, and may be a V shape or the like.

[0043] The other portions in the present embodiment are the same as in the first embodiment. The same portion as in the first embodiment has the same reference sign as in the first embodiment, and a description thereof is omitted.

[0044] (Effects) The present embodiment is configured as described above, and its effects are described below. In FIG. 7A, in the vehicle lower structure S2 according to the present embodiment, even if the vehicle body deforms or an engine 16 moves rearward due to a front collision and the suspension member 10 moves rearward in a direction of an arrow A along the vehicle front-rear direction, the first projecting portion 11 does not interfere with the second projecting portion 12. Accordingly, it is possible to secure a vehicle deceleration characteristic at the time of the front collision.

[0045] As illustrated in FIG. 7B, at the time of an oblique collision, the first projecting portion 11 interferes with the second projecting portion 12 due to abutment

between the projection surface 42 and the recessed surface 44. Since the recessed surface 44 faces diagonally forward toward the vehicle width outer side in the vehicle front-rear direction, the recessed surface 44 can easily receive the projection surface 42. This makes it possible to stably transmit a load from the suspension member 10 to a tunnel reinforcement 34 (the underfloor).

[0046] [Third Embodiment] In FIG. 8A, a vehicle lower structure S3 according to the present embodiment is configured such that a first projecting portion 11 includes a recessed surface 44, and a second projecting portion 12 includes a projection surface 42. The recessed surface 44 is formed such that a rear end of the first projecting portion 11 is formed to have an arc shape in a bottom view, and faces diagonally rearward toward the vehicle width inner side in the vehicle front-rear direction so that the recessed surface 44 can easily catch the projection surface 42. Note that the recessed surface 44 may have any shape provided that the recessed surface 44 can easily catch the projection surface 42. In view of this, the shape of the recessed surface 44 is not limited to the arc shape, and may be a V shape or the like.

[0047] The second projecting portion 12 has a columnar shape in which its longitudinal direction is along the vehicle up-down direction, for example. The projection surface 42 is an outer peripheral surface of the second projecting portion 12. Note that the projection surface 42 may be formed such that a front end of the second projecting portion 12 is formed to have an arc-shape contour in a bottom view. The second projecting portion 12 may be formed in a rectangular column shape or a polygonal columnar shape. In this case, the contour of the projection surface 42 has a polygonal -line shape in a bottom view.

[0048] The other portions in the present embodiment are the same as in the first embodiment and the second embodiment. The same portion as in the first embodiment and the second embodiment has the same reference sign as in the first embodiment and the second embodiment, and a description thereof is omitted.

[0049] (Effects) The present embodiment is configured as described above, and its effects are described below. In FIG. 8A, in the vehicle lower structure S3 according to the present embodiment, even if the vehicle body deforms or an engine 16 moves rearward due to a front collision and the suspension member 10 moves rearward in a direction of an arrow A along the vehicle front-rear direction, the first projecting portion 11 does not interfere with the second projecting portion 12. Accordingly, it is possible to secure a

PCT/IB2014/001903

vehicle deceleration characteristic at the time of the front collision.

[0050] As illustrated in FIG. 8B, at the time of an oblique collision, the first projecting portion 11 interferes with the second projecting portion 12 due to abutment between the recessed surface 44 and the projection surface 42. Since the recessed surface 44 faces diagonally rearward toward the vehicle width inner side in the vehicle front-rear direction, the recessed surface 44 can easily catch the projection surface 42. This makes it possible to stably transmit a load from the suspension member 10 to a tunnel reinforcement 34 (the underfloor).

[0051] [Other Embodiments] In the first embodiment, the first projecting portion 11 has the load transfer surface 11A that faces diagonally rearward toward the vehicle width inner side in the vehicle front-rear direction, and the second projecting portion 12 has the load receiving surface 12A that faces diagonally forward toward the vehicle width outer side in the vehicle front-rear direction. However, the first projecting portion 11 and the second projecting portion 12 are not limited to the above as along as a load is transmittable therebetween at the time of an oblique collision. Accordingly, the first projecting portion 11 and the second projecting portion 12 may be configured so as not to have the load transfer surface 11A and the load receiving surface 12A. The first projecting portion 11 and the second projecting portion 12 may be engaged with each other at the time of an oblique collision.

[0052] In the first embodiment, the load transfer surface 11A faces diagonally downward in the vehicle front-rear direction, and the load receiving surface 12A faces diagonally upward in the vehicle front-rear direction. However, this is not the only option, and at least one of the load transfer surface 11A and the load receiving surface 12A may face diagonally upward or downward in the vehicle front-rear direction. In other words, at least one of the load transfer surface 11A and the load receiving surface 12A may be parallel to the vehicle front-rear direction.

[0053] In the second embodiment and the third embodiment, the projection surface 42 and the recessed surface 44 are not limited to a smooth surface, and may have an irregular shape and holes.

[0054] The tunnel reinforcement 34 is taken as an example of the underfloor. However, the underfloor is not limited to this, and may be a part suitable for load transfer. Accordingly, the underfloor may be a floor cross member or the like (not shown).

[0055] The second projecting portion 12 is provided integrally with the tunnel

PCT/IB2014/001903

reinforcement 34, or may be provided integrally with the side member 20. In a case where the second projecting portion 12 is provided in the side member 20, the first projecting portion 11 is placed on the vehicle width inner side relative to the second projecting portion 12. Embodiments of the present invention have been described above, but the present invention is not limited to the above and may be modified in various ways to be performed as long as the modified examples are not beyond the gist thereof.

CLAIMS:

1. A vehicle lower structure comprising:

a suspension member placed on a front side and a lower side of a vehicle body;

a first projecting portion provided in the suspension member, the first projecting portion projecting toward a vehicle rear side of the suspension member; and

a second projecting portion provided in an underfloor of a passenger compartment, the second projecting portion projecting toward a vehicle lower side, the second projecting portion being placed on a vehicle rear side and a vehicle width inner side relative to the first projecting portion, the second projecting portion not overlapping with the first projecting portion when viewed in a vehicle front-rear direction, the second projecting portion being interfered with the first projecting portion when the suspension member moves toward the vehicle width inner side and toward a diagonal rear side in the vehicle front-rear direction in a plane view.

2. The vehicle lower structure according to claim 1, wherein:

the first projecting portion has a load transfer surface, the load transfer surface facing diagonally rearward toward the vehicle width inner side in the vehicle front-rear direction; and

the second projecting portion has a load receiving surface, the load receiving surface facing diagonally forward toward a vehicle width outer side in the vehicle front-rear direction.

3. The vehicle lower structure according to claim 2, wherein:

the load receiving surface faces diagonally upward in the vehicle front-rear direction.

4. The vehicle lower structure according to any one of claims 1 to 3, wherein:

the underfloor is a tunnel reinforcement, the tunnel reinforcement reinforcing a tunnel portion provided in a central part of a floor of the passenger compartment in a vehicle width direction.

5. The vehicle lower structure according to claim 1, wherein:

either one of the first projecting portion and the second projecting portion has a

projection surface formed in a curved surface in a bottom view; and

the other one of the first projecting portion and the second projecting portion has a recessed surface diagonally opposed to the projection surface in the vehicle front-rear direction.

5

PCT/IB2014/001903

FIG. 1

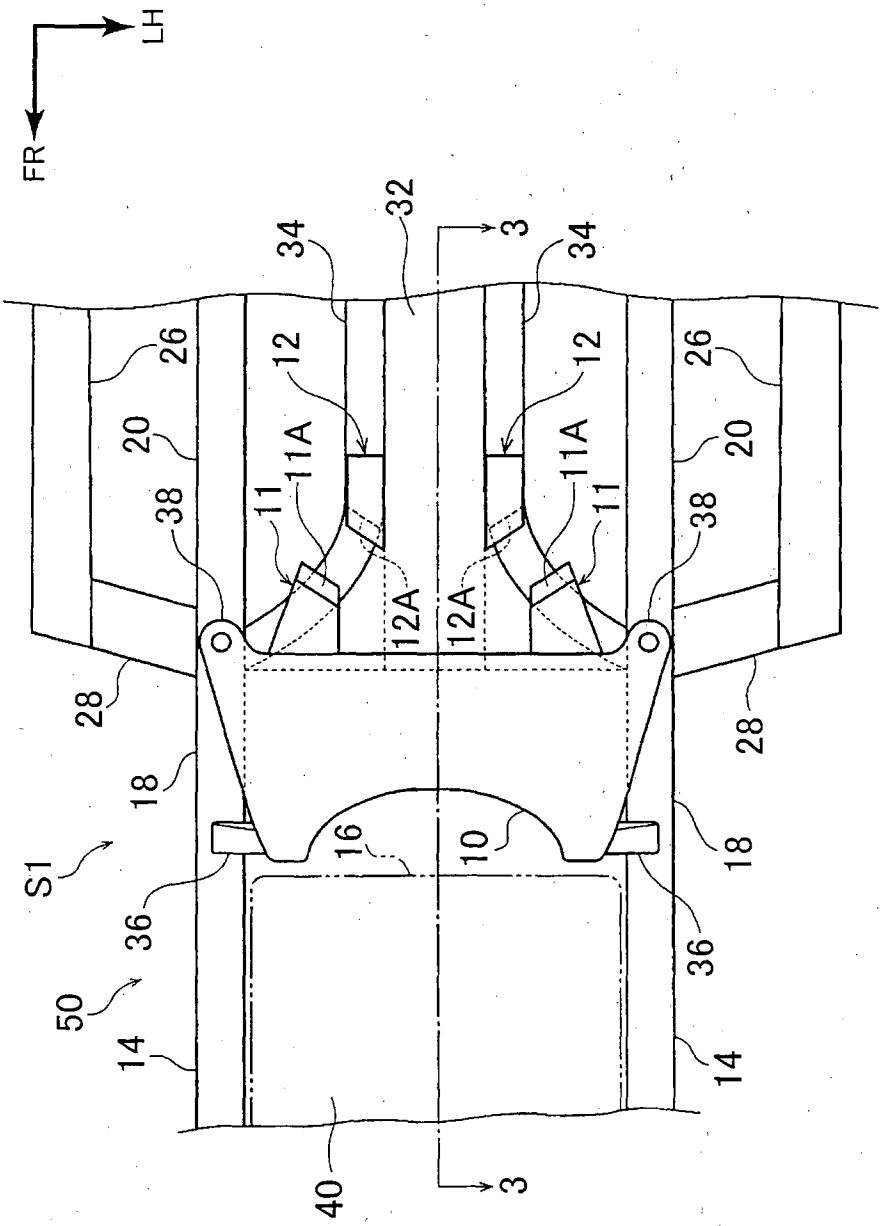

PCT/IB2014/001903

FIG. 2

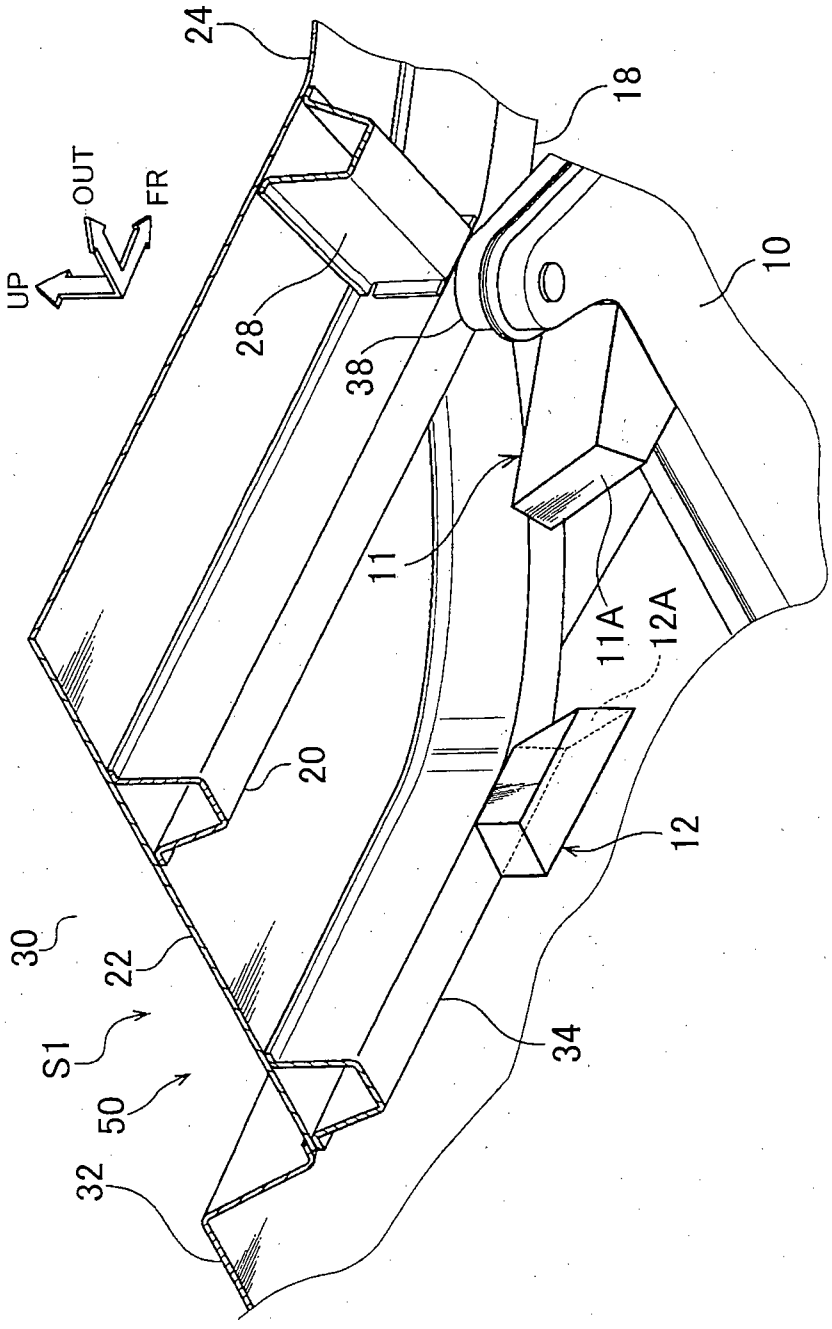

PCT/IB2014/001903

FIG. 3

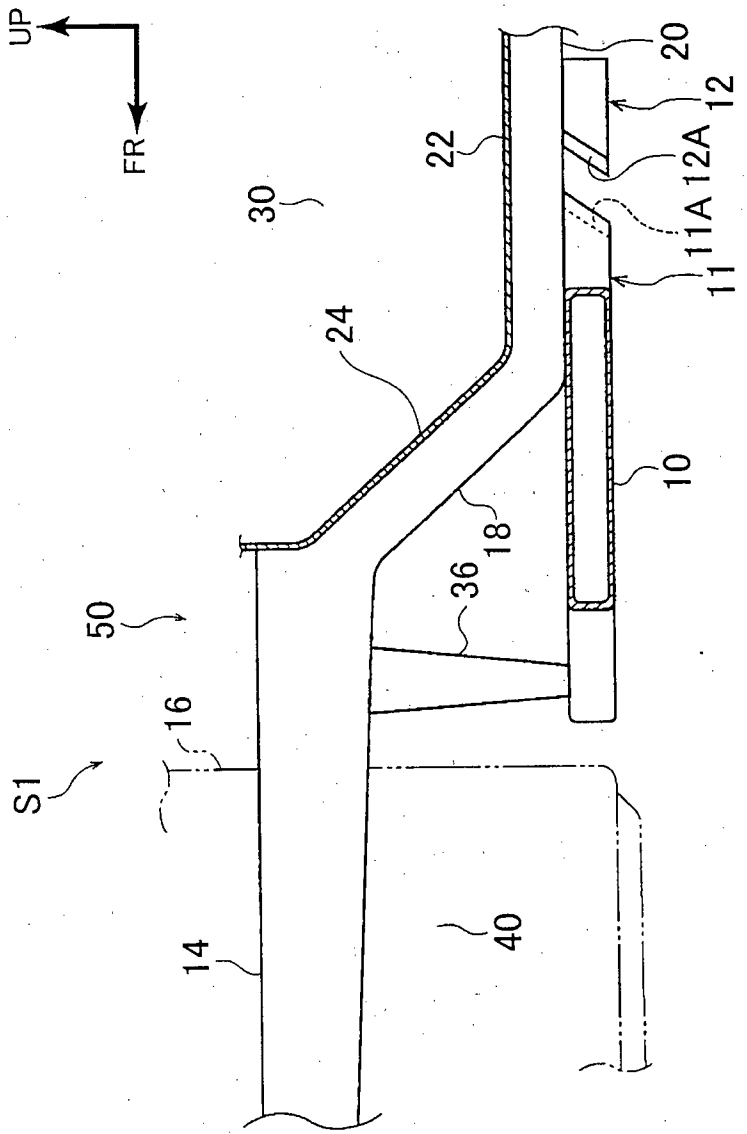

FIG. 4

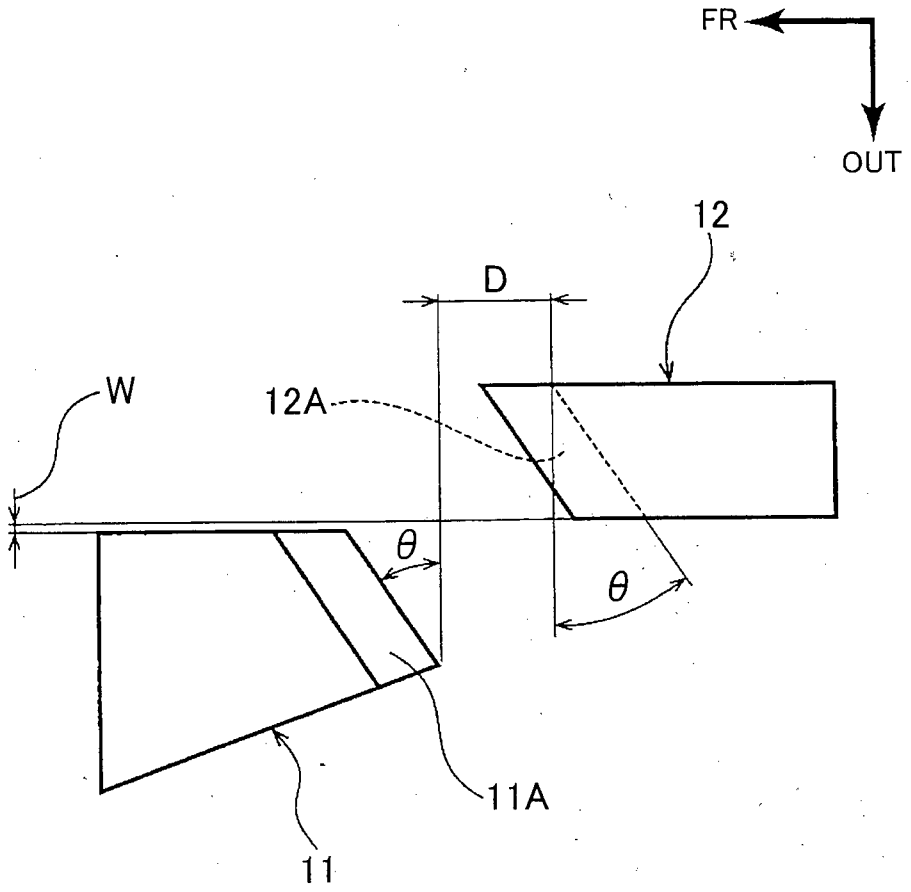

FIG. 5

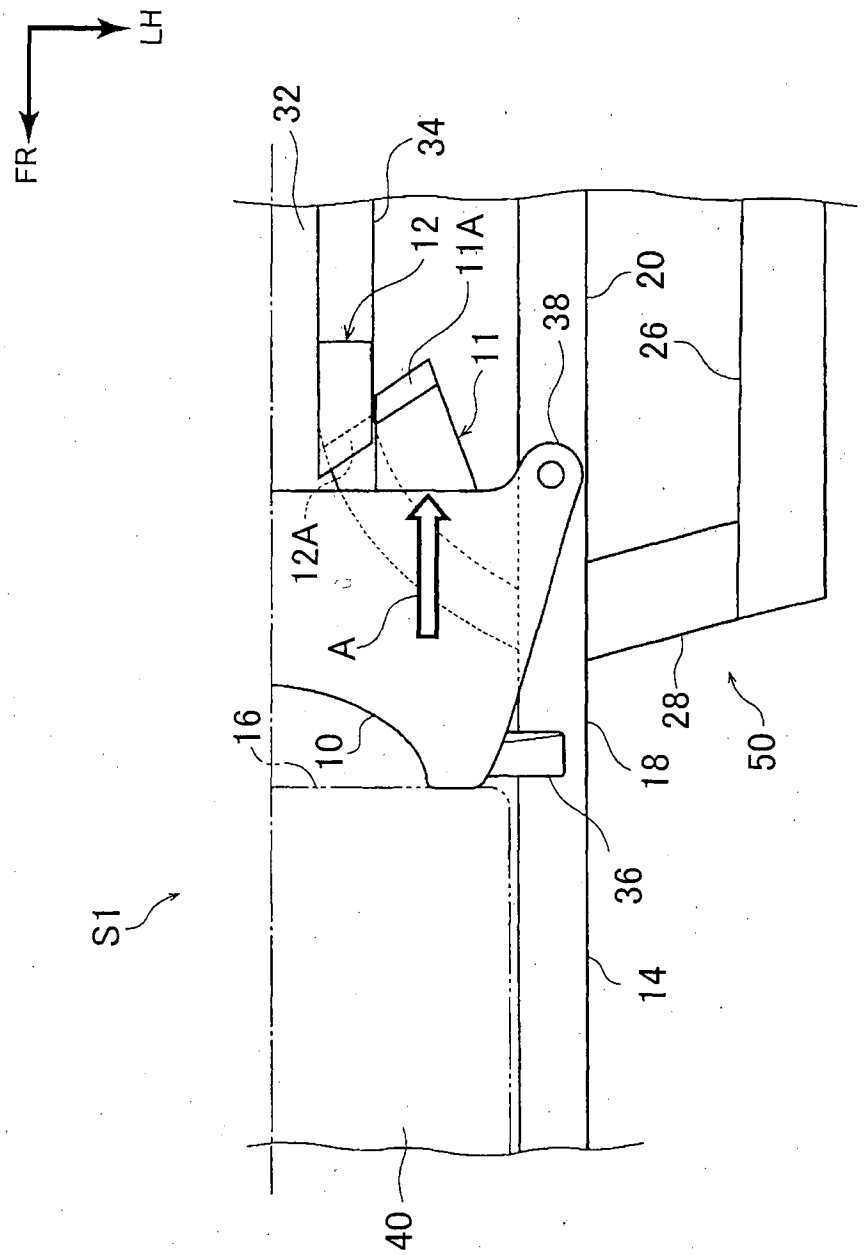

PCT/IB2014/001903

FIG. 6

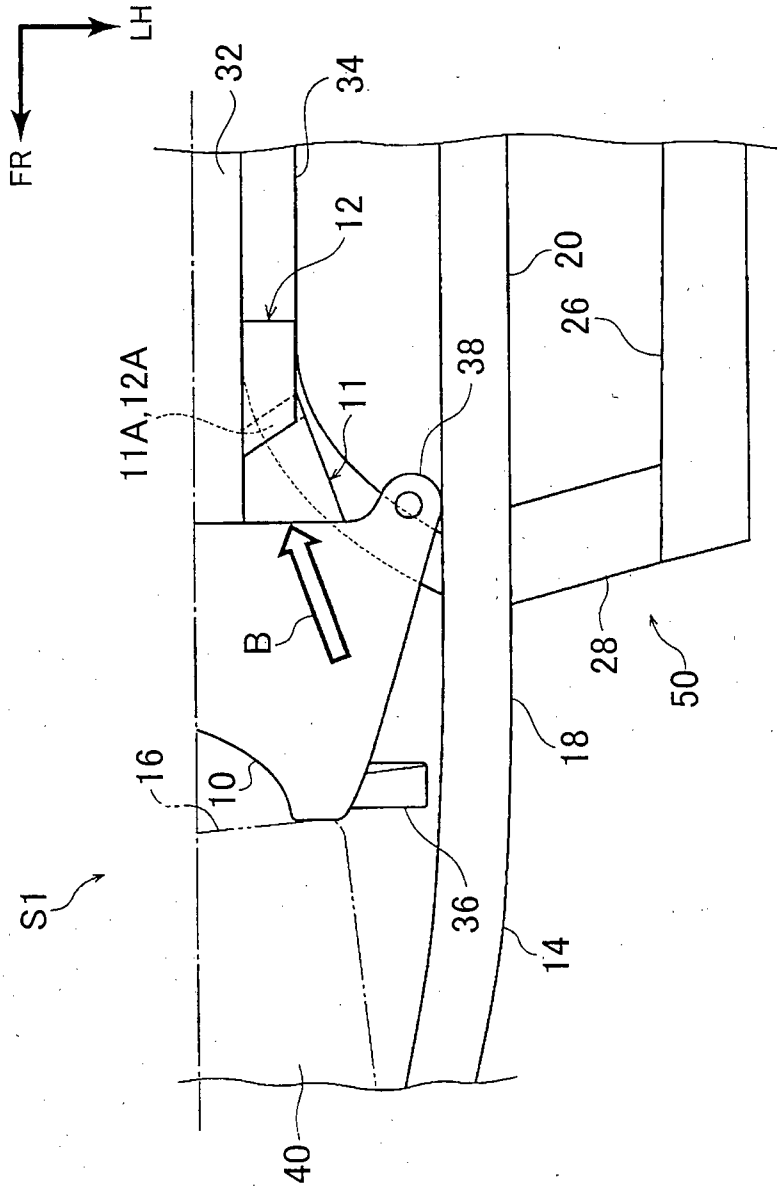

PCT/IB2014/001903

FIG. 7A

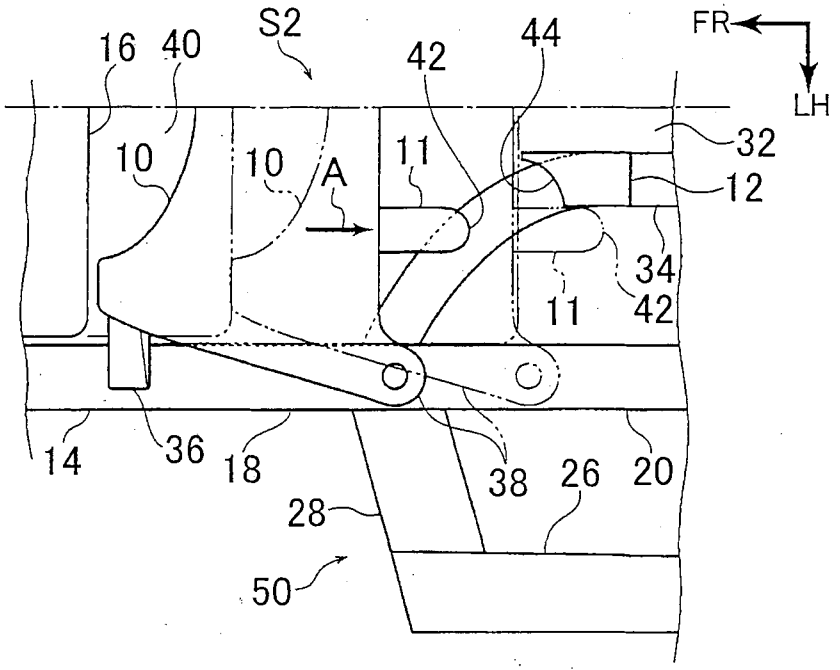

FIG. 7B

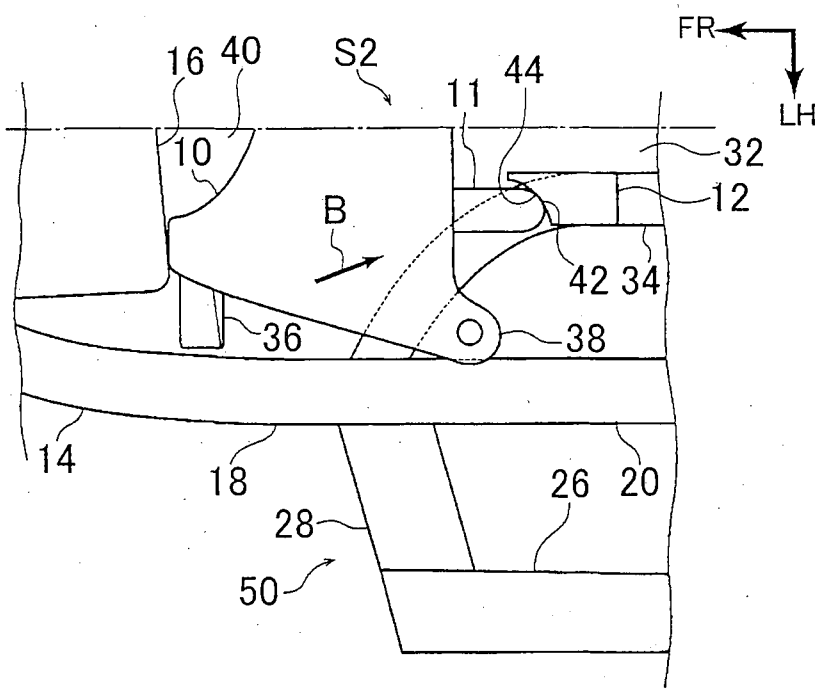

PCT/IB2014/001903

FIG. 8A

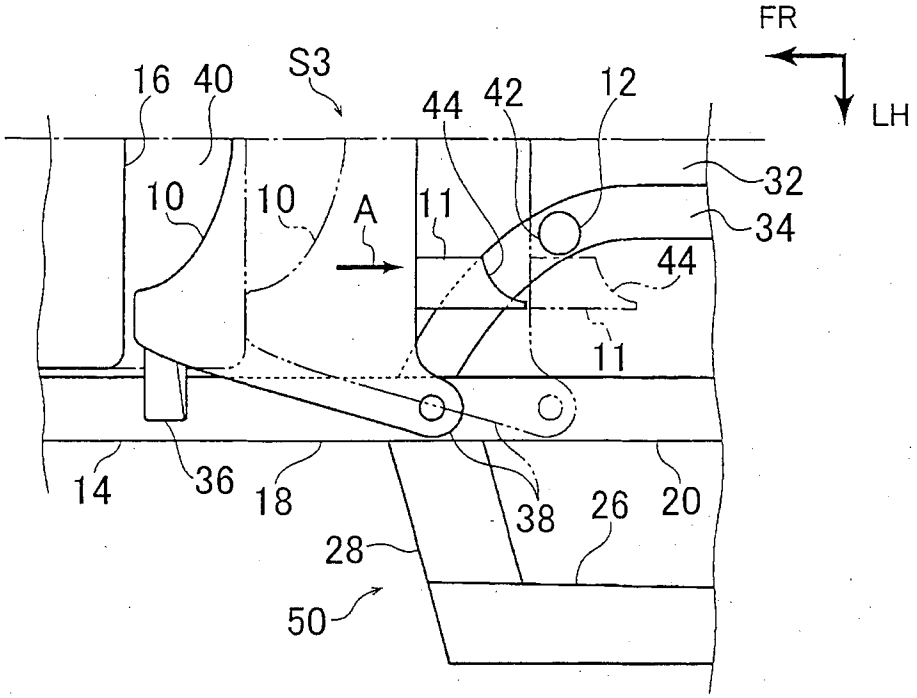

FIG. 8B

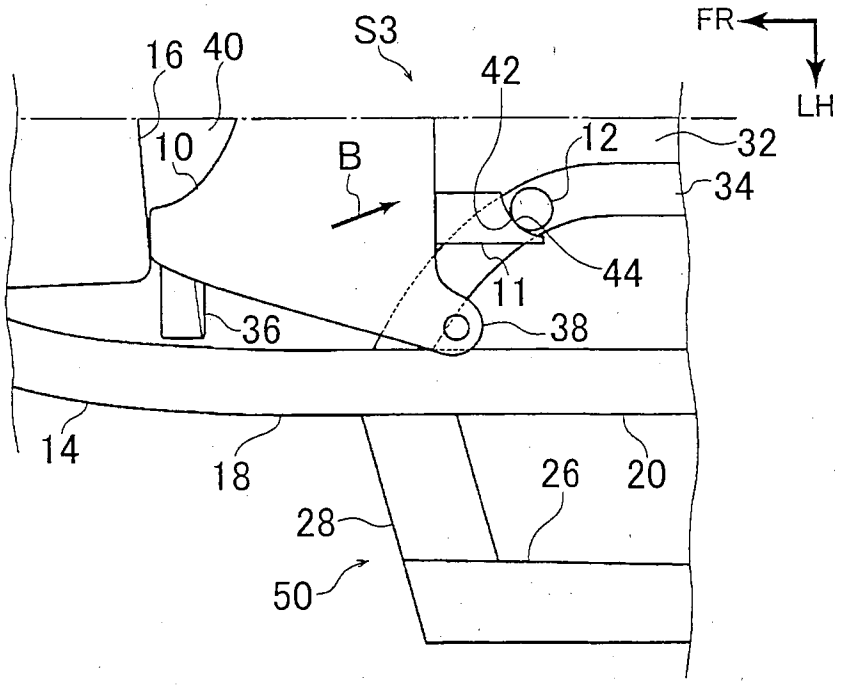

INTERNATIONAL SEARCH REPORT

International application No
PCT/IB2014/001903

A. CLASSIFICATION OF SUBJECT MATTER
INV. B62D21/15
ADD.

According to International Patent Classification (IPC) or to both national classification and IPC

B. FIELDS SEARCHED

Minimum documentation searched (classification system followed by classification symbols)
B62D B60R

Documentation searched other than minimum documentation to the extent that such documents are included in the fields searched

Electronic data base consulted during the international search (name of data base and, where practicable, search terms used)
EPO-Internal, WPI Data

C. DOCUMENTS CONSIDERED TO BE RELEVANT

Category*	Citation of document, with indication, where appropriate, of the relevant passages	Relevant to claim No.
A	DE 10 2012 004681 A1 (DAIMLER AG [DE]) 12 September 2013 (2013-09-12) paragraphs [0004] - [0006] paragraphs [0016] - [0033] figures -----	1-5
A	US 2013/147233 A1 (MIYASHITA TOSHIYA [JP]) 13 June 2013 (2013-06-13) paragraphs [0007] - [0010] paragraphs [0030] - [0049] figures -----	1-4

☐ Further documents are listed in the continuation of Box C.

☒ See patent family annex.

* Special categories of cited documents :

"A" document defining the general state of the art which is not considered to be of particular relevance

"E" earlier application or patent but published on or after the international filing date

"L" document which may throw doubts on priority claim(s) or which is cited to establish the publication date of another citation or other special reason (as specified)

"O" document referring to an oral disclosure, use, exhibition or other means

"P" document published prior to the international filing date but later than the priority date claimed

"T" later document published after the international filing date or priority date and not in conflict with the application but cited to understand the principle or theory underlying the invention

"X" document of particular relevance; the claimed invention cannot be considered novel or cannot be considered to involve an inventive step when the document is taken alone

"Y" document of particular relevance; the claimed invention cannot be considered to involve an inventive step when the document is combined with one or more other such documents, such combination being obvious to a person skilled in the art

"&" document member of the same patent family

Date of the actual completion of the international search	Date of mailing of the international search report
20 January 2015	28/01/2015

Name and mailing address of the ISA/	Authorized officer
European Patent Office, P.B. 5818 Patentlaan 2 NL - 2280 HV Rijswijk Tel. (+31-70) 340-2040, Fax: (+31-70) 340-3016	Ionescu, Bogdan

1

INTERNATIONAL SEARCH REPORT

Information on patent family members

International application No
PCT/IB2014/001903

Patent document cited in search report	Publication date	Patent family member(s)	Publication date
DE 102012004681 A1	12-09-2013	NONE	
US 2013147233 A1	13-06-2013	CN 103158649 A	19-06-2013
		JP 2013123957 A	24-06-2013
		US 2013147233 A1	13-06-2013
		US 2014327254 A1	06-11-2014