Oct. 3, 1939. W. STAVELEY 2,174,953

REVERSING CAR-SEAT BASE

Filed April 8, 1938 2 Sheets-Sheet 1

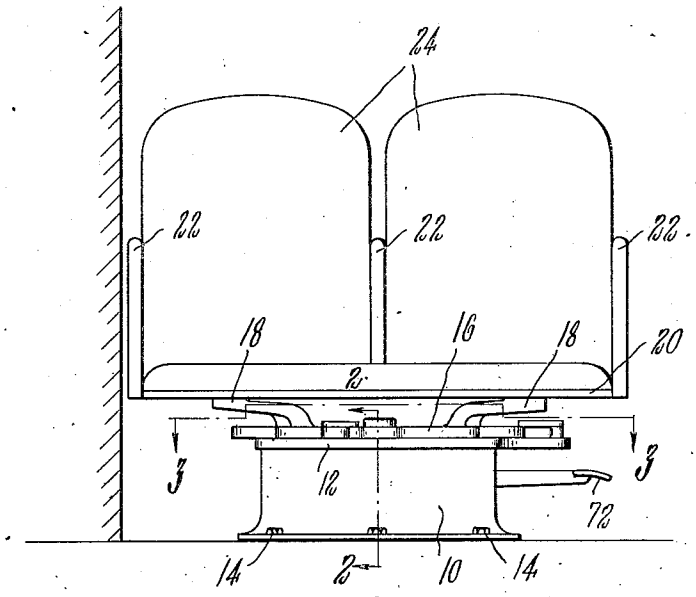

Fig. 1.

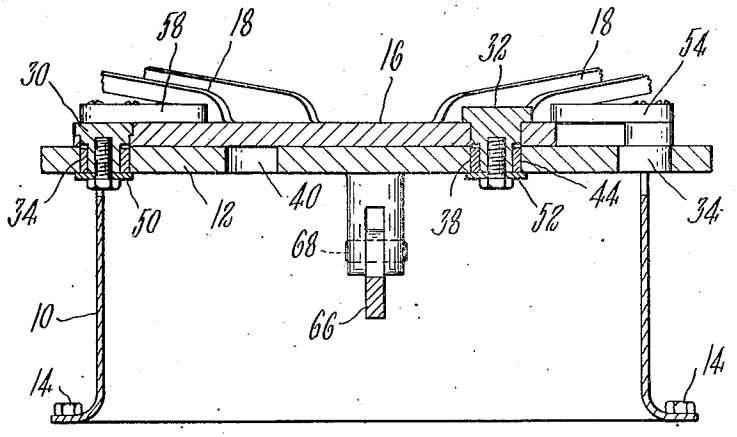

Fig. 2.

Inventor
Wilford Staveley
by Wright, Brown, Quinby & May
Attys.

Oct. 3, 1939. W. STAVELEY 2,174,953

REVERSING CAR-SEAT BASE

Filed April 8, 1938 2 Sheets-Sheet 2

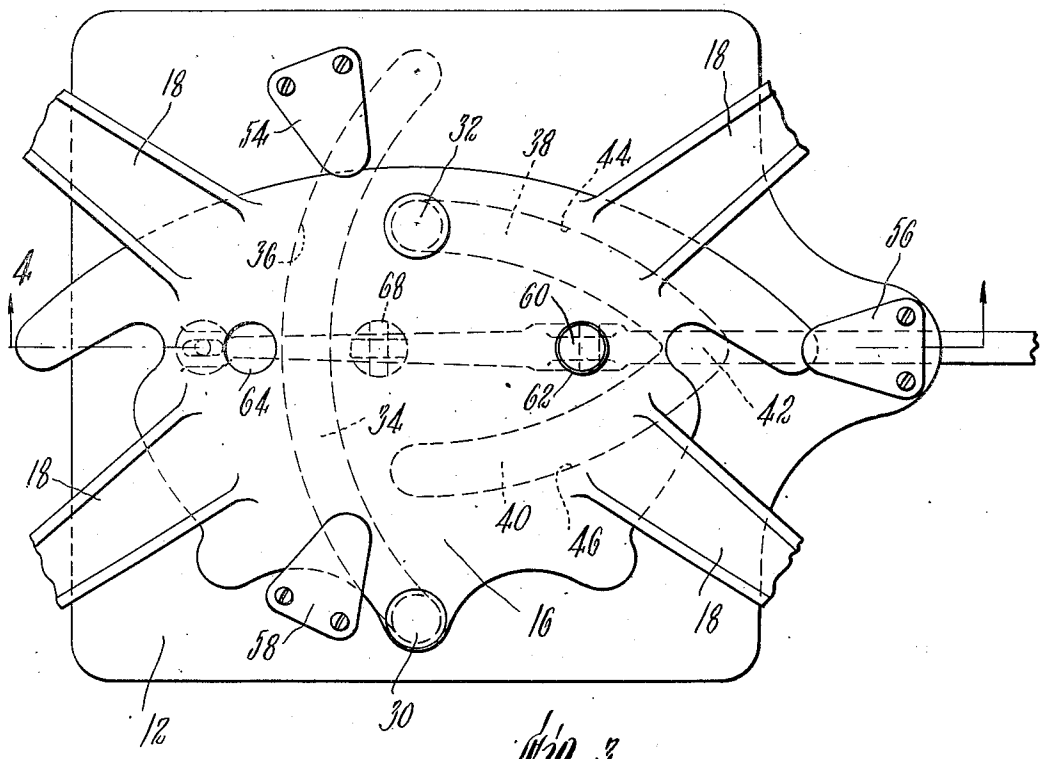

Fig. 3.

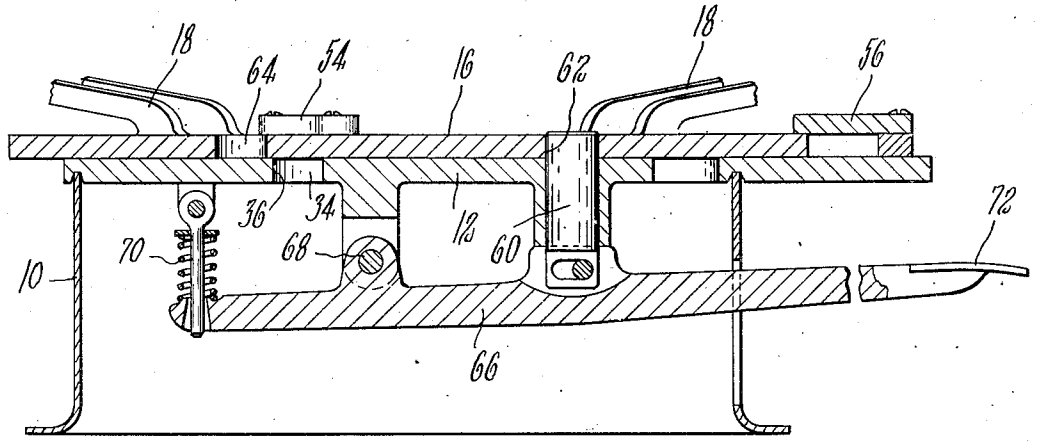

Fig. 4.

Inventor
Wilfred Staveley
by Wright, Brown, Quinby & May
Attys.

Patented Oct. 3, 1939

2,174,953

UNITED STATES PATENT OFFICE

2,174,953

REVERSING CAR-SEAT BASE

Wilford Staveley, Gardner, Mass., assignor to Heywood-Wakefield Company, Gardner, Mass., a corporation of Massachusetts

Application April 8, 1938, Serial No. 200,823

2 Claims. (Cl. 155—96)

This invention relates to reversing car-seat bases of the type which permits a vehicle seat carriage to turn about a vertical axis, the carriage being guided during the turning movement so that this axis shifts away from the vehicle wall during the initial portion of the reversing movement and shifts back toward the wall during the final portion of the reversing movement.

The object of structures of this kind is to enable the corners of the seat to clear the wall and to clear the backs of adjacent seats during the turning movement. Such mechanism makes it possible to mount the chair closer to the wall than would be possible if the chair were to turn about a stationary axis. Thus maximum aisle space is obtained and minimum spacing between center lines of successive seats is made possible.

According to the present invention, guiding means consisting essentially of three arcuate cam edges and two cam followers is provided to guide and control the reversing movement of the seat under its pedestal. The cam followers are preferably mounted on the seat carriage and project downwardly therefrom for engagement with the cam edges which are on top of the stationary pedestal. If desired, however, the cam followers may be mounted on the pedestal and the cam edges may be on the carriage. The cam edges and cam followers are so arranged that the former are always in contact with the latter.

Further characteristics of the invention are more specifically described hereinafter and are illustrated on the drawings of which

Figure 1 is a front elevation of a vehicle seat in the base of which the invention is embodied.

Figure 2 is a sectional view on the line 2—2 of Figure 1.

Figure 3 is a sectional view on the line 3—3 of Figure 1.

Figure 4 is a sectional view on the line 4—4 of Figure 3.

The chair structure illustrated in Figure 1 includes a stationary pedestal 10 which has a flat top 12 and which is preferably secured to the floor of a vehicle as by suitable bolts 14. Slidable on the upper surface of the flat top 12 is a seat carriage which, as indicated in the drawings, may include a plate or carriage member 16 slidable upon a flat top 12 of the pedestal. A number of spider arms 18 are secured to the plate 16 to support a seat frame 20. The seat may be provided with arm rests 22, one or more back members 24, and any other accessories desired.

The seat is adapted to be reversed through an angle of 180° so that it can face in opposite directions. The reversing movement of the seat is controlled by guiding means consisting of a pair of cam followers 30 and 32 which ride in cam slots such as are illustrated in Figure 3, these cam slots being cut or otherwise formed in the top 12 of the pedestal. The cam follower 30 rides in an arcuate slot 34 and is guided therein by contact with the concave arcuate cam edge 36 which is circular from end to end. The cam follower 32 rides in a pair of arcuate slots 38 and 40 which intersect at 42. This cam follower is guided by the control cam edges 44 and 46 and is always in contact with one or both of these cam edges. Figure 3 shows the cam follower 30 at one extreme end of the cam edge 36. When the cam follower 30 is in this position, its center is the center of curvature of the cam edge 44. Likewise, when the cam follower 30 is at the other extreme end of the cam edge 36, its center is the center of curvature of the cam edge 46. Thus, when the cam follower 30 is in the position shown in Figure 3, the cam follower 32 as it travels along the cam edge 44 must remain substantially in contact therewith, and when the cam follower 30 is at the other extreme end of the cam slot 34, the cam follower 32 can travel along the cam edge 46 but must remain substantially in contact therewith. If the cam follower 32 is moved to the intersection 42, it is then in contact with both cam edges 44 and 46, and when in this position its center is the center of curvature of the cam edge 36. Thus, when the cam follower 32 is at the intersection 42, the cam follower 30 can move along the slot 34 but is always substantially in contact with the cam edge 36. Thus it is evident that the essential portions of the guiding means are the concave arcuate cam edges 36, 44 and 46 and the two cam followers 30 and 32 which are at all times in contact with these cam edges. As is evident from Figure 3, the cam edges are symmetrical with respect to the end-to-end center line of the seat, and the four points defined by the centers of the cam followers 30 and 32 when at the extreme ends of the cam edges lie in the front-to-rear center line of the seat.

When a seat is moved from the position indicated in Figure 3 to its reversed position, the cam follower 32 travels along the edge 44 until it reaches the intersection point 42, the cam follower 30 remaining stationary during this interval. When the cam follower 32 reaches the intersection 42 so that it is in contact with both of the cam edges 44 and 46, it then remains stationary while the cam follower 30 travels along the cam edge 36 to its other extreme edge.

Thereupon, the cam follower 30 remains stationary while the cam follower 32 travels along the cam edge 46 to the extreme edge thereof, this resulting in the completion of the reversing movement. When the seat is turned back to its original position, these movements take place in the reverse order.

The cam followers 30 and 32 are preferably in the form of, or are made to include, rollers to minimize friction with the cam edges. As shown, the cam followers are provided with flanges 50 and 52 portions of which engage the under face of the top 12 so as to retain the seat carriage on the top. In order to hold the seat carriage down more securely when in either of its positions for use, a number of hold-down members 54, 56 and 58 may be mounted upon the pedestal to overhang portions of the carriage member 16. These hold-down members are preferably so distributed as to engage widely spaced portions of the carriage member 16 so as to hold the carriage and seat against any wabbling movement when the seat is in either of its positions for use.

The seat may be locked in position by any suitable mechanism such, for example, as a plunger 60 vertically slidable upward through the pedestal top 12 to engage in one or the other of a pair of apertures 62 and 64 in the carriage member 16. As indicated in Figure 4, the plunger 60 is pivotally connected to a lever 66, the latter being rockably mounted as at 68. A compression spring 70 tends to rock the lever 66 so as to move the plunger 60 into locking position. The lever 66 may be rocked to release the seat by stepping on a suitable treadle 72 which projects toward the aisles from the pedestal 10. This releases the seat which may then be swung around to its reversed position for use.

Various modifications and changes may be made in the particular embodiment of the invention herein shown and described, without departing from the spirit or scope thereof as defined in the following claims.

I claim:

1. A reversible car-seat base, comprising a pedestal, a seat carriage horizontally slidable on said pedestal, and means for guiding the reversing movements of said carriage, said guiding means consisting of three arcuate cam edges on said pedestal and a pair of cam followers projecting down from said carriage to ride along said cam edges from end to end, the center of curvature of each said cam edge being the center of one of said cam followers when it is at an extreme end of one of the other two cam edges.

2. A reversible car-seat base, comprising a pedestal having a horizontal top, a seat carriage having a member slidable on said top, and means for guiding the reversing movements of said carriage, said guiding means comprising a cam edge on said top in the shape of a concave circular arc, a cam follower projecting down from said carriage member to engage said cam edge and slidable along said edge from end to end thereof, a pair of cam edges on said top in the shape of intersecting concave circular arcs, and a second cam follower projecting from said carriage member and constantly engaging one or both of said pair of cam edges, the centers of curvature of said pair of cam edges being the center of said first-mentioned cam follower when at the extreme ends of the first-mentioned cam edge, the center of curvature of the first-mentioned cam edge being the center of the second cam follower when in engagement with both of said pair of cam edges.

WILFORD STAVELEY.