(19) DANMARK

(10) DK/EP 2489792 T3

(12) Oversættelse af europæisk patentskrift

Patent- og Varemærkestyrelsen

(51) Int.Cl.: *E 03 C 1/04 (2006.01)* *F 16 K 11/078 (2006.01)*

(45) Oversættelsen bekendtgjort den: **2015-11-23**

(80) Dato for Den Europæiske Patentmyndigheds bekendtgørelse om meddelelse af patentet: **2015-09-16**

(86) Europæisk ansøgning nr.: **11009578.3**

(86) Europæisk indleveringsdag: **2011-12-05**

(87) Den europæiske ansøgnings publiceringsdag: **2012-08-22**

(30) Prioritet: **2011-02-16 CH 2722011**

(84) Designerede stater: **AL AT BE BG CH CY CZ DE DK EE ES FI FR GB GR HR HU IE IS IT LI LT LU LV MC MK MT NL NO PL PT RO RS SE SI SK SM TR**

(73) Patenthaver: **Franke Water Systems AG, Hauptstrasse 57, 5726 Unterkulm, Schweiz**

(72) Opfinder: **Leutwyler, André, Spitalstrasse 15B, 5734 Reinach, Schweiz**
Gautschi, Christian, Alzbachmatt 2, 5734 Reinach, Schweiz

(74) Fuldmægtig i Danmark: **PATRADE A/S, Fredens Torv 3A, 8000 Århus C, Danmark**

(54) Benævnelse: **Sanitært armatur med dækelement til beskyttelse af en styrepatron**

(56) Fremdragne publikationer:
EP-A2- 0 982 441
EP-A2- 1 219 878
DE-A1- 3 120 171
DE-A1- 10 038 391
DE-A1-102005 040 160

Sanitary fitting having a covering element for protecting a control cartridge

The present invention relates to a sanitary fitting according to the preamble of claim 1.

The closest state of the art for the invention is document EP 0 982 441 A1. It discloses a sanitary single-handle faucet comprising a fitting body, which has a receiving opening open towards its upper front side. A control unit is arranged in the receiving opening of the fitting body and has an adjusting lever projecting upward. A mixer lever is arranged above the upper front side of the fitting body, which has a fastening portion connected with the adjusting lever. A rigid protective cap arranged under the mixer lever covers the receiving opening of the fitting body upwards. The rigid protective cap has an opening through which the fastening portion of the mixer lever and/ or the adjusting lever of the control unit extends. The opening of the rigid protective cap is reduced by a flexible cuff. The latter has a smaller opening, through which the fastening portion of the mixer lever and/ or the adjusting lever of the control unit extends.

Document EP 1 219 878 A2 discloses a lever tap, comprising a stationary body with a protective cap at the end of the body, as well as a lever. The lever is pivotable relative to an articulation and rotatable about its axis. The lever is provided with a handle and has a co-movable packing made of an elastic rubber or plastic. The protective cap of the body has a spherically curved surface and the lever has a dome covering the end of the body, wherein a bottom rim of the dome traces along the curved surface of the protective cap during maneuvering of the lever and wherein the annular collar of the packing is adapted to trace along the curved surface of the protective cap for sealing a clearance between the body end and the lever.

A further sanitary fitting is known from the document EP 0 061 562 B1. The sanitary fitting has a control cartridge which is arranged in an end region of a fitting housing and defines a longitudinal axis, and is covered by a fitting cap at an end, on this side, of the fitting housing. The fitting cap has a through-passage, through which an actuating shaft, as part of the control cartridge, is connected to an actuating lever which is arranged outside the fitting cap, said actuating shaft being pivotable about a pivot axis that runs at right angles to the longitudinal axis.

A problem with sanitary fittings of this kind is the poorly protected ingress of contaminants into the interior of the control cartridge, since the through-passage in the fitting cap, together with a necessary gap between the fitting cap and the actuating lever, allows ingress into the interior of the control cartridge. Although the necessary gap prevents the fitting cap from being scratched when the actuating lever is actuated into an open or closed position of the control cartridge, it is possible for contaminants to penetrate into the interior of the control cartridge through the necessary gap and the through-passage in the fitting cap. In particular at highly frequented locations, such as in public buildings or in industry, for example, strong cleaning agents are usually used for cleaning sanitary fittings. These strong cleaning agents can penetrate into the control cartridge and cause damage there.

It is therefore an object of the present invention to develop a sanitary fitting of the generic type such that operational reliability is ensured even when strong cleaning agents are used for cleaning.

This object is achieved by way of a sanitary fitting which has the features of claim 1.

The sanitary fitting according to claim 1 has a control cartridge which is arranged in an end region of a fitting housing and defines a longitudinal axis. The control cartridge and an end, on this side, of the fitting housing are covered by a fitting cap. The fitting cap has a through-passage, through which an actuating shaft of the control cartridge is connected to an actuating lever which is arranged outside the fitting cap, said actuating shaft being pivotable about a pivot axis that runs at right angles to the longitudinal axis. A deformable, annular covering element according to the invention is fastened by way of a first rim, facing the control cartridge, to a support ring arranged on the control cartridge, and engages in a sealing manner by way of a second rim around the actuating shaft, or a connecting element seated thereon. By means of the covering element, contaminants are prevented from penetrating into the interior of the control cartridge.

Preferably, the deformable, annular covering element is rubber-elastic, resistant to cleaning agent and produced from a crosslinked thermoplastic elastomer based on olefin (TPE-V), also known as TPV, and is predominantly a composite composed of polypropylene (PP) and ethylene-propylene-diene rubber (EPDM). Furthermore, the covering element is preferably formed in a hood-like manner. In

addition, the covering element is formed preferably as a thin, flexible and tear-resistant membrane.

In a further embodiment, the control cartridge has at least one retaining element, preferably a spring finger, which projects in the direction of the fitting cap and by means of which the support ring is retained.

Easy mounting of the support ring is possible by means of the spring finger. In order to fasten the support ring, it is, of course, also conceivable to use a plurality of spring fingers, which hold the support ring in the desired position.

In a further embodiment, the actuating shaft is rotatable about the longitudinal axis.

This allows a combination of a rotary movement and a pivoting movement of the actuating shaft. Usually, the temperature of the water emerging from the sanitary fitting is set by way of the rotary movement of the actuating shaft and usually the water throughflow is controlled by the pivoting movement of the actuating shaft.

In a further embodiment, the retaining element and the support ring are rotatable about the longitudinal axis together with the actuating shaft.

This has the advantage that twisting of the deformable, annular cover element in the installed state is prevented.

In a further embodiment, an annular bead which projects in the direction of the fitting cap is integrally formed on the support ring.

This makes it easier to fasten the deformable, annular covering element on the support ring and also confers increased stability on the latter.

In a further embodiment, the annular bead has a circumferential annular groove, into which the first rim of the covering element engages.

This provides a defined position for the first rim of the covering element.

In a further embodiment, the annular groove is open radially on the outside and preferably the first rim of the covering element is in the form of a circumferential retaining bead.

This has the advantage that the first rim of the covering element is retained securely in the annular groove and the inherent elasticity of the circumferential retaining bead results in additional self-securing.

In a further embodiment, the fitting cap is fastened to the support ring.

This can take place for example by simple mounting. It is particularly advantageous for the support ring to be rotatable about the longitudinal axis together with the actuating shaft, since, in this simple manner, the fitting cap also automatically corotates.

In a further embodiment, the support ring has an external lateral surface having at least one holding recess, into which a retaining lug of the fitting cap engages. Preferably the retaining lug is integrally formed on a, for example lug-shaped, fastening element of the fitting cap.

This makes it easier to fasten the fitting cap on the support ring. Preferably, the retaining lug is formed in an identical, but opposite, way to the holding recess. This ensures that twisting is prevented between the support ring and the fitting cap. If necessary, the fitting cap can be fastened only in one predetermined direction on the support ring. A corresponding arrangement of the holding recess on the support ring can ensure that the mounting of the fitting cap on the support ring allows only one defined mounting direction.

In a further embodiment, a slot through the support ring, said slot extending at least approximately in the circumferential direction, is assigned to the holding recess, radially on the inside with regard to the latter, in order to form a leaf spring.

This makes it possible for the holding recess to yield and snap in automatically during the mounting of the fitting cap. Of course, mounting in the opposite direction is also possible, by the retaining lug being integrally formed on the support ring and the lug-shaped fastening element having the identical but opposite holding recess. The spring function could also be taken over by the fastening element.

In a further embodiment, the second rim of the covering element is in the form of a circumferential sealing bead.

A particular advantage of the material of the covering element is the rubber-elastic property, so that the sealing bead contracts again on account of pulling forces and can fit closely in a correspondingly sealing manner. Of course, it is also possible to provide a groove for holding the sealing bead, it being possible for said groove to be present on the connecting element or on the actuating shaft.

In a further embodiment, a connecting element is seated on the actuating shaft, the actuating lever being fastened to and the second rim of the covering element resting in a sealing manner against said connecting element.

Gentle and particularly easy mounting of the actuating lever is possible by means of the connecting element. It is also conceivable for the connecting element to be arranged directly on the actuating lever or to be connected integrally thereto.

In a further embodiment, the support ring has on its radially inner rim an annular part which projects on one side toward the fitting cap and on the other side toward the control cartridge.

This allows the actuating shaft to engage through the annular part in the direction of the fitting cap and allows the pivoting movement for opening and closing the control cartridge. Furthermore, the annular part can be fastened to the control cartridge. That part of the annular part that is directed toward the control cartridge has a sealing action, and so contaminants are additionally prevented from penetrating into the interior of the control cartridge.

In a further embodiment, a spring lug is integrally formed at the free end of the spring finger and interacts with that end of the annular part that faces the fitting cap, in order to retain the annular part in abutment against the control cartridge.

This ensures that the annular part rests against the control cartridge in a sealing manner.

Further advantages of the present invention can be gathered from the following description of an exemplary embodiment which is explained by way of the drawing, in which, in a purely schematic manner:

Figure 1 shows a partial longitudinal section through a part of a sanitary fitting according to the invention, illustrating a view of a control cartridge in the open position; and

Figure 2 shows, in a similar illustration to figure 1, a longitudinal section through the housing of the sanitary fitting and a view of the control cartridge in the closed position.

The sanitary fitting 10 shown in figure 1 has, in an end region 12 of a fitting housing 14, a control cartridge 16 (to be seen only in figure 2, for which reason the reference line is dashed in figure 1), which defines a longitudinal axis A, and an end 18, on this side, of the fitting housing 14 is covered by a fitting cap 20.

The fitting cap 20, which in the present case is in one piece, has a cylindrical part 22 and a spherical-cap-shaped part 24.

The cylindrical part 22 of the fitting cap 20 is separated from the end 18, on this side, of the fitting housing 14 via a thin gap 26. A support ring 28 is arranged between the fitting housing 14 and the fitting cap 20 and prevents the lateral penetration of contaminants through the thin gap 26. The external surface of the cylindrical part 22 is aligned with the external surface of the fitting housing 14 at the end 18.

The spherical-cap-shaped part 24 of the fitting cap 20 has a slot-like through-passage 30. In the exemplary embodiment show, a connecting element 32 engages through the slot-like through-passage 30 and the connecting element 32 is seated firmly on an actuating shaft 34 of the control cartridge 16, with the actuating shaft 34 being pivotable about a pivot axis B that extends at right angles to the longitudinal axis A. Outside the fitting cap 20, an actuating lever 36 is fastened to the connecting element 32 in a known manner by means of a grub screw.

In the open position of the control cartridge 16 according to figure 1, the actuating lever 36 has been pivoted up and water flows in a known manner through the control cartridge 16 at a defined water throughflow.

In the closed position of the control cartridge 16 according to figure 2, the actuating lever 36 has been pivoted down and the water throughflow through the control cartridge 16 has been stopped.

Basically, the slot-like through-passage 30 through the fitting cap 20 has to allow the actuating shaft 34 to perform its pivoting movement fully, so that it is possible to open and close the control cartridge 16 satisfactorily by means of the actuating lever 36 outside the fitting cap 20.

Although the actuating lever 36 completely covers the through-passage 30 through the fitting cap 20 in every pivoting position, it is possible for contaminants to be able to pass between the fitting cap 20 and the actuating lever 36 through a necessary gap 38 and into the interior of the control cartridge 16. The necessary gap 38 prevents the fitting cap 20 from being scratched during the pivoting movement of the actuating lever 36 in use.

The control cartridge 16, which is arranged in an interior space 39 of the fitting housing 14, is installed in a known manner. In the present case, the fitting housing 14, as illustrated in detail in figure 2, consists of an inner housing 14' and an outer housing 14''. The inner housing 14' is connected by means of a thread 17 to a ring nut 40 which holds the control cartridge 16 in position in a known manner in the interior space 39 of the fitting housing 14. Arranged between the ring nut 40 and the cylindrical part 22 of the fitting cap 20 and also the outer housing 14'' is the support ring 28, as explained above. Arranged between the inner housing 14' and the outer housing 14'' is a sliding ring 29 which rests against an O-ring 31. The O-ring 31 in turn rests against a radially inner shoulder 33 of the outer housing 14'' and thus additionally protects the interior space 39 of the fitting housing 14 against contaminants. The sliding ring 29 centers the outer housing 14'', which is rotatable on the fixed inner housing 14' about the longitudinal axis A.

Arranged on the control cartridge 16 in the direction of the fitting cap 20 is a ring 42 (shown with dashed lines in figure 2) which corotates with the actuating shaft 34. The corotating ring 42 of the control cartridge 16 has in the present case four retaining elements 44, which project in the direction of the fitting cap 20, are in the form of spring fingers 44' and are arranged parallel to the longitudinal axis A.

A disk-shaped support ring 46 is arranged on the corotating ring 42 of the control cartridge 16 in an interior space 48 delimited by the fitting cap 20 and has on its radially inner rim an annular part 50 which projects on one side in the direction of the fitting cap 20 and on the other side in the direction of the control cartridge 16. In addition, the annular part 50 allows the actuating shaft 34 of the control cartridge 16 to engage through and pivot.

The spring fingers 44' are arranged firmly on the corotating ring 42 of the control cartridge 16 and engage through the annular part 50 of the support ring 46 in the direction of the fitting cap 20. Integrally formed at the free end of the spring fingers 44' is a respective spring lug 52 which interacts with that end of the annular part 50 which faces the fitting cap 20, in order to retain the annular part 50 in a sealing manner against the corotating ring 42 of the control cartridge 16.

A circumferential annular bead 54 is integrally formed on the disk-shaped support ring 46 in a manner projecting in the direction of the fitting cap 20. The circumferential annular bead 54 has a circumferential annular groove 56 which is open radially toward the outside.

A deformable, annular covering element 58 is preferably rubber elastic, hood-like and in the form of a thin, flexible and tear-resistant membrane. The covering element 58 has a first rim 60, which is formed in a manner facing the control cartridge 16 and preferably as a retaining bead 60', and a radially inner second rim 62, which is formed preferably as a sealing bead 62'. On account of the inherent elasticity of the rubber-elastic material, which is produced preferably from TPE-V, or TPV, the retaining bead 60' of the first rim 60 of the covering element 58 is retained automatically in the circumferential annular groove 56 of the annular bead 54 of the support ring 46 and the circumferential sealing bead 62' of the second rim 62 of the covering element 58 contracts and fits closely in a correspondingly circumferential and a sealing manner against the connecting element 32.

Of course, it is also conceivable for the circumferential sealing bead 62' of the second rim 62 of the covering element 58 itself to rest against the actuating shaft 34 or for the connecting element 32 to have a circumferential groove (not shown), in which the circumferential sealing bead 62' engages.

As can be seen from figures 1 and 2, the deformable, annular covering element 58 is installed in an untensioned manner upon each pivoting movement of the actuating shaft 34. This has the advantage that the covering element 58 is never under tension and thus there is also no risk of tearing or of retention being lost.

In the exemplary embodiment shown, the fitting cap 20 is fastened to the support ring 46. To this end, the support ring 46 has a radially outer lateral surface 64 having at least one holding recess 66, preferably six recesses. Preferably, two holding recesses 66, 66' are arranged in a diametrically opposed manner. However, it is also conceivable to provide more than two holding recesses 66, 66', 66'' (third not shown) so that an unambiguous assignment and mounting direction is possible during the fastening of the fitting cap 20 on the support ring 46.

A retaining lug 68 of the fitting cap 20, said retaining lug 68 pointing radially inward, engages in the holding recess 66 of the support ring 46 and is integrally formed on a fastening element 70, which is configured here as a fastening lug 70', of the fitting cap 20.

A slot 72 through the support ring 46, said (length-limited) slot extending at least approximately in the circumferential direction, is assigned to the holding recess 66 of the support ring 46, radially on the inside with regard to said holding recess 66, so that that part of the support ring 46 which supports the holding recess 66 forms a leaf spring 74. Correspondingly, it is very easy to mount the fitting cap 20 on the support ring 46, since when the retaining lug 68 of the fitting cap 20 interacts with the holding recess 66 of the support ring 46, the leaf spring 74 yields radially inward, and the restoring force of the leaf spring 74 leads to snap closure between the fitting cap 20 and the support ring 46.

It is also possible to arrange the support ring 46 firmly on the control cartridge 16. This is the case in particular when the actuating shaft 34 is only pivotable, but not rotatable.

Patentkrav

1. Sanitært armatur omfattende et armaturhus (14), en styrepatron (16), som er arrangeret i et endeområde (12) af et armaturhus (14) og definerer en længdeakse (A), samt en armaturkappe (20), som dækker en ende (18) på denne side af armaturhuset (14), hvor armaturhætten (20) har en gennemgående passage (30), gennem hvilken et betjeningsskaft (34) af styrepatronen (16) er forbundet med en betjeningsarm (36), som er arrangeret uden for armaturhætten (20), hvilket betjeningsskaft (34) kan svinges om en svingaksen (B), der strækker sig retvinklet i forhold til længdeaksen (A), hvilket betjeningsskaft (34) kan svinges om længdeaksen (A), og hvor der er tilvejebragt et deformerbart, ringformet dækelement (58), som er fastgjort via en første rand (60), der vender mod styrepatronen (16), til en bærering (46) arrangeret på styrepatronen (16), og som på tætnende måde er i indgreb via en anden rand (62) omkring drivstangen (34) eller et forbindelseselement (32) siddende derpå, for at hindre forureninger i at trænge ind i styrepatronen (16), **kendetegnet ved, at** bæreringen (46) kan drejes om længdeaksen (A) sammen med drivstangen (34).

2. Sanitært armatur ifølge krav 1, **kendetegnet ved, at** styrepatronen har mindst et holdeelement (44) til at holde støtteringen (46), fortrinsvis en fjederfinger (44'), der rager ud i retning af armaturkappen (20).

3. Sanitært armatur ifølge krav 2, **kendetegnet ved, at** holdeelementet (44) og bæreringen (46) kan rotere om længdeaksen (A) sammen med betjeningsskaftet (34).

4. Sanitært armatur ifølge et af krav 1 til 3, **kendetegnet ved, at** en ringvulst (54) udragende i armaturkappens (20) retning er udformet på bæreringen (46).

5. Sanitært armatur ifølge krav 4, **kendetegnet ved, at** ringvulsten (54) har en omløbende ringnot (56), i hvilken dækelementets (58) første rand (60) indgriber.

6. Sanitært armatur ifølge krav 5, **kendetegnet ved, at** ringnoten (56) er åben radielt på ydersiden, og at fortrinsvis den første rand (60) af dækelementet (58) er i form af en omløbende holdevulst (60').

7. Sanitært armatur ifølge et af krav 1 til 6, **kendetegnet ved, at** armaturhætten (20) er fastgjort til bæreringen (46).

8. Sanitært armatur ifølge et af krav 1 til 7, **kendetegnet ved, at** bæreringen har en udvendig kappeflade (64) med mindst en holdereces (66), i hvilken en holdenæse (68) af armaturkappen (20) går i indgreb, og at holdenæsen (68) fortrinsvis er udformet på et fastgørelseselement (70) af armaturkappen (20).

9. Sanitært armatur ifølge krav 8, **kendetegnet ved, at** en slids (72) gennem bæreringen (46), som strækker sig i det mindste tilnærmelsesvis i omkredsretningen, er tildelt holderecessen (66) radielt på indersiden af sidstnævnte for at danne en bladfjeder (74).

10. Sanitært armatur ifølge et af krav 1 til 9, **kendetegnet ved, at** dækelementets (58) anden rand (62) er i form af en omløbende tætningsvulst (62').

11. Sanitært armatur ifølge et af krav 1 til 10, **kendetegnet ved, at** der på betjeningsskaftet (34) sidder et forbindelseselement (32), på hvilket betjeningsarmen (36) er fastgjort og på hvilket dækelementets (58) anden rand (62) ligger an på tætnende måde.

12. Sanitært armatur ifølge et af krav 1 til 11, **kendetegnet ved, at** bæreringen (46) på sin radielt indre rand har en ringdel (50), som på en side rager ud mod armaturkappen (20) og på den anden side mod styrepatronen (16).

13. Sanitært armatur ifølge krav 2 og 12, **kendetegnet ved, at** der på den frie ende af fjederfingeren (44') er udformet en fjederende næse (52), som samvirker med den mod armaturkappen (20) vendte ende af ringdelen (50) for at holde ringdelen (50) mod styrepatronen (16).

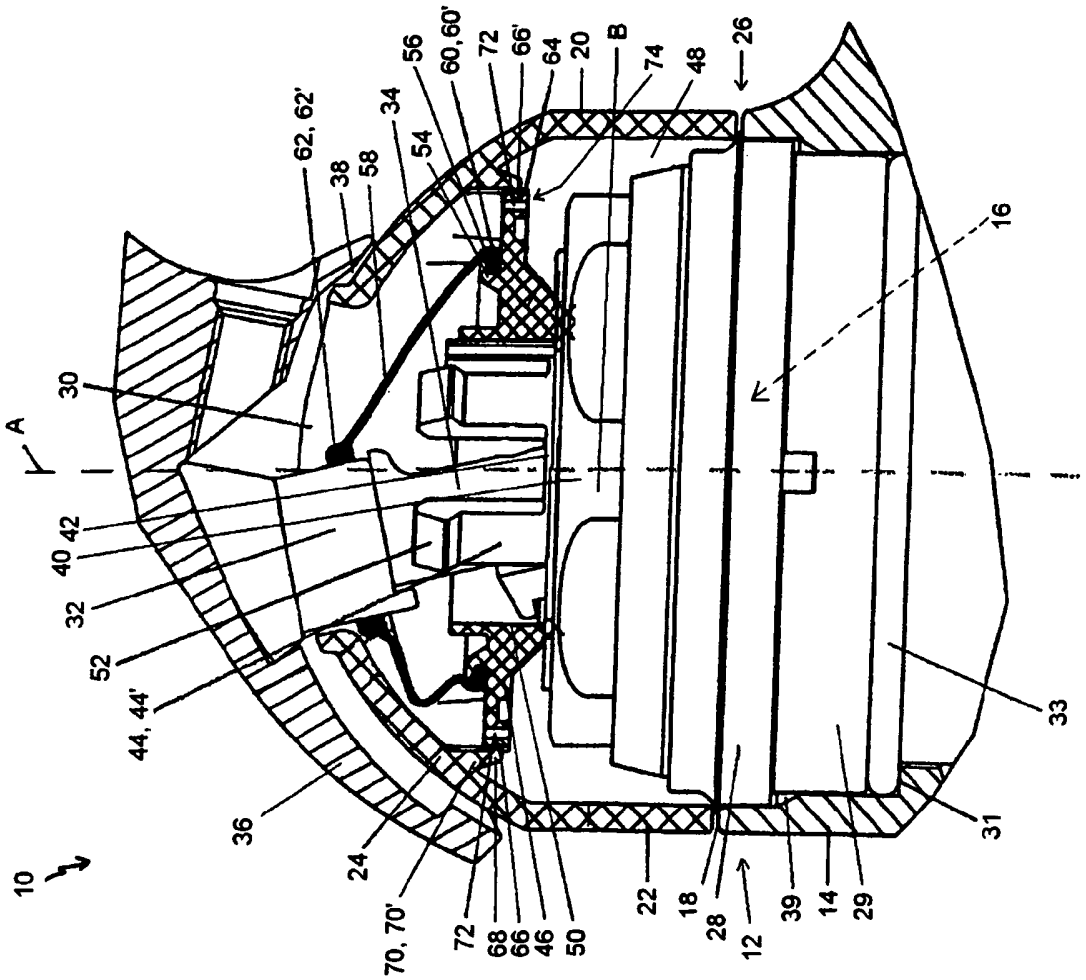
10
A
30
62, 62'
38
58
34
54
56
60, 60'
72
66'
64
20
B
74
48
26
16
42
40
32
52
44, 44'
36
24
70, 70'
72
68
66
46
50
22
18
28
12
39
14
29
31
33

Fig. 1

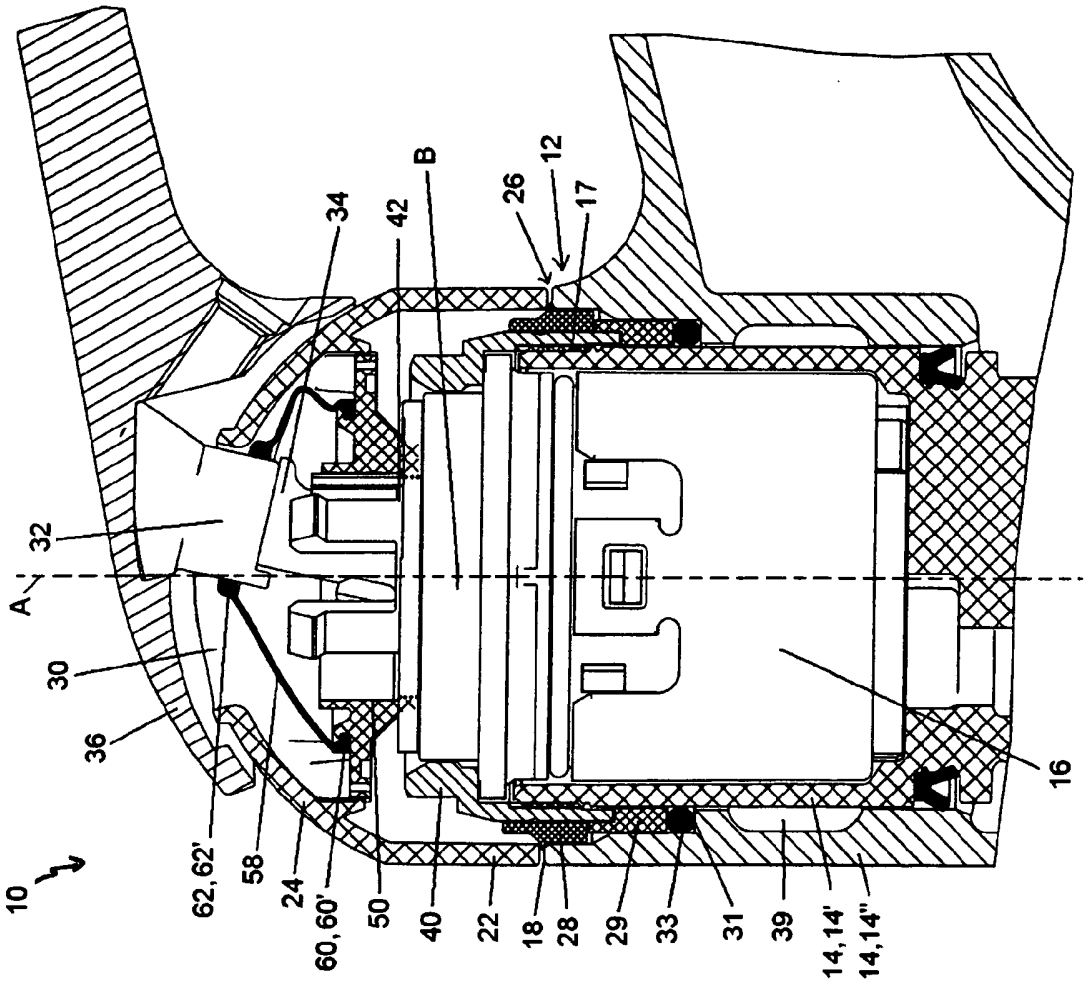
10
A
B
12
16
17
18
22
24
26
28
29
30
31
32
33
34
36
39
40
42
50
58
60, 60'
62, 62'
14, 14'
14, 14"

Fig. 2