(12) STANDARD PATENT (11) Application No. **AU 2019313421 B2**
(19) AUSTRALIAN PATENT OFFICE

(54) Title
Processes for producing optical effects layers

(51) International Patent Classification(s)
B05D 3/00 (2006.01) *B05D 3/02* (2006.01)
B05D 5/06 (2006.01) *B05D 3/06* (2006.01)

(21) Application No: **2019313421** (22) Date of Filing: **2019.06.18**

(87) WIPO No: **WO20/025218**

(30) Priority Data

(31) Number	(32) Date	(33) Country
18186285.5	**2018.07.30**	**EP**

(43) Publication Date: **2020.02.06**
(44) Accepted Journal Date: **2024.06.27**

(71) Applicant(s)
SICPA HOLDING SA

(72) Inventor(s)
NIKSERESHT GHANEPOUR, Neda;MUELLER, Edgar;SCHMID, Mathieu;DESPLAND, Claude-Alain

(74) Agent / Attorney
Spruson & Ferguson, GPO Box 3898, Sydney, NSW, 2001, AU

(56) Related Art
WO 2014/108404 A2
WO 2018/019594 A1

(12) INTERNATIONAL APPLICATION PUBLISHED UNDER THE PATENT COOPERATION TREATY (PCT)

(19) World Intellectual Property Organization
International Bureau

(43) International Publication Date
06 February 2020 (06.02.2020)

WIPO | PCT

(10) International Publication Number
WO 2020/025218 A1

(51) International Patent Classification:
B05D 3/00 (2006.01) *B05D 3/06* (2006.01)
B05D 5/06 (2006.01) *B05D 3/02* (2006.01)

(21) International Application Number:
PCT/EP2019/065982

(22) International Filing Date:
18 June 2019 (18.06.2019)

(25) Filing Language: English

(26) Publication Language: English

(30) Priority Data:
18186285.5 30 July 2018 (30.07.2018) EP

(71) Applicant: **SICPA HOLDING SA** [CH/CH]; Avenue de Florissant 41, 1008 Prilly (CH).

(72) Inventors: **NIKSERESHT GHANEPOUR, Neda**; Chemin des Champs Meunier 11B, 1052 Le Mont-sur-Lausanne (CH). **MUELLER, Edgar**; Chemin des Bouleaux 14, 1012 Lausanne (CH). **SCHMID, Mathieu**; Rue de l'Académie 3, 1005 Lausanne (CH). **DESPLAND, Claude-Alain**; Chemin de la Cure 8, 1008 Prilly (CH).

(74) Agent: **HOFFMANN EITLE PATENT- UND RECHTSANWÄLTE PARTMBB, ASSOCIATION NO. 151**; Arabellastraße 30, 81925 Munich (DE).

(81) Designated States *(unless otherwise indicated, for every kind of national protection available)*: AE, AG, AL, AM, AO, AT, AU, AZ, BA, BB, BG, BH, BN, BR, BW, BY, BZ, CA, CH, CL, CN, CO, CR, CU, CZ, DE, DJ, DK, DM, DO, DZ, EC, EE, EG, ES, FI, GB, GD, GE, GH, GM, GT, HN, HR, HU, ID, IL, IN, IR, IS, JO, JP, KE, KG, KH, KN, KP, KR, KW, KZ, LA, LC, LK, LR, LS, LU, LY, MA, MD, ME, MG, MK, MN, MW, MX, MY, MZ, NA, NG, NI, NO, NZ, OM, PA, PE, PG, PH, PL, PT, QA, RO, RS, RU, RW, SA, SC, SD, SE, SG, SK, SL, SM, ST, SV, SY, TH, TJ, TM, TN, TR, TT, TZ, UA, UG, US, UZ, VC, VN, ZA, ZM, ZW.

(84) Designated States *(unless otherwise indicated, for every kind of regional protection available)*: ARIPO (BW, GH, GM, KE, LR, LS, MW, MZ, NA, RW, SD, SL, ST, SZ, TZ, UG, ZM, ZW), Eurasian (AM, AZ, BY, KG, KZ, RU, TJ, TM), European (AL, AT, BE, BG, CH, CY, CZ, DE, DK, EE, ES, FI, FR, GB, GR, HR, HU, IE, IS, IT, LT, LU, LV, MC, MK, MT, NL, NO, PL, PT, RO, RS, SE, SI, SK, SM, TR), OAPI (BF, BJ, CF, CG, CI, CM, GA, GN, GQ, GW, KM, ML, MR, NE, SN, TD, TG).

Published:
— *with international search report (Art. 21(3))*

(54) Title: PROCESSES FOR PRODUCING OPTICAL EFFECTS LAYERS

Fig. 10D

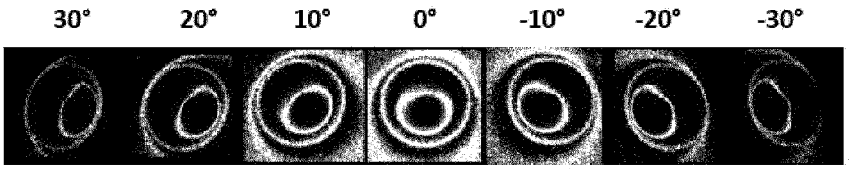

(57) Abstract: The invention relates to the field of the protection of security documents such as for example banknotes and identity documents against counterfeit and illegal reproduction. In particular, the present invention provides processes for optical effect layers (OEL) exhibiting two or more nested indicia using a magnetic assembly comprising i) a soft magnetic plate (x31) comprising a) one or more voids (V) and b) one or more indentations (I) and/or one or more protrusions (P), and ii) one or more dipole magnets (x32).

WO 2020/025218 A1

PROCESSES FOR PRODUCING OPTICAL EFFECTS LAYERS

FIELD OF THE INVENTION

[001] The present invention relates to the field of processes for producing optical effect layers (OELs) comprising magnetically oriented platelet-shaped magnetic or magnetizable pigment particles. In particular, the present invention provides processes for producing optical effect layers (OELs) exhibiting two or more nested indicia into coating layers comprising oriented platelet-shaped magnetic or magnetizable pigment particles and the use of said OELs as anti-counterfeit means on security documents or security articles as well as decorative purposes.

BACKGROUND OF THE INVENTION

[002] It is known in the art to use inks, compositions, coatings or layers containing oriented magnetic or magnetizable pigment particles, particularly also optically variable magnetic or magnetizable pigment particles, for the production of security elements, e.g. in the field of security documents. Coatings or layers comprising oriented magnetic or magnetizable pigment particles are disclosed for example in US 2,570,856; US 3,676,273; US 3,791,864; US 5,630,877 and US 5,364,689. Coatings or layers comprising oriented magnetic color-shifting pigment particles, resulting in particularly appealing optical effects, useful for the protection of security documents, have been disclosed in WO 2002/090002 A2 and WO 2005/002866 A1.

[003] Security features, e.g. for security documents, can generally be classified into “covert” security features on the one hand, and “overt” security features on the other hand. The protection provided by covert security features relies on the principle that such features are difficult to detect, typically requiring specialized equipment and knowledge for detection, whereas “overt” security features rely on the concept of being easily detectable with the unaided human senses, e.g. such features may be visible and/or detectable via the tactile sense while still being difficult to produce and/or to copy. However, the effectiveness of overt security features depends to a great extent on their easy recognition as a security feature.

[004] Magnetic or magnetizable pigment particles in printing inks or coatings allow for the production of magnetically induced images, designs and/or patterns through the application of a correspondingly structured magnetic field, inducing a local orientation of the magnetic or magnetizable pigment particles in the not yet hardened (i.e. wet) coating, followed by the hardening of the coating. The result is a fixed and stable magnetically induced image, design or pattern. Materials and technologies for the orientation of magnetic or magnetizable pigment particles in coating compositions have been disclosed for example in US 2,418,479; US 2,570,856; US 3,791,864, DE 2006848-A, US 3,676,273, US 5,364,689, US 6,103,361, EP 0 406 667 B1; US 2002/0160194; US 2004/0009308; EP 0 710 508 A1; WO 2002/09002 A2; WO 2003/000801 A2; WO 2005/002866 A1; WO 2006/061301 A1. In such a way, magnetically induced patterns which are highly resistant to counterfeit can be produced. The security element in question can only be produced by having access to both, the magnetic or magnetizable pigment particles or the corresponding ink, and the particular technology employed to print said ink and to orient said pigment in the printed ink.

[005] EP 1 641 624 B1, EP 1 937 415 B1 and EP 2 155 498 B1 disclose devices and method for magnetically transferring indicia into a not yet hardened (i.e. wet) coating composition comprising magnetic or magnetizable pigment particles so as to form optical effect layers (OELs). The disclosed methods advantageously allow the production of security documents and articles having a customer-specific magnetic design.

[006] EP 1 641 624 B1 discloses a device for magnetically transferring indicia corresponding to the design to be transferred into a wet coating composition comprising magnetic or magnetizable particles on a substrate. The disclosed device comprises a body of permanent-magnetic material being permanently magnetized in a direction substantially perpendicular to the surface of said body, wherein the surface of said body carries indicia in the form of engravings, causing perturbations of its magnetic field. The disclosed devices are well suited for transferring high-resolution patterns in high-speed printing processes such as those used in the field of security printing. However, and as described in EP 1 937 415 B1, the devices disclosed in EP 1 641 624 B1 may result in poorly reflecting optical effect layers having a rather dark visual appearance.

[007] EP 1 937 415 B1 discloses an improved device for magnetically transferring indicia into a wet coating composition comprising magnetic or magnetizable pigment flakes on a substrate. The disclosed device comprises at least one magnetized magnetic plate having a first magnetic field and having surface relief, engravings or cut-outs on a surface thereof representing said indicia and at least one additional magnet having a second magnetic field, wherein the additional magnet is fixedly positioned adjacent to the magnetic plate so as to produce substantial overlap of their magnetic fields.

[008] Moving-ring effects have been developed as efficient security elements. Moving-ring effects consist of optically illusive images of objects such as funnels, cones, bowls, circles, ellipses, and hemispheres that appear to move in any x-y direction depending upon the angle of tilt of said optical effect layer. Methods for producing moving-ring effects are disclosed for example in EP 1 710 756 A1, US 8,343,615, EP 2 306 222 A1, EP 2 325 677 A2, and US 2013/084411.

[009] WO 2011/092502 A2 discloses an apparatus for producing moving-ring images displaying a single apparently moving ring with changing viewing angle. The disclosed moving-ring images might be obtained or produced by using a device allowing the orientation of magnetic or magnetizable particles with the help of a magnetic field produced by the combination of a soft magnetizable sheet and a spherical magnet having its magnetic axis perpendicular to the plane of the coating layer and disposed below said soft magnetizable sheet.

[010] WO 2014/108404 A2 discloses optical effect layers (OEL) comprising a plurality of magnetically oriented non-spherical magnetic or magnetizable particles, which are dispersed in a coating. The specific magnetic orientation pattern of the disclosed OELs provides a viewer the optical effect or impression of a single loop-shaped body that moves upon tilting of the OEL. Moreover, WO 2014/108404 A2 discloses OELs further exhibiting an optical effect or impression of a protrusion within the loop-shaped body caused by a reflection zone in the central area surrounded by the loop-shaped body. The disclosed protrusion provides the impression of a three-dimensional object, such as a half-sphere, present in the central area surrounded by the loop-shape body.

[011] WO 2014/108303 A1 discloses optical effect layers (OEL) comprising a plurality of magnetically oriented non-spherical magnetic or magnetizable particles, which are dispersed in a coating. The specific magnetic orientation pattern of the disclosed OELs provides a viewer the optical effect or impression of a plurality of nested loop-shaped bodies surrounding one common central area, wherein said bodies exhibit a viewing-angle dependent apparent motion.

[0012] Therefore, a need remains for processes for producing customized optical effect layers (OELs) exhibiting multi, i.e. two or more, nested dynamic effects on a substrate with good quality, wherein said processes should be reliable, easy to implement and able to work at a high production speed while allowing the production of dynamic OELs exhibiting not only an eye-catching effect but also a bright and well resolved appearance.

SUMMARY OF THE INVENTION

[013] Accordingly, it is an object of the present invention to overcome one or more of the deficiencies of the prior art as discussed above. Aspects of the present disclosure provide a process for producing an optical effect layer (OEL) comprising the steps of:

a) applying onto a substrate (x20) surface a coating composition comprising i) platelet-shaped magnetic or magnetizable pigment particles and ii) a binder material so as to form a coating layer (x10) on said substrate (x20), said coating composition being in a first liquid state;

b) exposing the coating layer (x10) to a magnetic field of a magnetic assembly (x30) comprising

i) a soft magnetic plate (x31) comprising one or more soft magnetic metals, alloys or compounds of high magnetic permeability or made of a composite comprising from about 25 wt-% to about 95 wt-% of soft magnetic particles dispersed in a non-magnetic material, the weight percents being based on the total weight of the magnetic plate (x31),

wherein the soft magnetic plate (x31) comprises one or more voids (V) for receiving one or more dipole magnets (x32),

wherein the soft magnetic plate (x31) comprises one or more indentations (I) and/or one or more protrusions (P), each of said one or more indentations (I) and/or one or more protrusions (P) forming one or more continuous loop-shaped indicia and/or one or more discontinuous loop-shaped indicia, and

wherein the one or more voids (V) are surrounded by the one or more continuous loop-shaped indicia and/or the one or more voids (V) are surrounded by the one or more discontinuous loop-shaped indicia,

ii) the one or more dipole magnets (x32), each of said one or more dipole magnets (x32) having its magnetic axis substantially perpendicular to the substrate (x20) surface and all of said one or more dipole magnets (x32) having a same magnetic direction, wherein said one or more dipole magnets (x32) are disposed within the one or more voids (V);

and

c) hardening the coating composition to a second state so as to fix the platelet-shaped magnetic or magnetizable pigment particles in their adopted positions and orientations.

[014] Also described herein are optical effect layers (OELs) produced by the process described herein and security documents as well as decorative elements and objects comprising one or more optical OELs described herein.

[015] Also described herein are methods of manufacturing a security document or a decorative element or object, comprising a) providing a security document or a decorative element or object, and b) providing an optical effect layer such as those described herein, in particular such as those obtained by the process described herein, so that it is comprised by the security document or decorative element or object.

[016] Also described herein are use of the soft magnetic plate (x31) described herein together with the one or more dipole magnets (x32) described herein, wherein each of said one or more dipole magnets (x32) has a magnetic axis substantially perpendicular to the substrate (x20) surface (and substantially perpendicular to the soft magnetic plate (x31) surface) and all of said one or more dipole magnets (x32) have a same magnetic direction, wherein said one or more dipole magnets (x32) are disposed within the voids (V) for magnetically orienting platelet-shaped magnetic or magnetizable pigment particles in a coating layer on a substrate

[017] The present invention provides a reliable and easy to implement process to produce optical effects layers (OELs) exhibiting a highly dynamic multi, i.e. two or more, loop-shaped effects, said process comprising orienting platelet-shaped magnetic or magnetizable pigment particles into a coating layer formed from a coating composition in a first state, i.e. not yet hardened (i.e. wet) state, wherein the platelet-shaped magnetic or magnetizable pigment particles are free to move and rotate as to form said optical effect layer (OEL) having hardened the coating layer to a second state wherein orientation and position of the platelet-shaped magnetic or magnetizable pigment particles are fixed/frozen. Once the desire effect is created in the not yet hardened (i.e. wet) coating layer, the coating composition is partly or completely hardened so as to permanently fix/freeze the relative position and orientation of the platelet-shaped magnetic or magnetizable pigment particles in the OEL.

[018] An effect of the present invention, in particular of the soft magnetic plate and dipole magnets is allowing for producing customized optical effect layers exhibiting multi nested dynamic effects on a substrate with good quality, wherein the method of producing the optical effect layer is reliable, easy to be implemented and can be used at high production speeds, allowing for the production of dynamic optical effect layers exhibiting not only an eye-catching effect but also a bright and well-resolved appearance. In particular, the above described shape of the soft magnetic plate does not require a plurality of dipole magnets to obtain the desired effects of, for example, being able to produce an OEL exhibiting two or more nested indicia on a substrate.

[019] Moreover, the process provided by the present invention is mechanically robust, easy to implement with an industrial high-speed printing equipment, without resorting to cumbersome, tedious and expensive modifications of said equipment.

[020] In a preferred embodiment, the soft magnetic plate (x31) comprises the one or more indentations (I) and the top surface of the one or more dipole magnets (x32) is flush with the top surface of the soft magnetic plate (x31). This allows for a particularly compact configuration of the soft magnetic plate including the magnets.

[021] In another preferred embodiment, the soft magnetic plate (x31) comprises the one or more protrusions (P) and the top surface of the one or more dipole magnets (x32), is flush with the top surface of the soft magnetic plate (x31). This similarly allows for a particularly compact configuration of the soft magnetic plate including the magnets.

[022] Preferably, the process further comprises a step of exposing the coating layer (x10) to a dynamic magnetic field of a device so as to bi-axially orient at least a part of the platelet-shaped magnetic or magnetizable pigment particles, said step occurring prior to or simultaneously with step b) and before step c). This step allows for further increasing the complexity and/or quality of the indicia on the substrate.

[023] According to a preferred embodiment, the soft magnetic plate (x31) is made a composite comprising from about 25 wt-% to about 95 wt-% of soft magnetic particles dispersed in a non-magnetic material being a polymeric matrix comprising or consisting of either thermoplastic materials selected from the group consisting of polyamides, co-polyamides, polyphtalimides, polyolefins, polyesters, polytetrafluoroethylenes, polyacrylates, polymethacrylates, polyimides, polyetherimides, polyetheretherketones, polyaryletherketones, polyphenylene sulfides, liquid crystal polymers, polycarbonates and mixtures thereof or a thermosetting material selected from the group consisting of epoxy resins, phenolic resins, polyimide resins, silicon resins and mixtures thereof. These materials have proven to be particularly suitable for the process of producing an OEL.

[024] Preferably, the soft magnetic particles are selected from the group consisting of carbonyl iron, carbonyl nickel, cobalt and combinations thereof. Again, these materials have proven to be particularly suitable for the process of producing an OEL.

[025] In a preferred embodiment, the one or more voids (V) have a depth between about 5% and about 100% in comparison with the thickness of the soft magnetic plate (x31), and/or the one or more indentations (I) have a depth between about 5% and about 100%, preferably between about 5% and 90%, in comparison with the thickness of the soft magnetic plate (x31) and/or the one or more protrusions (P) have a height (H) between about 5% and about 100% in comparison with the thickness of the soft magnetic plates (x31). These relative sizes allow for a very compact, yet very effective soft magnetic plate in the present context.

[026] Further preferably, the diameter of the one or more dipole magnets (x32) is smaller than the size of the one or more voids (V). This allows the dipole magnets to not only be contained in the voids, but also allows for a more complex and, thus, more difficult to counterfeit appearance of the indicia.

[027] Preferably, the platelet-shaped magnetic or magnetizable pigment particles are platelet-shaped optically variable magnetic or magnetizable pigment particles selected from the group consisting of platelet-shaped magnetic thin-film interference pigment particles, platelet-shaped magnetic cholesteric liquid crystal pigment particles, platelet-shaped interference coated pigment particles comprising a magnetic material and mixtures of two or more thereof. These particles have proven to be particularly suitable for an OEL and are, thus, preferred.

BRIEF DESCRIPTION OF DRAWINGS

The optical effect layers (OEL) described herein and their production are now described in more detail with reference to the drawings and to particular embodiments, wherein

Fig. 1A schematically illustrates a top view of a soft magnetic plate (131) comprising a void (V), in particular a loop-shaped void (V), and an indentation (I) forming a continuous loop-shaped indicium, in particular a star. The void (V) is surrounded by the continuous loop-shaped formed by the indentation (I).

Fig. 1B schematically illustrates a top view of a soft magnetic plate (131) comprising a void (V), in particular a loop-shaped void (V), and more than one indentations (I) forming a discontinuous loop-shaped indicium, in particular a star. The void (V) is surrounded by the discontinuous loop-shaped formed by the indentation (I).

Fig. 2A-B schematically illustrate cross-sections of a soft magnetic plate (231) comprising a void (V) having a depth (D) of 100% (Fig. 2B) or a depth having less than 100 % (Fig. 2A).

Fig. 3A-D schematically illustrate top views of different embodiments of x indentations or protrusions with x = 1 (Fig. 3A), x = 2 (Fig. 3B), x = 3 (Fig. 3C) and x = 4 (Fig. 3D).

Fig. 4A schematically illustrates a cross-section of a soft magnetic plate (331) having a thickness (T), comprising a void (V) and an indentation (I).

Fig. 4B schematically illustrates a cross-section of a soft magnetic plate (431) having a thickness (T), comprising a void (V) and a protrusion (P) having a thickness (H).

Fig. 5A-B schematically illustrate cross-sections of a soft magnetic plate (531) comprising a void (V) having a depth of less than 100% and an indentation (I), wherein a dipole magnet (532) is disposed within the void (V).

Fig. 5C-F schematically illustrate cross-sections of a soft magnetic plate (531) comprising a void (V) having a depth of 100% and an indentation (I), wherein a dipole magnet (532) is disposed within the void (V).

Fig. 6A schematically illustrate a cross-section of a soft magnetic plate (631) comprising a void (V) having a depth of less than 100% and a protrusion (P), wherein a dipole magnet (632) is disposed within the void (V).

Fig. 6B-C schematically illustrate a cross-section of a soft magnetic plate (631) comprising a void (V) having a depth of 100% and a protrusion (P), wherein a dipole magnet (632) is disposed within the void (V).

Fig. 7A schematically illustrates a process for producing an optical effect layer (OEL) exhibiting five independent effects, wherein two or more nested loop-shaped, in particular a circular and a star-shaped, indicia can be observed on a substrate (720), said process comprising the use of i) a magnetic assembly (730) so as to orient at least a part of platelet-shaped magnetic or magnetizable pigment particles of a coating layer (710) made of a coating composition comprising said platelet-shaped magnetic or magnetizable pigment particles, wherein the magnetic assembly (730) comprises i) a soft magnetic plate (731) comprising loop-shaped, in particular a circular, voids (V) and loop-shaped, in particular star-shaped, indentations (I); and ii) dipole magnets (732) disposed symmetrically within the first loop defined by each of the loop-shaped voids (V) and having its top surface flush with the top surface of the soft magnetic plate (731) and having its bottom surface flush with the bottom

surface of the soft magnetic plate (731).

Fig. 7B-C schematically illustrate a top view (Fig. 7B) and a cross-section (Fig. 7C) of the soft magnetic plate (731) depicted in Fig. 7A.

Fig. 7D shows photographic images of an OEL, said OEL being obtained by using the process shown in Fig. 7A.

Fig. 8A schematically illustrates a process for producing an optical effect layer (OEL) exhibiting two or more nested loop-shaped, in particular two nested circular, indicia on a substrate (820), said process comprising the use of i) a magnetic assembly (830) so as to orient at least a part of platelet-shaped magnetic or magnetizable pigment particles of a coating layer (810) made of a coating composition comprising said platelet-shaped magnetic or magnetizable pigment particles, wherein the magnetic assembly (830) comprises i) a soft magnetic plate (831) comprising a loop-shaped, in particular a circular, void (V) and a loop-shaped, in particular a circular, indentation (I); and ii) a dipole magnet (832) disposed symmetrically within the first loop defined by the loop-shaped void (V) and having its top surface flush with the top surface of the soft magnetic plate (831).

Fig. 8B-C schematically illustrate a top view (Fig. 8B) and a cross-section (Fig. 8C) of the soft magnetic plate (831) depicted in Fig. 8A.

Fig. 8D shows photographic images of an OEL, said OEL being obtained by using the process shown in Fig. 8A.

Fig. 9A schematically illustrates a process for producing an optical effect layer (OEL) exhibiting two or more nested loop-shaped, in particular two nested circular, indicia on a substrate (920), said process comprising the use of i) an magnetic assembly (930) so as to orient at least a part of platelet-shaped magnetic or magnetizable pigment particles of a coating layer (910) made of a coating composition comprising said platelet-shaped magnetic or magnetizable pigment particles, wherein the magnetic assembly (930) comprises i) a soft magnetic plate (931) comprising a loop-shaped, in particular a circular, void (V) and a loop-shaped, in particular a circular, indentation (I); and ii) four dipole magnets (932a-d) disposed symmetrically within the first loop defined by the loop-shaped void (V), wherein one of said four dipole magnets (932a) has its top surface flush with the top surface of the soft magnetic plate (931) and three others dipole magnets (932b-d) are located below the dipole magnet (932a) .

Fig. 9B-C schematically illustrate a top view (Fig. 9B) and a cross-section (Fig. 9C) of the soft magnetic plate (931) depicted in Fig. 9A.

Fig. 9D photographic images of an OEL, said OEL being obtained by using the process shown in Fig. 9A.

Fig. 10A schematically illustrates a process for producing an optical effect layer (OEL) exhibiting two or more nested loop-shaped, in particular two nested circular, indicia on a substrate (1020), said process comprising the use of i) an magnetic assembly (1030) so as to orient at least a part of platelet-shaped magnetic or magnetizable pigment particles of a coating layer (1010) made of a coating composition comprising said platelet-shaped magnetic or magnetizable pigment particles, wherein the magnetic assembly (1030) comprises i) a soft magnetic plate (1031) comprising a loop-shaped, in particular a circular, void (V) and a loop-shaped, in particular a circular, protrusion (P); and ii) five dipole magnets (1032a-d) disposed symmetrically within the first loop defined by the loop-

shaped void (V), one of said five dipole magnets (1032a) having its top surface flush with the top surface of the soft magnetic plate (1031) and four others dipole magnets (1032b-e) are located below the dipole magnet (1032a).

Fig. 10B-C schematically illustrate a top view (Fig. 10B) and a cross-section (Fig. 10C) of the soft magnetic plate (1031) depicted in Fig. 10A.

Fig. 10D shows photographic images of an OEL, said OEL being obtained by using the process shown in Fig. 10A.

Fig. 11A schematically illustrates a process for producing an optical effect layer (OEL) exhibiting two or more nested loop-shaped, in particular a circular and a square-shaped, indicia on a substrate (1120), said process comprising the use of i) an magnetic assembly (1130) so as to orient at least a part of platelet-shaped magnetic or magnetizable pigment particles of a coating layer (1110) made of a coating composition comprising said platelet-shaped magnetic or magnetizable pigment particles, wherein the magnetic assembly (1130) comprises i) a soft magnetic plate (1131) comprising a loop-shaped, in particular a circular, void (V) and a loop-shaped, in particular a square-shaped, indentation (I); and ii) four dipole magnets (1132a-d) disposed symmetrically within the first loop defined by the loop-shaped void (V), one of said four magnets (1132a) having its top surface lower than the top surface the soft magnetic plate (1131) and three others dipole magnets (1132b-d) are located below the dipole magnet (1132a).

Fig. 11B-C schematically illustrate a top view (Fig. 11B) and a cross-section (Fig. 11C) of the soft magnetic plate (1131) depicted in Fig. 11A.

Fig. 11D shows photographic images of an OEL, said OEL being obtained by using the process shown in Fig. 11A.

Fig. 12A schematically illustrates a process for producing an optical effect layer (OEL) exhibiting two or more nested loop-shaped, in particular two nested circular, indicia on a substrate (1220), said process comprising the use of i) a magnetic assembly (1230) so as to orient at least a part of platelet-shaped magnetic or magnetizable pigment particles of a coating layer (1210) made of a coating composition comprising said platelet-shaped magnetic or magnetizable pigment particles, wherein the magnetic assembly (1230) comprises i) a soft magnetic plate (1231) comprising a loop-shaped, in particular a circular, void (V) and a loop-shaped, in particular a circular, indentation (I); and ii) four dipole magnets (1232a-d) disposed non-symmetrically within the first loop defined by the loop-shaped void (V), one of said four magnets (1232a) having its top surface flush with the top of the soft magnetic plate (1231) and three others dipole magnets (1232b-d) are located below the dipole magnet (1232a).

Fig. 12B-C schematically illustrate a top view (Fig. 12B) and a cross-section (Fig. 12C) of the soft magnetic plate (1231) depicted in Fig. 12A.

Fig. 12D shows photographic images of an OEL, said OEL being obtained by using the process shown in Fig. 12A.

Fig. 13A schematically illustrates a process for producing an optical effect layer (OEL) exhibiting two or more nested loop-shaped, in particular two nested star-shaped, indicia on a substrate (1320), said process comprising the use of i) a magnetic assembly (1330) so as to orient at least a part of platelet-shaped magnetic or magnetizable pigment particles of a coating layer (1310) made of a coating

composition comprising said platelet-shaped magnetic or magnetizable pigment particles, wherein the magnetic assembly (1330) comprises i) a soft magnetic plate (1331) comprising a loop-shaped, in particular a star-shaped, void (V) and a loop-shaped, in particular a star-shaped, indentation (I); and ii) three dipole magnets (1332a-c) disposed symmetrically within the first loop defined by the loop-shaped void (V), one of said magnets (1332a) having its top surface flush with the top surface of the soft magnetic plate (1331) two others dipole magnets (1332b-c) are located below the dipole magnet (1332a).

Fig. 13B-C schematically illustrate a top view (Fig. 13B) and a cross-section (Fig. 13C) of the soft magnetic plate (1331) depicted in Fig. 13A.

Fig. 13D photographic images of an OEL, said OEL being obtained by using the process shown in Fig. 13A.

Fig. 14A schematically illustrates a process for producing an optical effect layer (OEL) exhibiting two or more nested loop-shaped, in particular two nested star-shaped, indicia on a substrate (1420), said process comprising the use of i) a magnetic assembly (1430) so as to orient at least a part of platelet-shaped magnetic or magnetizable pigment particles of a coating layer (1410) made of a coating composition comprising said platelet-shaped magnetic or magnetizable pigment particles, wherein the magnetic assembly (1430) comprises i) a soft magnetic plate (1431) comprising a loop-shaped, in particular a star-shaped, void (V) and a loop-shaped, in particular a star-shaped, indentation (I); and ii) three dipole magnets (1432a-c) disposed symmetrically within the first loop defined by the loop-shaped void (V), one of said magnets (1432a) having its top surface flush with the top surface of the soft magnetic plate (1331) three others dipole magnets (1432b-d) are located below the dipole magnet (1432a).

Fig. 14B-C schematically illustrate a top view (Fig. 14B) and a cross-section (Fig. 14C) of the soft magnetic plate (1431) depicted in Fig. 14A.

Fig. 14D photographic images of an OEL, said OEL being obtained by using the process shown in Fig. 14A.

DETAILED DESCRIPTION

Definitions

[028] The following definitions are to be used to interpret the meaning of the terms discussed in the description and recited in the claims.

[029] As used herein, the indefinite article "a" indicates one as well as more than one and does not necessarily limit its referent noun to the singular.

[030] As used herein, the term “at least” is meant to define one or more than one, for example one or two or three.

[031] As used herein, the term “about” means that the amount or value in question may be the specific value designated or some other value in its neighborhood. Generally, the term “about” denoting a certain value is intended to denote a range within ± 5% of the value. As one example, the phrase “about 100” denotes a range of 100 ± 5, i.e. the range from 95 to 105. Generally, when the

term “about” is used, it can be expected that similar results or effects according to the invention can be obtained within a range of ±5% of the indicated value.

[032] As used herein, the term “and/or” means that either all or only one of the elements of said group may be present. For example, “A and/or B” shall mean “only A, or only B, or both A and B”. In the case of “only A”, the term also covers the possibility that B is absent, i.e. “only A, but not B”.

[033] The term “comprising” as used herein is intended to be non-exclusive and open-ended. Thus, for instance a coating composition comprising a compound A may include other compounds besides A. However, the term “comprising” also covers, as a particular embodiment thereof, the more restrictive meanings of “consisting essentially of” and “consisting of”, so that for instance “a fountain solution comprising A, B and optionally C” may also (essentially) consist of A and B, or (essentially) consist of A, B and C.

[034] The term “optical effect layer (OEL)” as used herein denotes a coating or layer that comprises oriented platelet-shaped magnetic or magnetizable pigment particles and a binder, wherein said platelet-shaped magnetic or magnetizable pigment particles are oriented by a magnetic field and wherein the oriented platelet-shaped magnetic or magnetizable pigment particles are fixed/frozen in their orientation and position (i.e. after hardening/curing) so as to form a magnetically induced image.

[035] The term “magnetic axis” denotes a theoretical line connecting the corresponding North and South Poles of a magnet and extending through said poles. This term does not include any specific magnetic direction.

[036] The term “magnetic direction” denotes the direction of the magnetic field vector along a magnetic field line pointing from the North Pole at the exterior of a magnet to the South Pole (see Handbook of Physics, Springer 2002, pages 463-464).

[037] The term "coating composition" refers to any composition which is capable of forming an optical effect layer (EOL) on a solid substrate and which can be applied preferably but not exclusively by a printing method. The coating composition comprises the platelet-shaped magnetic or magnetizable pigment particles described herein and the binder described herein.

[038] As used herein, the term “wet” refers to a coating layer which is not yet cured, for example a coating in which the platelet-shaped magnetic or magnetizable pigment particles are still able to change their positions and orientations under the influence of external forces acting upon them.

[039] As used herein, the term “indicia” shall mean discontinuous layers such as patterns, including without limitation symbols, alphanumeric symbols, motifs, letters, words, numbers, logos and drawings.

[040] The term “hardening” is used to denote a process wherein the viscosity of a coating composition in a first physical state which is not yet hardened (i.e. wet) is increased so as to convert it into a second physical state, i.e. a hardened or solid state, where the platelet-shaped magnetic or magnetizable pigment particles are fixed/frozen in their current positions and orientations and can no longer move nor rotate.

[041] The term "security document" refers to a document which is usually protected against counterfeit or fraud by at least one security feature. Examples of security documents include without limitation value documents and value commercial goods.

[042] The term “security feature” is used to denote an image, pattern or graphic element that can be used for authentication purposes.

[043] Where the present description refers to “preferred” embodiments/features, combinations of these “preferred” embodiments/features shall also be deemed as disclosed as long as this combination of “preferred” embodiments/features is technically meaningful.

[044] The present invention provides a process for producing an optical effect layer (OEL) exhibiting two or more nested indicia. The term “nested indicia” is used to denote an arrangement of indicia each providing the optical effect or optical impression of an indicium, wherein “nested” means that one or more of the indicia are surrounding another one or more indicia. Preferably, the so-obtained two or more nested indicia are two or more loop-shaped indicia and more preferably, said nested loop-shaped indicia are “concentric”, wherein the outmost one or more loop-shaped indicia completely surround the innermost one or more loop-shaped indicia without crossing each other. The optical effect layer (OEL) exhibiting two or more nested loop-shaped indicia, preferably two or more loop-shaped indicia, refers to a layer wherein the orientation of the platelet-shaped magnetic or magnetizable pigment particles described herein within the OEL allows the observation of said indicia.

[045] The two or more nested indicia may have any forms including without limitation symbols, alphanumeric symbols, motifs, letters, words, numbers, logos and drawings. The two or more nested loop-shaped indicia may have any forms including without limitation symbols, alphanumeric symbols, motifs, letters, words, numbers, logos and drawings having a loop-shaped form. The two or more nested indicia and the two or more nested loop-shaped indicia may have the same shape (e. g. in case of two indicia there are for instance two circles, two rectangles, two triangles, two hexagons etc.) or may have a different shape.

[046] As mentioned herein, the two or more nested indicia may have any forms including without limitation symbols, alphanumeric symbols, motifs, letters, words, numbers, logos and drawings. The one or more loop-shaped indicia may have a round, oval, ellipsoid, triangular, a square, rectangular or any polygonal shape. Examples of loop-shaped forms include a ring or circle, a rectangle or square (with or without rounded corners), a triangle (with or without rounded corners), a (regular or irregular) pentagon (with or without rounded corners), a (regular or irregular) hexagon (with or without rounded corners), a (regular or irregular) heptagon (with or without rounded corners), an (regular or irregular) octagon (with or without rounded corners), any polygonal shape (with or without rounded corners), a heart, a star, a moon, etc.

[047] The present invention provides a process for producing an optical effect layer (OEL) exhibiting two or more nested indicia, in particular two or more nested loop-shaped indicia, into a not yet hardened (i.e. wet or liquid) coating layer made of a coating composition comprising platelet-shaped magnetic or magnetizable pigment particles and a binder material on a substrate through the magnetic orientation of said pigment particles by exposing the coating layer (x10) to the magnetic field of the magnetic assembly (x30) comprising i) the soft magnetic plate (x31) described herein and comprising a) one or more voids (V), each of said one or more voids defining a indicium, preferably a loop-shaped indicium, and b) one or more indentations (I) and/or one or more protrusions (P), each of said one or

more indentations (I) and/or one or more protrusions (P) forming one or more continuous loop-shaped indicia and/or one or more discontinuous loop-shaped indicia and ii) the one or more dipole magnets (x32) described herein.

[048] The soft magnetic plate (x31) described herein comprises one or more indentations (I) and/or one or more protrusions (P), i.e. the soft magnetic plate (x31) described herein comprises one or more indentations, or comprises one or more protrusions, or comprises a combination of one or more indentations (I) and one or more protrusions (P).

[049] Each of said one or more indentations (I) and/or one or more protrusions (P) forms one or more continuous loop-shaped indicia and/or one or more discontinuous loop-shaped indicia. By "continuous loop-shaped indicia", it is meant that said indicia consist of a single piece having the shape of said indicia and, by "discontinuous loop-shaped indicia", it is meant that said indicia consist of a plurality of pieces forming together a loop-shaped indicia. Fig. 1A shows a view of of a soft magnetic plate (131) comprising a void (V) and one identation (I) forming a continuous loop-shaped indicium (i.e. a star). Fig. 1B shows a view of of a soft magnetic plate (131) comprising a void (V) and more than one identations (I) forming a discontinuous loop-shaped indicium (i.e. a star).

[050] Depending on the number of indentations (I) and protrusions (P), combinations of one or more continuous and/or one or more discontinuous loop-shaped indicia may be obtained including without limitations the following embodiments: (see Fig. 3A-D)

the soft magnetic plate (x31) described herein comprises one indentation (I), wherein said one indentation (I) forms a continuous loop-shaped indicium. In other words, said soft magnetic plate (x31) described herein comprises one loop-shaped indentation (I) (see Fig. 3A);

the soft magnetic plate (x31) described herein comprises one protrusion (P), wherein said one protrusion (P) forms a continuous loop-shaped indicium. In other words, said soft magnetic plate (x31) described herein comprises one loop-shaped protrusion (P) (see Fig. 3A);

the soft magnetic plate (x31) described herein comprises two indentations (I), wherein said two indentations (I) either form two continuous loop-shaped indicia or form one discontinuous loop-shaped indicium (see Fig. 3B);

the soft magnetic plate (x31) described herein comprises two protrusions (P), wherein said two protrusions (P) either form two continuous loop-shaped indicia or form one discontinuous loop-shaped indicium (see Fig. 3B);

the soft magnetic plate (x31) described herein comprises 3n indentations (I) with n = 1, 2, 3, etc., wherein said 3n indentations (I) either form 3n continuous loop-shaped indicia or form n discontinuous loop-shaped indicia. For example, the soft magnetic plate (x31) described herein comprises three indentations (I) (n = 1), wherein said three indentations (I) either form three continuous loop-shaped indicia or form one discontinuous loop-shaped indicium (see Fig. 3C);

the soft magnetic plate (x31) described herein comprises 3n protrusions (P) with n = 1, 2, 3, etc., wherein said 3n protrusions (P) either form 3n continuous loop-shaped indicia or form n discontinuous loop-shaped indicia. For example, the soft magnetic plate (x31) described herein comprises three protrusions (P) (n = 1), wherein said three protrusions (P) either form three continuous loop-shaped indicia or form one discontinuous loop-shaped indicium (see Fig. 3C);

the soft magnetic plate (x31) described herein comprises 4m indentations (I) with m = 1, 2, 3, etc., wherein said 4m indentations (I) either form 4m continuous loop-shaped indicia, form m discontinuous loop-shaped indicia, form m continuous loop-shaped indicia and m discontinuous loop-shaped indicia or form 2m continuous loop-shaped indicia and m discontinuous loop-shaped indicia. For example, the soft magnetic plate (x31) described herein comprises four indentations (I) (m = 1), wherein said four indentations (I) either form four continuous loop-shaped indicia, form one discontinuous loop-shaped indicium, form one continuous loop-shaped indicium and one discontinuous loop-shaped indicium or form two continuous loop-shaped indicia and two discontinuous loop-shaped indicia (see Fig. 3D);

the soft magnetic plate (x31) described herein comprises 4m protrusions (P) with m = 1, 2, 3, etc., wherein said 4m protrusions (P) either form 4m continuous loop-shaped indicia, form m discontinuous loop-shaped indicia, form m continuous loop-shaped indicia and m discontinuous loop-shaped indicia or form 2m continuous loop-shaped indicia and m discontinuous loop-shaped indicia. For example, the soft magnetic plate (x31) described herein comprises four protrusions (P) (m = 1), wherein said protrusions (P) either form four continuous loop-shaped indicia, form one discontinuous loop-shaped indicium, form one continuous loop-shaped indicium and one discontinuous loop-shaped indicium or form two continuous loop-shaped indicia and two discontinuous loop-shaped indicia (see Fig. 3D).

as well as any combinations thereof.

[051] The magnetic orientation and position of the platelet-shaped magnetic or magnetizable pigment particles is fixed/frozen by hardening the coating composition so as to obtain bright, highly resolved and dynamic optical effect layers (OELs). The two or more nested indicia, preferably the two or nested loop-shaped indicia, are transferred from the magnetic assembly (x30) to the not yet hardened coating layer (x10) comprising the platelet-shaped magnetic or magnetizable pigment particles. The present invention provides said processes to obtain customer-specific bright and highly resolved optical effect layers (OELs) exhibiting a dynamic appearance on a printed document or article in an easy-to-implement and highly reliable way.

[052] The process according to the present invention comprises the steps of:

a) applying onto a substrate (x20) surface the coating composition comprising the platelet-shaped magnetic or magnetizable pigment particles and the binder material described herein so as to form a coating layer (x10) on said substrate (x20), said coating composition being in a first liquid state;

b) exposing the coating layer (x10) to a magnetic field of the magnetic assembly (x30) described herein and comprising i) the soft magnetic plate (x31) described herein and comprising the one or more voids (V), and the one or more indentations (I) and/or one or more protrusions (P) described herein, wherein each of said one or more indentations (I) and/or one or more protrusions (P) forms one or more continuous loop-shaped indicia and/or one or more discontinuous loop-shaped indicia, and ii) the one or more dipole magnets (x32) described herein; and

c) hardening the coating composition to a second state so as to fix the platelet-shaped magnetic or magnetizable pigment particles in their adopted positions and orientations.

[053] The process described herein comprises a step a) of applying onto the substrate (x20) surface

described herein the coating composition comprising platelet-shaped magnetic or magnetizable pigment particles described herein so as to form a coating layer, said coating composition being in a first physical state which allows its application as a layer and which is in a not yet hardened (i.e. wet) state wherein the platelet-shaped magnetic or magnetizable pigment particles can move and rotate within the binder material. Since the coating composition described herein is to be provided on a substrate surface, it is necessary that the coating composition comprising at least the binder material described herein and the platelet-shaped magnetic or magnetizable pigment particles is in a form that allows its processing on the desired printing or coating equipment. Preferably, said step a) is carried out by a printing process, preferably selected from the group consisting of screen printing, rotogravure printing, flexography printing, inkjet printing and intaglio printing (also referred in the art as engraved copper plate printing and engraved steel die printing), more preferably selected from the group consisting of screen printing, rotogravure printing and flexography printing.

[054] Screen printing (also referred in the art as silkscreen printing) is a stencil process wherein an ink is transferred to a surface through a stencil supported by a fine fabric mesh of silk, mono- or multi-filaments made of synthetic fibers such as for example polyamides or polyesters or metal threads stretched tightly on a frame made for example of wood or a metal (e.g. aluminum or stainless steel). Alternatively, the screen-printing mesh may be a chemically etched, a laser-etched, or a galvanically formed porous metal foil, e.g. a stainless steel foil. The pores of the mesh are blocked in the non-image areas and left open in the image area, the image carrier being called the screen. Screen printing might be of the flat-bed or rotary type. Screen printing is further described for example in The Printing ink manual, R.H. Leach and R.J. Pierce, Springer Edition, 5th Edition, pages 58-62 and in Printing Technology, J.M. Adams and P.A. Dolin, Delmar Thomson Learning, 5th Edition, pages 293-328.

[055] Rotogravure (also referred in the art as gravure) is a printing process wherein the image elements are engraved into the surface of a cylinder. The non-image areas are at a constant original level. Prior to printing, the entire printing plate (non-printing and printing elements) is inked and flooded with ink. Ink is removed from the non-image by a wiper or a blade before printing, so that ink remains only in the cells. The image is transferred from the cells to the substrate by a pressure typically in the range of 2 to 4 bars and by the adhesive forces between the substrate and the ink. The term rotogravure does not encompass intaglio printing processes (also referred in the art as engraved steel die or copper plate printing processes) which rely for example on a different type of ink. More details are provided in “Handbook of print media”, Helmut Kipphan, Springer Edition, page 48 and in The Printing ink manual, R.H. Leach and R.J. Pierce, Springer Edition, 5th Edition, pages 42-51.

[056] Flexography preferably uses a unit with a doctor blade, preferably a chambered doctor blade, an anilox roller and plate cylinder. The anilox roller advantageously has small cells whose volume and/or density determines the ink application rate. The doctor blade lies against the anilox roller, and scraps off surplus ink at the same time. The anilox roller transfers the ink to the plate cylinder which finally transfers the ink to the substrate. Specific design might be achieved using a designed photopolymer plate. Plate cylinders can be made from polymeric or elastomeric materials. Polymers are mainly used as photopolymer in plates and sometimes as a seamless coating on a sleeve.

Photopolymer plates are made from light-sensitive polymers that are hardened by ultraviolet (UV) light. Photopolymer plates are cut to the required size and placed in an UV light exposure unit. One side of the plate is completely exposed to UV light to harden or cure the base of the plate. The plate is then turned over, a negative of the job is mounted over the uncured side and the plate is further exposed to UV light. This hardens the plate in the image areas. The plate is then processed to remove the unhardened photopolymer from the non-image areas, which lowers the plate surface in these non-image areas. After processing, the plate is dried and given a post-exposure dose of UV light to cure the whole plate. Preparation of plate cylinders for flexography is described in Printing Technology, J. M. Adams and P.A. Dolin, Delmar Thomson Learning, 5th Edition, pages 359-360 and in The Printing ink manual, R.H. Leach and R.J. Pierce, Springer Edition, 5th Edition, pages 33-42.

[057] The coating composition described herein as well as the coating layer described herein comprise platelet-shaped magnetic or magnetizable pigment particles. Preferably, the platelet-shaped magnetic or magnetizable pigment particles described herein are present in an amount from about 5 wt-% to about 40 wt-%, more preferably about 10 wt-% to about 30 wt-%, the weight percentages being based on the total weight of the coating composition.

[058] In contrast to needle-shaped pigment particles which can be considered as quasi one-dimensional particles, platelet-shaped pigment particles are quasi two-dimensional particles due to the large aspect ratio of their dimensions. Platelet-shaped pigment particle can be considered as a two-dimensional structure wherein the dimensions X and Y are substantially larger than the dimension Z. Platelet-shaped pigment particles are also referred in the art as oblate particles or flakes. Such pigment particles may be described with a main axis X corresponding to their longest dimension crossing the pigment particle and a second axis Y perpendicular to X and corresponding to the second longest dimension crossing the pigment particle. In other words, the XY plane roughly defines the plane formed by the first and second longest dimensions of the pigment particle, the Z dimension being ignored.

[059] The platelet-shaped magnetic or magnetizable pigment particles described herein have, due to their non-spherical shape, non-isotropic reflectivity with respect to incident electromagnetic radiation for which the hardened/cured binder material is at least partially transparent. As used herein, the term “non-isotropic reflectivity” denotes that the proportion of incident radiation from a first angle that is reflected by a particle into a certain (viewing) direction (a second angle) is a function of the orientation of the particles, i.e. that a change of the orientation of the particle with respect to the first angle can lead to a different magnitude of the reflection to the viewing direction.

[060] In the OELs described herein, the platelet-shaped magnetic or magnetizable pigment particles described herein are dispersed in the coating composition comprising a hardened binder material that fixes the orientation of the platelet-shaped magnetic or magnetizable pigment particles. The binder material is at least in its hardened or solid state (also referred to as second state herein), at least partially transparent to electromagnetic radiation of a range of wavelengths comprised between 200 nm and 2500 nm, i.e. within the wavelength range which is typically referred to as the “optical spectrum” and which comprises infrared, visible and UV portions of the electromagnetic spectrum. Accordingly, the particles contained in the binder material in its hardened or solid state and their

orientation-dependent reflectivity can be perceived through the binder material at some wavelengths within this range. Preferably, the hardened binder material is at least partially transparent to electromagnetic radiation of a range of wavelengths comprised between 200 nm and 800 nm, more preferably comprised between 400 nm and 700 nm. Herein, the term “transparent” denotes that the transmission of electromagnetic radiation through a layer of 20 µm of the hardened binder material as present in the OEL (not including the platelet-shaped magnetic or magnetizable pigment particles, but all other optional components of the OEL in case such components are present) is at least 50%, more preferably at least 60 %, even more preferably at least 70%, at the wavelength(s) concerned. This can be determined for example by measuring the transmittance of a test piece of the hardened binder material (not including the platelet-shaped magnetic or magnetizable pigment particles) in accordance with well-established test methods, e.g. DIN 5036-3 (1979-11). If the OEL serves as a covert security feature, then typically technical means will be necessary to detect the (complete) optical effect generated by the OEL under respective illuminating conditions comprising the selected non-visible wavelength; said detection requiring that the wavelength of incident radiation is selected outside the visible range, e.g. in the near UV-range. In this case, it is preferable that the OEL comprises luminescent pigment particles that show luminescence in response to the selected wavelength outside the visible spectrum contained in the incident radiation. The infrared, visible and UV portions of the electromagnetic spectrum approximately correspond to the wavelength ranges between 700-2500 nm, 400-700 nm, and 200-400 nm respectively.

[061] Suitable examples of platelet-shaped magnetic or magnetizable pigment particles described herein include without limitation pigment particles comprising a magnetic metal selected from the group consisting of cobalt (Co), iron (Fe), and nickel (Ni); a magnetic alloy of iron, manganese, cobalt, nickel or a mixture of two or more thereof; a magnetic oxide of chromium, manganese, cobalt, iron, nickel or a mixture of two or more thereof; or a mixture of two or more thereof. The term “magnetic” in reference to the metals, alloys and oxides is directed to ferromagnetic or ferrimagnetic metals, alloys and oxides. Magnetic oxides of chromium, manganese, cobalt, iron, nickel or a mixture of two or more thereof may be pure or mixed oxides. Examples of magnetic oxides include without limitation iron oxides such as hematite (Fe_2O_3), magnetite (Fe_3O_4), chromium dioxide (CrO_2), magnetic ferrites (MFe_2O_4), magnetic spinels (MR_2O_4), magnetic hexaferrites ($MFe_{12}O_{19}$), magnetic orthoferrites ($RFeO_3$), magnetic garnets $M_3R_2(AO_4)_3$, wherein M stands for two-valent metal, R stands for three-valent metal, and A stands for four-valent metal.

[062] Examples of platelet-shaped magnetic or magnetizable pigment particles described herein include without limitation pigment particles comprising a magnetic layer M made from one or more of a magnetic metal such as cobalt (Co), iron (Fe), or nickel (Ni); and a magnetic alloy of iron, cobalt or nickel, wherein said magnetic or magnetizable pigment particles may be multilayered structures comprising one or more additional layers. Preferably, the one or more additional layers are layers A independently made from one or more selected from the group consisting of metal fluorides such as magnesium fluoride (MgF_2), silicon oxide (SiO), silicon dioxide (SiO_2), titanium oxide (TiO_2), and aluminum oxide (Al_2O_3), more silicon preferably silicon dioxide (SiO_2); or layers B independently made from one or more selected from the group consisting of metals and metal alloys, preferably selected

from the group consisting of reflective metals and reflective metal alloys, and more preferably selected from the group consisting of aluminum (Al), chromium (Cr), and nickel (Ni), and still more preferably aluminum (Al); or a combination of one or more layers A such as those described hereabove and one or more layers B such as those described hereabove. Typical examples of the platelet-shaped magnetic or magnetizable pigment particles being multilayered structures described hereabove include without limitation A/M multilayer structures, A/M/A multilayer structures, A/M/B multilayer structures, A/B/M/A multilayer structures, A/B/M/B multilayer structures, A/B/M/B/A/multilayer structures, B/M multilayer structures, B/M/B multilayer structures, B/A/M/A multilayer structures, B/A/M/B multilayer structures, B/A/M/B/A/multilayer structures, wherein the layers A, the magnetic layers M and the layers B are chosen from those described hereabove.

[063] The coating composition described herein may comprise platelet-shaped optically variable magnetic or magnetizable pigment particles, and/or platelet-shaped magnetic or magnetizable pigment particles having no optically variable properties. Preferably, at least a part of the platelet-shaped magnetic or magnetizable pigment particles described herein is constituted by platelet-shaped optically variable magnetic or magnetizable pigment particles. In addition to the overt security provided by the colorshifting property of the optically variable magnetic or magnetizable pigment particles, which allows easily detecting, recognizing and/or discriminating an article or security document carrying an ink, coating composition, or coating layer comprising the optically variable magnetic or magnetizable pigment particles described herein from their possible counterfeits using the unaided human senses, the optical properties of the optically variable magnetic or magnetizable pigment particles may also be used as a machine readable tool for the recognition of the OEL. Thus, the optical properties of the optically variable magnetic or magnetizable pigment particles may simultaneously be used as a covert or semi-covert security feature in an authentication process wherein the optical (e.g. spectral) properties of the pigment particles are analyzed.

[064] The use of platelet-shaped optically variable magnetic or magnetizable pigment particles in coating layers for producing an OEL enhances the significance of the OEL as a security feature in security document applications, because such materials are reserved to the security document printing industry and are not commercially available to the public.

[065] As mentioned above, preferably at least a part of the platelet-shaped magnetic or magnetizable pigment particles is constituted by platelet-shaped optically variable magnetic or magnetizable pigment particles. These are more preferably selected from the group consisting of magnetic thin-film interference pigment particles, magnetic cholesteric liquid crystal pigment particles, interference coated pigment particles comprising a magnetic material and mixtures of two or more thereof.

[066] Magnetic thin film interference pigment particles are known to those skilled in the art and are disclosed e.g. in US 4,838,648; WO 2002/073250 A2; EP 0 686 675 B1; WO 2003/000801 A2; US 6,838,166; WO 2007/131833 A1; EP 2 402 401 A1 and in the documents cited therein. Preferably, the magnetic thin film interference pigment particles comprise pigment particles having a five-layer Fabry-Perot multilayer structure and/or pigment particles having a six-layer Fabry-Perot multilayer structure and/or pigment particles having a seven-layer Fabry-Perot multilayer structure.

[067] Preferred five-layer Fabry-Perot multilayer structures consist of absorber/dielectric/reflector/dielectric/absorber multilayer structures wherein the reflector and/or the absorber is also a magnetic layer, preferably the reflector and/or the absorber is a magnetic layer comprising nickel, iron and/or cobalt, and/or a magnetic alloy comprising nickel, iron and/or cobalt and/or a magnetic oxide comprising nickel (Ni), iron (Fe) and/or cobalt (Co).

[068] Preferred six-layer Fabry-Perot multilayer structures consist of absorber/dielectric/reflector/magnetic/dielectric/absorber multilayer structures.

[069] Preferred seven-layer Fabry Perot multilayer structures consist of absorber/dielectric/reflector/magnetic/reflector/dielectric/absorber multilayer structures such as disclosed in US 4,838,648.

[070] Preferably, the reflector layers described herein are independently made from one or more selected from the group consisting of metals and metal alloys, preferably selected from the group consisting of reflective metals and reflective metal alloys, more preferably selected from the group consisting of aluminum (Al), silver (Ag), copper (Cu), gold (Au), platinum (Pt), tin (Sn), titanium (Ti), palladium (Pd), rhodium (Rh), niobium (Nb), chromium (Cr), nickel (Ni), and alloys thereof, even more preferably selected from the group consisting of aluminum (Al), chromium (Cr), nickel (Ni) and alloys thereof, and still more preferably aluminum (Al). Preferably, the dielectric layers are independently made from one or more selected from the group consisting of metal fluorides such as magnesium fluoride (MgF_2), aluminum fluoride (AlF_3), cerium fluoride (CeF_3), lanthanum fluoride (LaF_3), sodium aluminum fluorides (e.g. Na_3AlF_6), neodymium fluoride (NdF_3), samarium fluoride (SmF_3), barium fluoride (BaF_2), calcium fluoride (CaF_2), lithium fluoride (LiF), and metal oxides such as silicon oxide (SiO), silicon dioxide (SiO_2), titanium oxide (TiO_2), aluminum oxide (Al_2O_3), more preferably selected from the group consisting of magnesium fluoride (MgF_2) and silicon dioxide (SiO_2) and still more preferably magnesium fluoride (MgF_2). Preferably, the absorber layers are independently made from one or more selected from the group consisting of aluminum (Al), silver (Ag), copper (Cu), palladium (Pd), platinum (Pt), titanium (Ti), vanadium (V), iron (Fe) tin (Sn), tungsten (W), molybdenum (Mo), rhodium (Rh), Niobium (Nb), chromium (Cr), nickel (Ni), metal oxides thereof, metal sulfides thereof, metal carbides thereof, and metal alloys thereof, more preferably selected from the group consisting of chromium (Cr), nickel (Ni), metal oxides thereof, and metal alloys thereof, and still more preferably selected from the group consisting of chromium (Cr), nickel (Ni), and metal alloys thereof. Preferably, the magnetic layer comprises nickel (Ni), iron (Fe) and/or cobalt (Co); and/or a magnetic alloy comprising nickel (Ni), iron (Fe) and/or cobalt (Co); and/or a magnetic oxide comprising nickel (Ni), iron (Fe) and/or cobalt (Co). When magnetic thin film interference pigment particles comprising a seven-layer Fabry-Perot structure are preferred, it is particularly preferred that the magnetic thin film interference pigment particles comprise a seven-layer Fabry-Perot absorber/dielectric/reflector/magnetic/reflector/dielectric/absorber multilayer structure consisting of a Cr/MgF_2/Al/Ni/Al/MgF_2/Cr multilayer structure.

[071] The magnetic thin film interference pigment particles described herein may be multilayer pigment particles being considered as safe for human health and the environment and being based for example on five-layer Fabry-Perot multilayer structures, six-layer Fabry-Perot multilayer structures and

seven-layer Fabry-Perot multilayer structures, wherein said pigment particles include one or more magnetic layers comprising a magnetic alloy having a substantially nickel-free composition including about 40 wt-% to about 90 wt-% iron, about 10 wt-% to about 50 wt-% chromium and about 0 wt-% to about 30 wt-% aluminum. Typical examples of multilayer pigment particles being considered as safe for human health and the environment can be found in EP 2 402 401 A1 whose content is hereby incorporated by reference in its entirety.

[072] Magnetic thin film interference pigment particles described herein are typically manufactured by a conventional deposition technique of the different required layers onto a web. After deposition of the desired number of layers, e.g. by physical vapor deposition (PVD), chemical vapor deposition (CVD) or electrolytic deposition, the stack of layers is removed from the web, either by dissolving a release layer in a suitable solvent, or by stripping the material from the web. The so-obtained material is then broken down to flakes which have to be further processed by grinding, milling (such as for example jet milling processes) or any suitable method so as to obtain pigment particles of the required size. The resulting product consists of flat flakes with broken edges, irregular shapes and different aspect ratios. Further information on the preparation of suitable magnetic thin film interference pigment particles can be found e.g. in EP 1 710 756 A1 and EP 1 666 546 A1 whose contents are hereby incorporated by reference.

[073] Suitable magnetic cholesteric liquid crystal pigment particles exhibiting optically variable characteristics include without limitation magnetic monolayered cholesteric liquid crystal pigment particles and magnetic multilayered cholesteric liquid crystal pigment particles. Such pigment particles are disclosed for example in WO 2006/063926 A1, US 6,582,781 and US 6,531,221. WO 2006/063926 A1 discloses monolayers and pigment particles obtained therefrom with high brilliance and colorshifting properties with additional particular properties such as magnetizability. The disclosed monolayers and pigment particles, which are obtained therefrom by comminuting said monolayers, include a three-dimensionally crosslinked cholesteric liquid crystal mixture and magnetic nanoparticles. US 6,582,781 and US 6,410,130 disclose platelet-shaped cholesteric multilayer pigment particles which comprise the sequence $A^1/B/A^2$, wherein A^1 and A^2 may be identical or different and each comprises at least one cholesteric layer, and B is an interlayer absorbing all or some of the light transmitted by the layers A^1 and A^2 and imparting magnetic properties to said interlayer. US 6,531,221 discloses platelet-shaped cholesteric multilayer pigment particles which comprise the sequence A/B and optionally C, wherein A and C are absorbing layers comprising pigment particles imparting magnetic properties, and B is a cholesteric layer.

[074] Suitable interference coated pigments comprising one or more magnetic materials include without limitation structures consisting of a substrate selected from the group consisting of a core coated with one or more layers, wherein at least one of the core or the one or more layers have magnetic properties. For example, suitable interference coated pigments comprise a core made of a magnetic material such as those described hereabove, said core being coated with one or more layers made of one or more metal oxides, or they have a structure consisting of a core made of synthetic or natural micas, layered silicates (e.g. talc, kaolin and sericite), glasses (e.g. borosilicates), silicon

dioxides (SiO_2), aluminum oxides (Al_2O_3), titanium oxides (TiO_2), graphites and mixtures of two or more thereof. Furthermore, one or more additional layers such as coloring layers may be present.

[075] The magnetic or magnetizable pigment particles described herein may be surface treated so as to protect them against any deterioration that may occur in the coating composition and coating layer and/or to facilitate their incorporation in said coating composition and coating layer; typically corrosion inhibitor materials and/or wetting agents may be used.

[076] Further, subsequently to the application of the coating composition described herein on the substrate (x20) surface described herein so as to form the coating layer (x10) (step a)), the coating layer (x10) is exposed (step b)) to the magnetic field of the magnetic assembly (x30) comprising the soft magnetic plate (x31) comprising the one or more voids (V), preferably the one or more loop-shaped voids (V) described herein, for receiving the one or more dipole magnets (x32) described herein and the one or more indentations (I) and/or the one or more protrusions (P), forming the one or more continuous loop-shaped indicia and/or the one or more discontinuous loop-shaped indicia; and the one or more dipole magnets (x32) described herein.

[077] Subsequently to or partially simultaneously, preferably partially simultaneously, with the steps of orienting the platelet-shaped magnetic or magnetizable pigment particles described herein (step b)), the orientation of the platelet-shaped magnetic or magnetizable pigment particles is fixed or frozen (step c)). The coating composition must thus noteworthy have a first liquid state wherein the coating composition is not yet hardened and wet or soft enough, so that the platelet-shaped magnetic or magnetizable pigment particles dispersed in the coating composition are freely movable, rotatable and orientable upon exposure to a magnetic field, and a second hardened (e.g. solid or solid-like) state, wherein the platelet-shaped magnetic or magnetizable pigment particles are fixed or frozen in their respective positions and orientations.

[078] Such a first and second state is preferably provided by using a certain type of coating composition. For example, the components of the coating composition other than the platelet-shaped magnetic or magnetizable pigment particles may take the form of an ink or coating composition such as those which are used in security applications, e.g. for banknote printing. The aforementioned first and second states can be provided by using a material that shows an increase in viscosity in reaction to a stimulus such as for example a temperature change or an exposure to an electromagnetic radiation. That is, when the fluid binder material is hardened or solidified, said binder material converts into the second state, i.e. a hardened or solid state, where the platelet-shaped magnetic or magnetizable pigment particles are fixed in their current positions and orientations and can no longer move nor rotate within the binder material. As known to those skilled in the art, ingredients comprised in an ink or coating composition to be applied onto a surface such as a substrate and the physical properties of said ink or coating composition must fulfil the requirements of the process used to transfer the ink or coating composition to the substrate surface. Consequently, the binder material comprised in the coating composition described herein is typically chosen among those known in the art and depends on the coating or printing process used to apply the ink or coating composition and the chosen hardening process.

[079] The OEL described herein comprises platelet-shaped magnetic or magnetizable pigment particles that, due to their shape, have non-isotropic reflectivity. The platelet-shaped magnetic or magnetizable pigment particles are dispersed in the binder material being at least partially transparent to electromagnetic radiation of one or more wavelength ranges in the range of 200 nm to 2500 nm.

[080] The hardening step described herein (step c)) can be of purely physical nature, e.g. in cases where the coating composition comprises a polymeric binder material and a solvent and is applied at high temperatures. Then, the platelet-shaped magnetic or magnetizable pigment particles are oriented at high temperature by the application of a magnetic field, and the solvent is evaporated, followed by cooling of the coating composition. Thereby the coating composition is hardened and the orientation of the pigment particles is fixed.

[081] Alternatively and preferably, the hardening of the coating composition involves a chemical reaction, for instance by curing, which is not reversed by a simple temperature increase (e.g. up to 80°C) that may occur during a typical use of a security document. The term “curing” or “curable” refers to processes including the chemical reaction, crosslinking or polymerization of at least one component in the applied coating composition in such a manner that it turns into a polymeric material having a greater molecular weight than the starting substances. Preferably, the curing causes the formation of a stable three-dimensional polymeric network. Such a curing is generally induced by applying an external stimulus to the coating composition (i) after its application on a substrate (step a)) and (ii) subsequently to, or partially simultaneously with the orientation of at least part of the platelet-shaped magnetic or magnetizable pigment particles (step b)). Advantageously the hardening (step c)) of the coating composition described herein is carried out partially simultaneously with the orientation of at least a part of the platelet-shaped magnetic or magnetizable pigment particles (step c)). Therefore, preferably the coating composition is selected from the group consisting of radiation curable compositions, thermally drying compositions, oxidatively drying compositions, and combinations thereof. Particularly preferred are coating compositions selected from the group consisting of radiation curable compositions. Radiation curing, in particular UV-Vis curing, advantageously leads to an instantaneous increase in viscosity of the coating composition after exposure to the irradiation, thus preventing any further movement of the pigment particles and in consequence any loss of information after the magnetic orientation step. Preferably, the hardening step (step d)) is carried out by irradiation with UV-visible light (i.e. UV-Vis light radiation curing) or by E-beam (i.e. E-beam radiation curing), more preferably by irradiation with UV-Vis light.

[082] Therefore, suitable coating compositions for the present invention include radiation curable compositions that may be cured by UV-visible light radiation (hereafter referred as UV-Vis-curable) or by E-beam radiation (hereafter referred as EB). According to one particularly preferred embodiment of the present invention, the coating composition described herein is a UV-Vis-curable coating composition. UV-Vis curing advantageously allows very fast curing processes and hence drastically decreases the preparation time of the OEL described herein, documents and articles and documents comprising said OEL.

[083] Preferably, the UV-Vis-curable coating composition comprises one or more compounds selected from the group consisting of radically curable compounds and cationically curable

compounds. The UV-Vis-curable coating composition described herein may be a hybrid system and comprise a mixture of one or more cationically curable compounds and one or more radically curable compounds. Cationically curable compounds are cured by cationic mechanisms typically including the activation by radiation of one or more photoinitiators which liberate cationic species, such as acids, which in turn initiate the curing so as to react and/or cross-link the monomers and/or oligomers to thereby harden the coating composition. Radically curable compounds are cured by free radical mechanisms typically including the activation by radiation of one or more photoinitiators, thereby generating radicals which in turn initiate the polymerization so as to harden the coating composition. Depending on the monomers, oligomers or prepolymers used to prepare the binder comprised in the UV-Vis-curable coating compositions described herein, different photoinitiators might be used. Suitable examples of free radical photoinitiators are known to those skilled in the art and include without limitation acetophenones, benzophenones, benzyldimethyl ketals, alpha-aminoketones, alpha-hydroxyketones, phosphine oxides and phosphine oxide derivatives, as well as mixtures of two or more thereof. Suitable examples of cationic photoinitiators are known to those skilled in the art and include without limitation onium salts such as organic iodonium salts (e.g. diaryl iodoinium salts), oxonium (e.g. triaryloxonium salts) and sulfonium salts (e.g. triarylsulphonium salts), as well as mixtures of two or more thereof. Other examples of useful photoinitiators can be found in standard textbooks. It may also be advantageous to include a sensitizer in conjunction with the one or more photoinitiators in order to achieve efficient curing. Typical examples of suitable photosensitizers include without limitation isopropyl-thioxanthone (ITX), 1-chloro-2-propoxy-thioxanthone (CPTX), 2-chloro-thioxanthone (CTX) and 2,4-diethyl-thioxanthone (DETX) and mixtures of two or more thereof. The one or more photoinitiators comprised in the UV-Vis-curable coating compositions are preferably present in a total amount from about 0.1 wt-% to about 20 wt-%, more preferably about 1 wt-% to about 15 wt-%, the weight percents being based on the total weight of the UV-Vis-curable coating compositions.

[084] Alternatively, a polymeric thermoplastic binder material or a thermoset may be employed. Unlike thermosets, thermoplastic resins can be repeatedly melted and solidified by heating and cooling without incurring any important changes in properties. Typical examples of thermoplastic resin or polymer include without limitation polyamides, polyesters, polyacetals, polyolefins, styrenic polymers, polycarbonates, polyarylates, polyimides, polyether ether ketones (PEEK), polyetherketeoneketones (PEKK), polyphenylene based resins (e.g. polyphenylenethers, polyphenylene oxides, polyphenylene sulfides), polysulphones and mixtures of two or more thereof.

[085] The coating composition described herein may further comprise one or more coloring components selected from the group consisting of organic pigment particles, inorganic pigment particles, and organic dyes, and/or one or more additives. The latter include without limitation compounds and materials that are used for adjusting physical, rheological and chemical parameters of the coating composition such as the viscosity (e.g. solvents, thickeners and surfactants), the consistency (e.g. anti-settling agents, fillers and plasticizers), the foaming properties (e.g. antifoaming agents), the lubricating properties (waxes, oils), UV stability (photostabilizers), the adhesion properties, the antistatic properties, the storage stability (polymerization inhibitors) etc. Additives

described herein may be present in the coating composition in amounts and in forms known in the art, including so-called nano-materials where at least one of the dimensions of the additive is in the range of 1 to 1000 nm.

[086] The coating composition described herein may further comprise one or more additives including without limitation compounds and materials which are used for adjusting physical, rheological and chemical parameters of the composition such as the viscosity (e.g. solvents and surfactants), the consistency (e.g. anti-settling agents, fillers and plasticizers), the foaming properties (e.g. antifoaming agents), the lubricating properties (waxes), UV reactivity and stability (photosensitizers and photostabilizers) and adhesion properties, etc. Additives described herein may be present in the coating compositions described herein in amounts and in forms known in the art, including in the form of so-called nano-materials where at least one of the dimensions of the particles is in the range of 1 to 1000 nm.

[087] The coating composition described herein may further comprise one or more marker substances or taggants and/or one or more machine readable materials selected from the group consisting of magnetic materials (different from the magnetic or magnetizable pigment particles described herein), luminescent materials, electrically conductive materials and infrared-absorbing materials. As used herein, the term “machine readable material” refers to a material which exhibits at least one distinctive property which is detectable by a device or a machine, and which can be comprised in a coating so as to confer a way to authenticate said coating or article comprising said coating by the use of a particular equipment for its detection and/or authentication.

[088] The coating compositions described herein may be prepared by dispersing or mixing the magnetic or magnetizable pigment particles described herein and the one or more additives when present in the presence of the binder material described herein, thus forming liquid compositions. When present, the one or more photoinitiators may be added to the composition either during the dispersing or mixing step of all other ingredients or may be added at a later stage, i.e. after the formation of the liquid coating composition.

[089] As described herein, the coating layer (x10) is exposed to the magnetic field of the magnetic assembly (x30) described herein.

[090] The magnetic assembly (x30) described herein comprises the soft magnetic plate (x31) described herein, wherein said soft magnetic plate (x31) is made of one or more soft magnetic metals, alloys or compounds of high magnetic permeability or made of a composite comprising from about 25 wt-% to about 95 wt-% of soft magnetic particles dispersed in a non-magnetic material, the weight percents being based on the total weight of the magnetic plate (x31), comprises the one or more voids (V), preferably the one or more loop-shaped voids (V), described herein for receiving the one or more dipole magnets (x32) described herein, and comprises the one or more indentations (I) and/or the one or more protrusions (P) described herein, each of said one or more indentations (I) and/or one or more protrusions (P) forming one or more continuous loop-shaped indicia and/or one or more discontinuous loop-shaped indicia.

[091] The soft magnetic plate (x31) described herein comprises the one or more voids (V) described herein. When more than one voids (V) are comprised in the soft magnetic plate (x31) described

herein, said voids (V) may have a same shape or may have a different shape. When more than one voids (V) are comprised in the soft magnetic plate (x31) described herein, each of said more than one voids (V) may be surrounded by the one or more continuous loop-shaped indicia and/or each of said more than one voids (V) is surrounded by the one or more discontinuous loop-shaped indicia. Alternatively, two or more of said more than one voids (V) may be surrounded by the one or more continuous loop-shaped indicia and/or each of said more than one voids (V) is surrounded by the one or more discontinuous loop-shaped indicia.

[092] According to one embodiment, the soft magnetic plate (x31) described herein comprises one or more voids (V) having a shape that is not a looped shape and one or more loop-shaped voids (V) described herein.

[093] According to another embodiment, the soft magnetic plate (x31) described herein comprises one or more loop-shaped voids (V). When more than one loop-shaped voids (V) are comprised in the soft magnetic plate (x31) described herein, said loop-shaped voids (V) may have a same shape or may have a different shape.

[094] Fig. 1A-B schematically depict views of a soft magnetic plate (131) having a thickness (T) and comprising a void (V), in a particular a loop-shaped void (V) (a circular void in Fig. 1A-B). The term “void” means, in the context of the present invention, a recess in the soft magnetic plate (see Fig 2A) or a hole or channel which goes through the soft magnetic plate (see Fig 2B) and connects both sides thereof.

[095] Fig. 2A-B schematically depict cross sections of a soft magnetic plate (231) comprising a void (V), wherein said void (V) has a depth (D). According to one embodiment and as shown for example in Fig. 2A, the soft magnetic plate (231) described herein comprises the one or more voids (V) having a depth of less than 100%, i.e. the one or more voids (V) are in the form of recesses. According to another embodiment and as shown for example in Fig. 2B, the soft magnetic plate (331) described herein comprises the one or more voids (V) having a depth of 100%, i.e. the one or more voids (V) are in the form of holes or channels which go through the soft magnetic plate (331) and connect both sides thereof.

[096] The one or more voids (V), preferably the one or more loop-shaped voids (V), of the soft magnetic plate (x31) described herein are designed to receive the one or more dipole magnets (x32) described herein, i.e. they allow the incorporation of the one or more dipole magnets (x32) described herein in said soft magnetic plate (x31).

[097] According to one embodiment, the soft magnetic plate (x31) described herein comprises the one or more voids (V), preferably the one or more loop-shaped voids (V), described herein, wherein said one or more voids, in particular voids having a depth of 100%, may be filled up with a non-magnetic material including a polymeric binder such as those described hereafter and optionally fillers. The soft magnetic plate (x31) described herein comprising the one or more voids (V), preferably the one or more loop-shaped voids (V), described herein may be arranged on a non-magnetic holder or spacer (x33) such as described hereafter.

[098] In addition to the one or more voids (V), preferably the one or more loop-shaped voids (V), described herein, and as shown for example in Fig. 1 and 3-6, the soft magnetic plate (x31) described

herein further comprises one or more indentations (I) and/or one or more protrusions (P), wherein each of said one or more indentations (I) and/or one or more protrusions (P) forming one or more continuous loop-shaped indicia and/or one or more discontinuous loop-shaped indicia described herein. As shown for example in Fig. 1 and 3-6 and as described above, the one or more voids (V) described herein are surrounded by the one or more continuous loop-shaped indicia and/or the one or more voids (V) are surrounded by the one or more discontinuous loop-shaped indicia formed by the one or more indentations (I) and/or one or more protrusions (P) described herein.

[099] According to one embodiment, the one or more voids (V) described herein are loop-shaped voids (V) and said one or more loop-shaped voids (V) are surrounded and nested by the one or more continuous loop-shaped indicia, and/or by the one or more discontinuous loop-shaped indicia formed by the one or more indentations (I) and/or one or more protrusions (P) described herein. In other words, the loop(s) defined by the one or more loop-shaped voids (V) and the loop(s) defined by the one or more indentations (I) and/or by the one or more protrusions (P) are nested, wherein the outmost loop defined by the one or more continuous loop-shaped indicia and/or the one or more discontinuous loop-shaped indicia formed by the one or more indentations (I) and/or one or more protrusions (P) surrounds the innermost loop defined by the one or more loop-shaped voids (V).

[0100] According to one embodiment and as shown for example in Fig. 4A, the soft magnetic plate (x31) described herein comprises one or more indentations (I). As shown for example in Fig. 4A, the soft magnetic plate (x31) described herein comprises one or more indentations (I) (e.g. a single loop-shaped indentation (I) or two indentations (I)). As shown in Fig. 4A, the thickness (T) of the soft magnetic plate (441) comprising one or more loop-shaped voids (V) and one or more indentations (I) refers to the thickness of the regions of the soft magnetic plate (431) lacking the one or more indentations (I) and lacking the one or more voids (V) (i.e. the thickness of the non-indented regions of the soft magnetic plate (431)).

[0101] According to another embodiment and as shown for example in Fig. 4B, the soft magnetic plate (x31) described herein comprises one or more protrusions (P).

[0102] The expression “protrusion” refers to a positive relief extending out of the surface. Fig. 4B schematically depicts a cross section of a soft magnetic plate (431) comprising one or more protrusions (P) (e.g. a single loop-shaped protrusion (P) or two protrusions (P)). As shown in Fig. 4B, the soft magnetic plate (431) has a thickness (T) and said protrusion (P) has a height (H). The thickness (T) of the soft magnetic plate (x31) comprising one or more protrusions (P) refers to the total thickness of the soft magnetic plate (x31), i.e. the combination of the height (H) of the highest protrusion of the one or more protrusions (P) and the thickness of the regions of the soft magnetic plate (x31) lacking said one or more protrusions (P).

[0103] According to another embodiment, the soft magnetic plate (x31) described herein comprises one or more indentations (I) and one or more protrusions (P).

[0104] The one or more regions lacking the one or more protrusions (P) of the soft magnetic plate (x31) described herein may be filled up with a non-magnetic material including a polymeric binder such as those described hereabove and optionally fillers. The soft magnetic plate (x31) described

herein comprising one or more protrusion (P) may be arranged on a non-magnetic holder or spacer (x33) such as described hereafter.

[0105] In addition to the soft magnetic plate (x31) described herein, the magnetic assembly (x30) described herein comprises the one or more dipole magnets (x32) described herein, wherein all of said one or more dipole magnets (x32) have their magnetic axis substantially perpendicular to the substrate (x20) surface (also substantially perpendicular to the soft magnetic plate (x31) surface) and all of said one or more dipole magnets (x32) have a same magnetic direction.

[0106] The one or more dipole magnets (x32) disposed are preferably independently made of high-coercivity materials (also referred as strong magnetic materials). Suitable high-coercivity materials are materials having a coercivity field value of at least 50 kA/m, preferably at least 200 kA/m, more preferably at least 1000 kA/m, even more preferably at least 1700 kA/m. They are preferably made of one or more sintered or polymer bonded magnetic materials selected from the group consisting of Alnicos such as for example Alnico 5 (R1-1-1), Alnico 5 DG (R1-1-2), Alnico 5-7 (R1-1-3), Alnico 6 (R1-1-4), Alnico 8 (R1-1-5), Alnico 8 HC (R1-1-7) and Alnico 9 (R1-1-6); hexaferrites of formula $MFe_{12}0_{19}$, (e.g. strontium hexaferrite ($SrO*6Fe_20_3$) or barium hexaferrites ($BaO*6Fe_20_3$)), hard ferrites of the formula MFe_20_4 (e.g. as cobalt ferrite ($CoFe_20_4$) or magnetite (Fe_3O_4)), wherein M is a bivalent metal ion), ceramic 8 (SI-1-5); rare earth magnetic materials selected from the group comprising $RECo_5$ (with RE = Sm or Pr), RE_2TM_{17} (with RE = Sm, TM = Fe, Cu, Co, Zr, Hf), $RE_2TM_{14}B$ (with RE = Nd, Pr, Dy, TM = Fe, Co); anisotropic alloys of Fe Cr Co; materials selected from the group of PtCo, MnAlC, RE Cobalt 5/16, RE Cobalt 14. Preferably, the high-coercivity materials of the one or more dipole magnets (x32) are selected from the groups consisting of rare earth magnetic materials, and more preferably from the group consisting of $Nd_2Fe_{14}B$ and $SmCo_5$. Particularly preferred are easily workable permanent-magnetic composite materials that comprise a permanent-magnetic filler, such as strontium-hexaferrite ($SrFe_{12}O_{19}$) or neodymium-iron-boron ($Nd_2Fe_{14}B$) powder, in a plastic- or rubber-type matrix.

[0107] The soft magnetic plate (x31) described herein comprises the one or more voids (V), preferably the one or more loop-shaped voids (V), described herein, wherein each of said one or more voids (V) allows the incorporation of the one or more dipole magnets (x32) described herein in said soft magnetic plate (x31).

[0108] The one or more dipole magnets (x32) described herein may be disposed symmetrically or non-symmetrically within the one or more voids (V), described herein.

[0109] As shown for example in Fig. 9, more than one dipole magnets (x32), in particular four dipole magnets (x32), may be used instead of one dipole magnet. (x32). When more than one dipole magnets (x32) are used, said more than one dipole magnets (x32) are preferably placed on top of each other. The diameter of said more than one dipole magnets (x32) may be the same or may be different. The thickness of said more than one dipole magnets (x32) may be the same or may be different.

[0110] Fig. 4A, 5A-B and 6A schematically depict cross-sections of a soft magnetic plate (x31) comprising a void (V) having a depth of less than 100%, i.e. the one or more voids (V), preferably the one or more loop-shaped void(s), described herein are in the form of recesses, wherein said soft

magnetic plate (x31) comprises one or more indentations (I) (e.g. a single loop-shaped indentation (I) or two indentations (I), Fig. 4A and 5A-B) or one or more protrusions (P) (e.g. a single loop-shaped protrusion (P) or two protrusions (P), Fig. 4B and 6A).

[0111] Fig. 5C-F and 6B-C schematically depict cross-sections of a soft magnetic plate (x31) comprising a void (V) having a depth of 100%, i.e. the one or more voids (V), preferably the one or more loop-shaped void(s), described herein, are in the form of holes or channels, wherein said soft magnetic plate (x31) comprises one or more indentations (I) (e.g. a single loop-shaped indentation (I) or two indentations (I), Fig. 5C-F) or one or more protrusions (P) (e.g. a single loop-shaped protrusion (P) or two protrusions (P), Fig. 6B-C).

[0112] The soft magnetic plate (x31) described herein is characterized by a top surface, wherein said top surface consists of the surface onto which a substrate (x20) carrying a coating layer (x10) will be placed in direct contact or in indirect contact. As shown for example in Fig. 4A and 5A-D, the top surface (TS, dotted line) of a soft magnetic plate (x31) comprising the one or more indentations (I) described herein consists of the top surface of the plate itself. As shown for example in Fig. 4B and 6A-B, the top surface (TS, dotted line) of a soft magnetic plate (x31) comprising the one or more protrusions (P) described herein consists of the top surface of the one or more protrusions (P). The top surface of a soft magnetic plate (x31) comprising the one or more indentations (I) and the one or more protrusions (P) consists of the top surface of the one or more protrusions (P).

[0113] According to one embodiment, the magnetic assembly (x30) described herein comprises i) the soft magnetic plate (x31) described herein comprising the one or more voids (V), preferably the one or more loop-shaped voids (V), described herein and the one or more indentations (I) described herein, and ii) the one or more dipole magnets (x32) described herein, wherein the top surface of the one or more dipole magnets (x32) is either flush with the top surface of the soft magnetic plate (x31) (see for example Fig. 5A and 5C-D) or is below the top surface of the soft magnetic plate (x31) (see for examples Fig. 5B and 5E-F), preferably wherein the top surface of the one or more dipole magnets (x32) is flush with the top surface of the soft magnetic plate (x31).

[0114] According to one embodiment, the magnetic assembly (x30) described herein comprises i) the soft magnetic plate (x31) described herein comprising the one or more voids (V), preferably the one or more loop-shaped void(s), described herein and the one or more protrusions (P) described herein, and ii) one or more dipole magnets (x32), wherein the top surface of the one or more dipole magnets (x32) is preferably flush with the top surface of the soft magnetic plate (x31) (see for example Fig. 6A-C).

[0115] According to one embodiment, the magnetic assembly (x30) described herein comprises i) the soft magnetic plate (x31) described herein comprising the one or more voids (V), preferably the one or more loop-shaped void(s), described herein, the one or more indentations (I) described herein and the one or more protrusions (P) described herein, and ii) one or more dipole magnets (x32), wherein the top surface of the one or more dipole magnets (x32) is preferably flush with the top surface of the soft magnetic plate (x31).

[0116] According to one embodiment and as shown in Fig. 4A and 5A-B, the magnetic assembly (x30) described herein comprises i) the soft magnetic plate (x31) comprising the one or more voids (V), preferably the one or more loop-shaped voids, described herein, having a depth of less than

100% described herein and the one or more indentations (I) described herein and ii) the one or more dipole magnets (x32) described herein, wherein said one or more dipole magnets (x32) are disposed symmetrically or non-symmetrically within the one or more voids (V), preferably within the loop defined by the one or more loop-shaped voids (V), described herein and wherein the top surface of said one or more dipole magnets (x32) is a) flush with the top surface (dotted line) of the soft magnetic plate (x31) preferably with the bottom surface of said one or more dipole magnets (x32) being flush with the top surface of the one or more voids (V) of the soft magnetic plate (x31) (see Fig. 5A), or b) below the top surface (dotted line) of the soft magnetic plate (x31) preferably with the bottom surface of said one or more dipole magnets (x32) being flush with the top surface of the one or more voids (V) of the soft magnetic plate (x31) (see Fig. 5B).

[0117] According to one embodiment and as shown in Fig. 4B and 6A, the magnetic assembly (x30) described herein comprises i) the soft magnetic plate (x31) comprising the one or more voids (V), preferably the one or more loop-shaped voids, described herein, having a depth of less than 100% described herein and the one or more protrusions (P) described herein and ii) the one or more dipole magnets (x32) described herein, wherein said one or more dipole magnets (x32) are disposed symmetrically or non-symmetrically within the one or more voids (V), preferably within the loop defined by the one or more loop-shaped voids (V) and wherein the top surface of said one or more magnets (x32) is flush with the top surface (dotted line) of the soft magnetic plate (x31) preferably with the bottom surface of said one or more dipole magnets (x32) being flush with the top surface of the one or more voids (V) of the soft magnetic plate (x31).

[0118] According to one embodiment and as shown in Fig. 5C-F, the magnetic assembly (x30) described herein comprises i) the soft magnetic plate (x31) comprising the one or more loop-shaped voids (V) having a depth of 100% described herein and the one or more loop-shaped indentations (I) described herein and ii) the one or more dipole magnets (x32) described herein, wherein said one or more dipole magnets (x32) are disposed symmetrically or non-symmetrically within the one or more voids (V), preferably within the loop defined by the one or more loop-shaped voids (V), described herein and wherein the top surface of said one or more dipole magnets (x32) is a) flush with the top surface (dotted line) of the soft magnetic plate (x31) and the bottom surface of said one or more dipole magnets (x32) being either flush with the bottom of the soft magnetic plate (x31) (see Fig. 5C) or being below the soft magnetic plate (x31) (see Fig. 5D), or b) below the top surface (dotted line) of the soft magnetic plate (x31) with the bottom surface of said one or more dipole magnets (x32) being either flush with the bottom of the soft magnetic plate (x31) (see Fig. 5E) or being below the soft magnetic plate (x31) (see Fig. 5F).

[0119] According to one embodiment and as shown in Fig. 6B-C, the magnetic assembly (x30) described herein comprises i) the soft magnetic plate (x31) comprising the one or more loop-shaped voids (V) having a depth of 100% described herein and the one or more loop-shaped protrusions (P) described herein and ii) the one or more dipole magnets (x32) described herein, wherein said one or more dipole magnets (x32) are disposed symmetrically or non-symmetrically within the one or more voids (V), preferably within the loop defined by the one or more loop-shaped voids (V), described herein and wherein the top surface of said one or more dipole magnets (x32) is flush with the top

surface (dotted line) of the soft magnetic plate (x31) with the bottom surface of said one or more dipole magnets (x32) being either flush with the bottom surface of the soft magnetic plate (x31) (see Fig. 6B) or being below the soft magnetic plate (x31) (see Fig. 6C).

[0120] The soft magnetic plate (x31) described herein may additionally be surface-treated for facilitating the contact with substrate (x20) carrying the coating layer (x10) described herein, reducing friction and/or wear and/or electrostatic charging in a high-speed printing applications.

[0121] According to one embodiment, the soft magnetic plate (x31) described herein is flat or planar. According to another embodiment, the soft magnetic plate (x31) described herein is curved so as to be adaptable in or on a rotating cylinder of printing assemblies. The rotating cylinder is meant to be used in, or in conjunction with, or being part of a printing or coating equipment, and bearing one or more soft magnetic plates described herein. In an embodiment, the rotating cylinder is part of a rotary, sheet-fed or web-fed industrial printing press that operates at high printing speed in a continuous way.

[0122] The soft magnetic plate (x31) described herein may either be a plate comprising one or more soft magnetic metals, alloys or compounds of high magnetic permeability (or a plate made of a composite comprising soft magnetic particles dispersed in a non-magnetic material (hereafter referred as “soft magnetic composite plate”).

[0123] According to one embodiment, the soft magnetic plate (x31) described herein comprises one or more soft magnetic metals, alloys or compounds of high magnetic permeability (hereafter referred as “soft magnetic metal plate”). Soft magnetic materials have a low coercivity and a high saturation magnetization. Suitable low-coercivity, high-saturation materials have a coercivity lower than 1000 Am^{-1} as measured according to IEC 60404-1:2000, to allow for a fast magnetization and demagnetization, and their saturation magnetization is preferably at least 1 Tesla, more preferably at least 1.5 Tesla, and even more preferably at least 2 Tesla. Soft magnetic materials are described, for example, in the following handbooks: (1) Handbook of Condensed Matter and Materials Data, Chap. 4.3.2, Soft Magnetic Materials, p. 758-793, and Chap. 4.3.4, Magnetic Oxides, p. 811-813, Springer 2005; (2) Ferromagnetic Materials, Vol. 1, Iron, Cobalt and Nickel, p. 1-70, Elsevier 1999; (3) Ferromagnetic Materials, Vol. 2, Chap. 2, Soft Magnetic Metallic Materials, p. 55-188, and Chap. 3, Ferrites for non-microwave Applications, p. 189-241, Elsevier 1999; (4) Electric and Magnetic Properties of Metals, C. Moosbrugger, Chap. 8, Magnetically Soft Materials, p. 196-209, ASM International, 2000; (5) Handbook of modern Ferromagnetic Materials, Chap. 9, High-permeability High-frequency Metal Strip, p. 155-182, Kluwer Academic Publishers, 2002; and (6) Smithells Metals Reference Book, Chap. 20.3, Magnetically Soft Materials, p. 20-9 – 20-16, Butterworth-Heinemann Ltd, 1992. High magnetic permeability materials are preferably materials having a magnetic permeability of more than 1.0×10^{-2} H/m.

[0124] According to one embodiment, the soft magnetic metal plate (x31) described herein is made of one or more soft magnetic metals or alloys easily workable as sheets or threads. Preferably, the soft magnetic metal plate (x31) described herein is made from one or more materials selected from the group consisting of iron, cobalt, nickel, nickel-molybdenum alloys, nickel-iron alloys (permalloy or supermalloy-type materials), cobalt-iron alloys, cobalt-nickels alloys iron-nickel-cobalt alloys (Fernico-type materials), Heusler-type alloys (such as Cu_2MnSn or Ni_2MnAl), low silicon steels, low carbon

steels, silicon irons (electrical steels), iron-aluminum alloys, iron-aluminum-silicon alloys, amorphous metal alloys (e.g. alloys like Metglas®, iron-boron alloys), nanocrystalline soft magnetic materials (e.g. Vitroperm®) and combinations thereof, more preferably selected from the group consisting of iron, cobalt, nickel, low carbon steels, silicon iron, nickel-iron alloys and cobalt-iron alloys and combinations thereof.

[0125] The soft magnetic metal plate described herein has preferably a thickness between about 10 μm and about 3000 μm, more preferably between about 50 μm and about 2000 μm, still more preferably between about 500 μm and about 2000 μm, and even more preferably between about 1000 μm and about 2000 μm. As described hereabove, the thickness of a soft magnetic metal plate comprising one or more voids (V) and one or more indentations (I) refers to the thickness of the regions of the soft magnetic metal plate lacking the one or more voids (V) and lacking the one or more indentations (I) (see Fig. 4A) and the thickness of a soft magnetic metal plate comprising one or more protrusions (P) refers to the total thickness of the soft magnetic metal plate, i.e. the combination of the height of the highest protrusions of the one or more protrusions and the thickness of the regions of the soft magnetic metal plate lacking said one or more protrusions (see Fig. 4B). The low magnetic permeability of the soft magnetic metal plate allows working with thicknesses described herein and thus allowing the mechanical strength of the plate to be preserved.

[0126] According to one embodiment, the soft magnetic metal plate described herein comprises the one or more voids (V), preferably the one or more loop-shaped void(s), described herein and having a depth of 100%. According to another embodiment, the soft magnetic metal plate described herein comprises the one or more voids (V), preferably the one or more loop-shaped void(s), described herein and having a depth of less than 100%; i.e. recesses or indentations, preferably a depth between about 20% and about 90% of the thickness of the soft magnetic metal plate, more preferably between about 30% and about 90% in comparison with the thickness of the soft magnetic metal plate, and still more preferably between about 50% and about 90% in comparison with the thickness of the soft magnetic metal plate.

[0127] The soft magnetic metal plate described herein comprises the one or more indentations (I) described herein and and/or the one or more protrusions (P) described herein and, wherein

according to one embodiment, the one or more indentations (I) have a depth preferably between about 20% and about 100% in comparison with the thickness of the soft magnetic metal plate, more preferably between about 30% and about 100% in comparison with the thickness of the soft magnetic metal plate, and still more preferably between about 50% and about 100% in comparison with the thickness of the soft magnetic metal plate; according to another embodiment the one or more loop-shaped indentations (I) have a depth preferably between about 20% and about 90% in comparison with the thickness of the soft magnetic metal plate, more preferably between about 30% and about 90% in comparison with the thickness of the soft magnetic metal plate, and still more preferably between about 50% and about 90% in comparison with the thickness of the soft magnetic metal plate, and/or

the one or more protrusions (P) have a height preferably between about 20% and about 100% in comparison with the thickness of the soft magnetic metal plate, more preferably between about 30%

and about 100% in comparison with the thickness of the soft magnetic metal plate, and still more preferably between about 50% and about 100% in comparison with the thickness of the soft magnetic metal plate.

[0128] The soft magnetic metal plate described herein may be arranged on a non-magnetic holder or spacer (x33). Typically, said non-magnetic holder or spacer (x33), for instance a non-magnetic metal plate, may be made of one of the polymeric matrix materials described herein. For example, a soft magnetic metal plate comprising the one or more voids (V) described herein and having a depth of 100% may be arranged on said non-magnetic holder or spacer (x33). For example, a soft magnetic metal plate comprising the one or more protrusions (P) described herein and having a height of 100% may be arranged on said non-magnetic holder or spacer (x33).

[0129] The one or more voids (V), preferably the one or more loop-shaped void(s), described herein, as well as the one or more indentations (I) and/or the one or more protrusions (P) of the soft magnetic metal plate described herein may be produced by any cutting or engraving methods known in the art including without limitation casting, molding, hand-engraving or ablation tools selected from the group consisting of mechanical ablation tools, gaseous or liquid jet ablation tools, by chemical etching, electro-chemical etching and laser ablation tools (e.g. CO^{2-}, Nd-YAG or excimer lasers).

[0130] According to another embodiment, the soft magnetic plate (x31) described herein is made of a composite comprising from about 25 wt-% to about 95 wt-% of soft magnetic particles dispersed in a non-magnetic material, the weight percents being based on the total weight of the soft magnetic plate (x31). Preferably, the composite of the soft magnetic composite plate comprises from about 50 wt-% to about 90 wt-%, of soft magnetic particles, the weight percents being based on the total weight of the soft magnetic composite plate. The soft magnetic particle described herein is made of one or more soft magnetic materials preferably selected from the group consisting of iron (especially iron pentacarbonyl, also called carbonyl iron), nickel (especially nickel tetracarbonyl, also called carbonyl nickel), cobalt, soft magnetic ferrites (e.g. manganese-zinc ferrites and nickel-zinc ferrites), soft magnetic oxides (e.g. oxides of manganese, iron, cobalt and nickel) and combinations thereof, more preferably selected from the group consisting of carbonyl iron, carbonyl nickel, cobalt and combinations thereof.

[0131] The soft magnetic particles may have a needle-like shape, a platelet-like shape or a spherical shape. Preferably, the soft magnetic particles have a spherical shape so as to maximize the saturation of the one or more soft magnetic composite plates and have the highest possible concentration without losing the cohesion of the soft magnetic composite plate. Preferably, the soft magnetic particles have a spherical shape and have an average particle size (d_{50}) between about 0.1 μm and about 1000 μm, more preferably between about 0.5 μm and about 100 μm, still more preferably between about 1 μm and 20 about μm, and even more preferably between 2 about μm and 10 about μm, d_{50} being measured by laser diffraction using for example a microtrac X100 laser particle size analyzer.

[0132] The soft magnetic composite plate described herein is made of a composite, wherein said composite comprises the soft magnetic particles described herein dispersed in a non-magnetic material. Suitable non-magnetic materials include without limitation polymeric materials forming a

matrix for the dispersed soft magnetic particles. The polymeric matrix-forming materials may be one or more thermoplastic materials or one or more thermosetting materials or comprise one or more thermoplastic materials or one or more thermosetting materials. Suitable thermoplastic materials include without limitation polyamides, co-polyamides, polyphtalimides, polyolefins, polyesters, polytetrafluoroethylenes, polyacrylates, polymethacrylates (e.g. PMMA), polyimides, polyetherimides, polyetheretherketones, polyaryletherketones, polyphenylene sulfides, liquid crystal polymers, polycarbonates and mixtures thereof. Suitable thermosetting materials include without limitation epoxy resins, phenolic resins, polyimide resins, polyester resins, silicon resins and mixtures thereof. The one or more soft magnetic plates described herein are made of a composite comprising from about 5 wt-% to about 75 wt-% of the non-magnetic material described herein, the weight percents being based on the total weight of the soft magnetic composite plate.

[0133] The composite described herein may further comprise one or more additives such as for example hardeners, dispersants, plasticizers, fillers/extenders and defoamers.

[0134] The soft magnetic composite plate described herein preferably has a thickness of at least about 0.5 mm, more preferably at least about 1 mm and still more preferably between about 1 mm and about 5 mm. As described hereabove, the thickness of a soft magnetic composite plate comprising the one or more loop-shaped voids (V) described herein refers to the thickness of the regions of the soft magnetic composite plate lacking the one or more loop-shaped voids (V) and the thickness of a soft magnetic composite plate comprising the one or more protrusions (P) described herein refers to the total thickness of the soft magnetic composite plate, i.e. the combination of the height of the highest protrusions of the one or more protrusions and the thickness of the regions of the soft magnetic composite plate lacking said one or more protrusions.

[0135] According to one embodiment, the soft magnetic composite plate described herein comprises the one or more voids (V), preferably the one or more loop-shaped void(s), described herein and having a depth preferably between about 5% and about 100% in comparison with the thickness of the soft magnetic composite plate, more preferably between about 10% and about 100% in comparison with the thickness of the soft magnetic composite plate, and still more preferably between about 50% and about 100% in comparison with the thickness of the soft magnetic composite plate.

[0136] According to one embodiment, the soft magnetic composite plate described herein comprises the one or more voids (V), preferably the one or more loop-shaped void(s), described herein and having a depth of 100%. According to another embodiment, the soft magnetic composite plate described herein comprises the one or more voids (V), preferably the one or more loop-shaped void(s), described herein and having a depth of less than 100%; i.e. recesses or indentations, preferably a depth between about 5% and about 90% of the thickness of the soft magnetic composite plate, more preferably between about 10% and about 90% in comparison with the thickness of the soft magnetic composite plate, and still more preferably between about 50% and about 90% in comparison with the thickness of the soft magnetic composite plate.

[0137] The soft magnetic composite plate described herein comprises the one or more indentations (I) described herein and and/or the one or more protrusions (P) described herein and, wherein

according to one embodiment the one or more indentations (I) have a depth preferably between about 5% and about 100% in comparison with the thickness of the soft magnetic composite plate, more preferably between about 10% and about 100% in comparison with the thickness of the soft magnetic composite plate, and still more preferably between about 50% and about 100% in comparison with the thickness of the soft magnetic composite plate; according to another embodiment the one or more indentations (I) have a depth preferably between about 5% and about 90% in comparison with the thickness of the soft magnetic composite plate, more preferably between about 10% and about 90% in comparison with the thickness of the soft magnetic composite plate, and still more preferably between about 50% and about 90% in comparison with the thickness of the soft magnetic composite plate, and/or the

one or more protrusions (P) have a height preferably between about 5% and about 100% in comparison with the thickness of the soft magnetic composite plate, more preferably between about 10% and about 100% in comparison with the thickness of the soft magnetic metal plate, and still more preferably between about 50% and about 100% in comparison with the thickness of the soft magnetic metal plate.

[0138] The soft magnetic composite plate described herein may be arranged on a non-magnetic holder or spacer (x33). Typically, said non-magnetic holder or spacer (x33), for instance a non-magnetic metal plate, may be made of one the polymeric matrix materials described herein. For example, a soft magnetic composite plate comprising one or more voids having a depth of 100% may be arranged on said non-magnetic holder or spacer (x33). For example, a soft magnetic composite plate comprising the one or more protrusions (P) described herein and having a height of 100% may be arranged on said non-magnetic holder or spacer (x33).

[0139] The present invention advantageously uses the soft magnetic composite plates described herein since said plates may be easily produced and treated like any other polymer material. Techniques well-known in the art including 3D printing, lamination molding, compression molding, resin transfer molding or injection molding may be used. After molding, standard curing procedures may be applied, such as cooling down (when thermoplastic polymers are used) or curing at high or low temperature (when thermosetting polymers are used). Another way to obtain the one or more soft magnetic composite plates described herein is to remove parts of them to get the required one or more voids (V) and/or indentations (I) and/or protrusions (P) using standard tools to work out plastic parts. Especially, mechanical ablation tools may be advantageously used.

[0140] The distance (h) between the top surface of the soft magnetic plate (x31) of the magnetic assembly (x30) described herein and the substrate (x20) carrying the coating layer (x10) is adjusted and selected to obtain the desired bright and highly resolved optical effect layers exhibiting a dynamic effect. It is particularly preferred to use a distance between the top surface of the soft magnetic plate (x31) and the substrate (x20) close to zero or being zero.

[0141] The substrate (x20) carrying the coating layer (x10) is exposed to the magnetic field of the magnetic assembly (x30) described herein so that the platelet-shaped magnetic or magnetizable pigment particles are oriented while the coating layer/composition is still in a wet (i.e. not yet hardened) state.

[0142] The process for producing the OEL described herein may further comprise prior to or simultaneously with step b) a step (step b2)) of exposing the coating layer (x10) to a dynamic magnetic field of a device so as to bi-axially orient at least a part of the platelet-shaped magnetic or magnetizable pigment particles, said step being carried out prior to or simultaneously with step b) and before step c). Processes comprising such a step of exposing a coating composition to a dynamic magnetic field of a device so as to bi-axially orient at least a part of the platelet-shaped magnetic or magnetizable pigment particles are disclosed in WO 2015/ 086257 A1. Subsequently to the exposure of the coating layer (x10) to the magnetic field of the magnetic assembly (x30) described herein and while the coating layer (x10) is still wet or soft enough so that the platelet-shaped magnetic or magnetizable pigment particles therein can be further moved and rotated, the platelet-shaped magnetic or magnetizable pigment particles are further re-oriented by the use of the device described herein. Carrying out a bi-axial orientation means that platelet-shaped magnetic or magnetizable pigment particles are made to orientate in such a way that their two main axes are constrained. That is, each platelet-shaped magnetic or magnetizable pigment particle can be considered to have a major axis in the plane of the pigment particle and an orthogonal minor axis in the plane of the pigment particle. The major and minor axes of the platelet-shaped magnetic or magnetizable pigment particles are each caused to orient according to the dynamic magnetic field. Effectively, this results in neighboring platelet-shaped magnetic pigment particles that are close to each other in space to be essentially parallel to each other. In order to perform a bi-axial orientation, the platelet-shaped magnetic pigment particles must be subjected to a strongly time-dependent external magnetic field.

[0143] Particularly preferred devices for bi-axially orienting the platelet-shaped magnetic or magnetizable pigment particles are disclosed in EP 2 157 141 A1. The device disclosed in EP 2 157 141 A1 provides a dynamic magnetic field that changes its direction forcing the platelet-shaped magnetic or magnetizable pigment particles to rapidly oscillate until both main axes, X-axis and Y-axis, become substantially parallel to the substrate surface, i.e. the platelet-shaped magnetic or magnetizable pigment particles rotate until they come to the stable sheet-like formation with their X and Y axes substantially parallel to the substrate surface and are planarized in said two dimensions. Other particularly preferred devices for bi-axially orienting the platelet-shaped magnetic or magnetizable pigment particles comprise linear permanent magnet Halbach arrays, i.e. assemblies comprising a plurality of magnets with different magnetization directions. Detailed description of Halbach permanent magnets was given by Z.Q. Zhu and D. Howe (Halbach permanent magnet machines and applications: a review, IEE. Proc. Electric Power Appl., 2001, 148, p. 299-308). The magnetic field produced by such a Halbach array has the properties that it is concentrated on one side while being weakened almost to zero on the other side. WO 2016/083259 A1 discloses suitable devices for bi-axially orienting platelet-shaped magnetic or magnetizable pigment particles, wherein said devices comprise a Halbach cylinder assembly. Other particularly preferred for bi-axially orienting the platelet-shaped magnetic or magnetizable pigment particles are spinning magnets, said magnets comprising disc-shaped spinning magnets or magnetic assemblies that are essentially magnetized along their diameter. Suitable spinning magnets or magnetic assemblies are described in US 2007/0172261 A1, said spinning magnets or magnetic assemblies generate radially symmetrical time-

variable magnetic fields, allowing the bi-orientation of platelet-shaped magnetic or magnetizable pigment particles of a not yet cured or hardened coating composition. These magnets or magnetic assemblies are driven by a shaft (or spindle) connected to an external motor. CN 102529326 B discloses examples of devices comprising spinning magnets that might be suitable for bi-axially orienting platelet-shaped magnetic or magnetizable pigment particles. In a preferred embodiment, suitable devices for bi-axially orienting platelet-shaped magnetic or magnetizable pigment particles are shaft-free disc-shaped spinning magnets or magnetic assemblies constrained in a housing made of non-magnetic, preferably non-conducting, materials and are driven by one or more magnet-wire coils wound around the housing. Examples of such shaft-free disc-shaped spinning magnets or magnetic assemblies are disclosed in WO 2015/082344 A1, WO 2016/026896 A1 and in the co-pending European application 17153905.9.

[0144] The process for producing the OEL described herein comprises, a step of hardening (step c)) the coating composition, wherein said step c) is carried out preferably partially simultaneously with step b) or partially simultaneously with step b2) if a said second orientation step b2) is carried out. The step of hardening the coating composition allows the platelet-shaped magnetic or magnetizable pigment particles to be fixed in their adopted positions and orientations in a desired pattern to form the OEL, thereby transforming the coating composition to a second state. However, the time from the end of step b) to the beginning of step c) is preferably relatively short in order to avoid any de-orientation and loss of information. Typically, the time between the end of step b) and the beginning of step c) is less than 1 minute, preferably less than 20 seconds, further preferably less than 5 seconds. It is particularly preferable that there is essentially no time gap between the end of the orientation step b) (or step b2) if a second orientation step is carried out) and the beginning of the hardening step c), i.e. that step c) follows immediately after step b) or already starts while step b) is still in progress (partially simultaneously). By “partially simultaneously”, it is meant that both steps are partly performed simultaneously, i.e. the times of performing each of the steps partially overlap. In the context described herein, when hardening is performed partially simultaneously with the step b) (or step b2)) if a second orientation step is carried out), it must be understood that hardening becomes effective after the orientation so that the platelet-shaped magnetic or magnetizable pigment particles orient before the complete or partial hardening of the OEL. As mentioned herein, the hardening step (step c)) may be performed by using different means or processes depending on the binder material comprised in the coating composition that also comprises the platelet-shaped magnetic or magnetizable pigment particles.

[0145] The hardening step generally may be any step that increases the viscosity of the coating composition such that a substantially solid material adhering to the substrate is formed. The hardening step may involve a physical process based on the evaporation of a volatile component, such as a solvent, and/or water evaporation (i.e. physical drying). Herein, hot air, infrared or a combination of hot air and infrared may be used. Alternatively, the hardening process may include a chemical reaction, such as a curing, polymerizing or cross-linking of the binder and optional initiator compounds and/or optional cross-linking compounds comprised in the coating composition. Such a chemical reaction may be initiated by heat or IR irradiation as outlined above for the physical hardening processes, but

may preferably include the initiation of a chemical reaction by a radiation mechanism including without limitation Ultraviolet-Visible light radiation curing (hereafter referred as UV-Vis curing) and electronic beam radiation curing (E-beam curing); oxypolymerization (oxidative reticulation, typically induced by a joint action of oxygen and one or more catalysts preferably selected from the group consisting of cobalt-containing catalysts, vanadium-containing catalysts, zirconium-containing catalysts, bismuth-containing catalysts and manganese-containing catalysts); cross-linking reactions or any combination thereof.

[0146] Radiation curing is particularly preferred, and UV-Vis light radiation curing is even more preferred, since these technologies advantageously lead to very fast curing processes and hence drastically decrease the preparation time of any article comprising the OEL described herein. Moreover, radiation curing has the advantage of producing an almost instantaneous increase in viscosity of the coating composition after exposure to the curing radiation, thus minimizing any further movement of the particles. In consequence, any loss of orientation after the magnetic orientation step can essentially be avoided. Particularly preferred is radiation-curing by photo-polymerization, under the influence of actinic light having a wavelength component in the UV or blue part of the electromagnetic spectrum (typically 200 nm to 650 nm; more preferably 200 nm to 420 nm). Equipment for UV-visible-curing may comprise a high-power light-emitting-diode (LED) lamp, or an arc discharge lamp, such as a medium-pressure mercury arc (MPMA) or a metal-vapor arc lamp, as the source of the actinic radiation.

[0147] According to one embodiment, the process for producing the OEL described herein comprises the hardening step c) being a radiation curing step, preferably a UV-Vis light radiation curing step and using a photomask comprising one or more windows. Example of methods using photomasks are disclosed in WO 02/090002 A2. The photomask comprising one or more windows is positioned between the coating layer (x10) and the radiation source, thereby allowing the orientation of the platelet-shaped magnetic or magnetizable pigment particles described herein to be fixed/frozen only in the one or more regions placed under the one or more windows. The platelet-shaped magnetic or magnetizable pigment particles dispersed in the un-exposed parts of the coating layer (x10) may be re-oriented, in a subsequent step, using a second magnetic field.

[0148] The process comprising the hardening step c) being the radiation curing step, preferably the UV-Vis light radiation curing step and using the photomask described herein further comprises a step d) of exposing the coating layer (x10) to the magnetic field of a magnetic-field-generating device thereby orienting the platelet-shaped magnetic or magnetizable pigment particles in one or more regions of the coating layer (x10) which are in the first state due to the presence of the one or more regions of the photomask lacking the one or more windows, wherein said magnetic-field-generating device allow the magnetic orientation of the pigment particles so as to follow any orientation pattern except a random orientation. The devices described herein for bi-axially orienting the platelet-shaped magnetic or magnetizable pigment particles may be used for the second orientation step (step d)). The process comprising the hardening step c) being the radiation curing step, preferably the UV-Vis light radiation curing step and using the photomask described herein further and the step d) described herein further comprises a step e) of simultaneously, partially simultaneously or subsequently,

preferably simultaneously or partially simultaneously, hardening the coating layer (x10) so as to fix or freeze the magnetic or magnetizable pigment particles in their adopted positions and orientations such as described hereabove.

[0149] The present invention provides a process to produce an optical effect layer (OEL) on a substrate. The substrate (x20) described herein is preferably selected from the group consisting of papers or other fibrous materials (including woven and non-woven fibrous materials), such as cellulose, paper-containing materials, glasses, metals, ceramics, plastics and polymers, metallized plastics or polymers, composite materials and mixtures or combinations of two or more thereof. Typical paper, paper-like or other fibrous materials are made from a variety of fibers including without limitation abaca, cotton, linen, wood pulp, and blends thereof. As is well known to those skilled in the art, cotton and cotton/linen blends are preferred for banknotes, while wood pulp is commonly used in non-banknote security documents. Typical examples of plastics and polymers include polyolefins such as polyethylene (PE) and polypropylene (PP) including biaxially oriented polypropylene (BOPP), polyamides, polyesters such as poly(ethylene terephthalate) (PET), poly(1,4-butylene terephthalate) (PBT), poly(ethylene 2,6-naphthoate) (PEN) and polyvinylchlorides (PVC). Spunbond olefin fibers such as those sold under the trademark Tyvek® may also be used as substrate. Typical examples of metalized plastics or polymers include the plastic or polymer materials described hereabove having a metal disposed continuously or discontinuously on their surface. Typical example of metals include without limitation aluminum (Al), chromium (Cr), copper (Cu), gold (Au), silver (Ag), alloys thereof and combinations of two or more of the aforementioned metals. The metallization of the plastic or polymer materials described hereabove may be done by an electrodeposition process, a high-vacuum coating process or by a sputtering process. Typical examples of composite materials include without limitation multilayer structures or laminates of paper and at least one plastic or polymer material such as those described hereabove as well as plastic and/or polymer fibers incorporated in a paper-like or fibrous material such as those described hereabove. Of course, the substrate can comprise further additives that are known to the skilled person, such as fillers, sizing agents, whiteners, processing aids, reinforcing or wet strengthening agents, etc. When the OELs produced according to the present invention are used for decorative or cosmetic purposes including for example fingernail lacquers, said OEL may be produced on other type of substrates including nails, artificial nails or other parts of an animal or human being.

[0150] Should the OEL produced according to the present invention be on a security document, and with the aim of further increasing the security level and the resistance against counterfeiting and illegal reproduction of said security document, the substrate may comprise printed, coated, or laser-marked or laser-perforated indicia, watermarks, security threads, fibers, planchettes, luminescent compounds, windows, foils, decals and combinations of two or more thereof. With the same aim of further increasing the security level and the resistance against counterfeiting and illegal reproduction of security documents, the substrate may comprise one or more marker substances or taggants and/or machine readable substances (e.g. luminescent substances, UV/visible/IR absorbing substances, magnetic substances and combinations thereof).

[0151] If desired, a primer layer may be applied to the substrate prior to the step a). This may

enhance the quality of the optical effect layer (OEL) described herein or promote adhesion. Examples of such primer layers may be found in WO 2010/058026 A2.

[0152] With the aim of increasing the durability through soiling or chemical resistance and cleanliness and thus the circulation lifetime of an article, a security document or a decorative element or object comprising the optical effect layer (OEL) obtained by the process described herein, or with the aim of modifying their aesthetical appearance (e.g. optical gloss), one or more protective layers may be applied on top of the optical effect layer (OEL). When present, the one or more protective layers are typically made of protective varnishes. These may be transparent or slightly colored or tinted and may be more or less glossy. Protective varnishes may be radiation curable compositions, thermal drying compositions or any combination thereof. Preferably, the one or more protective layers are radiation curable compositions, more preferable UV-Vis curable compositions. The protective layers are typically applied after the formation of the optical effect layer (OEL).

[0153] The present invention further provides optical effect layers (OEL) produced by the process according to the present invention.

[0154] The optical effect layer (OEL) described herein may be provided directly on a substrate on which it shall remain permanently (such as for banknote applications). Alternatively, an optical effect layer (OEL) may also be provided on a temporary substrate for production purposes, from which the OEL is subsequently removed. This may for example facilitate the production of the optical effect layer (OEL), particularly while the binder material is still in its fluid state. Thereafter, after hardening the coating composition for the production of the optical effect layer (OEL), the temporary substrate may be removed from the OEL.

[0155] Alternatively, in another embodiment an adhesive layer may be present on the optical effect layer (OEL) or may be present on the substrate comprising OEL, said adhesive layer being on the side of the substrate opposite to the side where the OEL is provided or on the same side as the OEL and on top of the OEL. Therefore an adhesive layer may be applied to the optical effect layer (OEL) or to the substrate, said adhesive layer being applied after the curing step has been completed. Such an article may be attached to all kinds of documents or other articles or items without printing or other processes involving machinery and rather high effort. Alternatively, the substrate described herein comprising the optical effect layer (OEL) described herein may be in the form of a transfer foil, which can be applied to a document or to an article in a separate transfer step. For this purpose, the substrate is provided with a release coating, on which the optical effect layer (OEL) are produced as described herein. One or more adhesive layers may be applied over the so produced optical effect layer (OEL).

[0156] Also described herein are substrates comprising more than one, i.e. two, three, four, etc. optical effect layers (OEL) obtained by the process described herein.

[0157] Also described herein are articles, in particular security documents, decorative elements or objects, comprising the optical effect layer (OEL) produced according to the present invention. The articles, in particular security documents, decorative elements or objects, may comprise more than one (for example two, three, etc.) OELs produced according to the present invention.

[0158] As mentioned hereabove, the optical effect layer (OEL) produced according to the present invention may be used for decorative purposes as well as for protecting and authenticating a security document.

[0159] Typical examples of decorative elements or objects include without limitation luxury goods, cosmetic packaging, automotive parts, electronic/electrical appliances, furniture and fingernail articles.

[0160] Security documents include without limitation value documents and value commercial goods. Typical example of value documents include without limitation banknotes, deeds, tickets, checks, vouchers, fiscal stamps and tax labels, agreements and the like, identity documents such as passports, identity cards, visas, driving licenses, bank cards, credit cards, transactions cards, access documents or cards, entrance tickets, public transportation tickets or titles and the like, preferably banknotes, identity documents, right-conferring documents, driving licenses and credit cards. The term “value commercial good” refers to packaging materials, in particular for cosmetic articles, nutraceutical articles, pharmaceutical articles, alcohols, tobacco articles, beverages or foodstuffs, electrical/electronic articles, fabrics or jewelry, i.e. articles that shall be protected against counterfeiting and/or illegal reproduction in order to warrant the content of the packaging like for instance genuine drugs. Examples of these packaging materials include without limitation labels, such as authentication brand labels, tamper evidence labels and seals. It is pointed out that the disclosed substrates, value documents and value commercial goods are given exclusively for exemplifying purposes, without restricting the scope of the invention.

[0161] Alternatively, the optical effect layer (OEL) may be produced onto an auxiliary substrate such as for example a security thread, security stripe, a foil, a decal, a window or a label and consequently transferred to a security document in a separate step.

[0162] The skilled person can envisage several modifications to the specific embodiments described above without departing from the spirit of the present invention. Such modifications are encompasses by the present invention.

[0163] Further, all documents referred to throughout this specification are hereby incorporated by reference in their entirety as set forth in full herein.

EXAMPLES

[0164] A black commercial paper (Gascogne Laminates M-cote 120) was used as substrate (x20) for the examples described hereafter.

[0165] The UV-curable screen printing ink described in Table 1 was used as a coating composition comprising platelet-shaped optically variable magnetic pigment particles so as to form a coating layer (x20). The coating composition was applied on the substrate (x20) (40 x 30 mm), said application being carried out by hand screen printing using a T90 screen so as to form a coating layer (x10) (30 x 20 mm) having a thickness of about 20 μm.

Table 1

Epoxyacrylate oligomer	36%
Trimethylolpropane triacrylate monomer	13.5%
Tripropyleneglycol diacrylate monomer	20%
Genorad™ 16 (Rahn)	1%
Aerosil® 200 (Evonik)	1%
Speedcure TPO-L (Lambson)	2%
IRGACURE® 500 (BASF)	6%
Genocure EPD (Rahn)	2%
Tego® Foamex N (Evonik)	2%
Platelet-shaped optically variable magnetic pigment particles (7 layers)(*)	16.5%

(*) gold-to-green optically variable magnetic pigment particles having a flake shape of diameter d50 about 9 μm and thickness about 1 μm, obtained from Viavi Solutions, Santa Rosa, CA.

[0166] Magnetic assemblies (x30) shown in Fig. 7A-C to Fig. 14A-C were independently used to orient the platelet-shaped optically variable magnetic pigment particles in a coating layer (x10) made of the UV-curable screen printing ink described in Table 1 so as to produce the optical effect layers (OELs) shown in Fig. 7D to 14D.

[0167] The magnetic assemblies (x30) comprised a soft-magnetic plate (x31) and one or more dipole magnets (x32), wherein each of said one or more dipole magnets (x32) had a magnetic axis substantially perpendicular to the substrate (x20) surface and also substantially perpendicular to the soft magnetic plate (x31) surface, all of said one or more dipole magnets (x32) had a same magnetic direction and were held in place with respect to the soft-magnetic plate (x31) by a piece (x33) of clear Scotch® Removable Poster Tape to simulate a holder.

[0168] The soft-magnetic plates (x31) were made of a composite composition (see Table 2) comprising carbonyl iron as soft magnetic particles (see Table 2). The soft magnetic plates (x31) used in Examples 1-8 were independently prepared by thoroughly mixing the ingredients of Table 2 three minutes in a speed mixer (Flack Tek Inc DAC 150 SP) at 2500 rpm. The mixture was then poured in a silicon mold and left three days to be completely hardened.

[0169] The soft magnetic plates (x31) independently comprised a loop-shaped void (V) defining a loop and independently comprised indentation(s) (I) or protrusion(s) (P), wherein said indentation(s) (I) or protrusion(s) (P) formed a continuous loop-shaped indicium (see Fig. 7A-13A) or a discontinuous

loop-shaped indicium (see Fig. 14A) and wherein said continuous loop-shaped indicium or discontinuous loop-shaped indicium surrounded the void (V). The magnetic assemblies (x30) independently comprised one or more dipole magnets (x32) disposed within the loop formed by the loop-shaped void (V).

[0170] The voids (V), the indentations (I) and the protrusions (P) of the soft magnetic plates (x31) were mechanically engraved in the so-obtained soft magnetic plates (x31) by using a 1 and 2 mm diameter mesh (computer-controlled mechanical engraving machine, IS500 from Gravograph).

Table 2

Ingredients	E2
Epoxy resin (1170 from PHD-24)	13.6 wt-%
Hardener (130 from PHD-24)	4.4 wt-%
Carbonyl iron powder BASF, spherical shape, d_{50} = 4-6 µm, density 7.7 kg/dm^3	82 wt-%

[0171] After having applied the UV-curable screen printing ink as described above and after having magnetically oriented the platelet-shaped optically variable magnetic pigment particles by placing the substrate (x20) carrying the coating layer (x10) on the magnetic assemblies (x30) (see Fig. 7A-14A), the magnetically oriented platelet-shaped optically variable pigment particles were, partially simultaneously with the magnetic orientation step, fixed/frozen by UV-curing the coating layer (x20) with a UV-LED-lamp from Phoseon (Type FireFlex 50 x 75 mm, 395 nm, 8 W/cm^2).

[0172] Pictures of the so-obtained OELs were taken using the following set-up:

- *Light source*: *150W quartz halogen fiber optic (Fiber-lite DC-950 from Dolan-Jenner). Illumination angle is 10° w.r.t. the normal to the substrate.*
- *1.3 MP Camera*: color camera from PixeLINK (PL-B7420) with USB interface.
- *Objective*:0.19X telecentric lens
- Color images were converted to black & white images using a free software (Fiji).

Example 1 (Fig. 7A-D)

[0173] As shown in Fig. 7A-D, an OEL exhibiting five independent effects, each effect showing two nested indicia, in particular two nested loop-shaped indicia (a circular indicium and a regular four-branch star-shaped indicium), was obtained by using the magnetic assembly (730) so as to orient at least a part of the platelet-shaped optically variable magnetic pigment particles of the coating layer (710) on the substrate (720). Each of the five indentations (I) of the soft magnetic plate (731) independently formed a continuous loop-shaped indicium (star), wherein each of said loop-shaped indicium surrounded the void (V) having a circular loop-shaped form.

[0174] Four of the five regular four-branch stars indicia formed the corners of a square (width (A3) = 13 mm) and the fifth one was placed at the center of the square (meaning at a distance sqrt(2)/2·A3 or 9.2 mm from each of the four stars placed at the corner of the square). Fig. 7B only displays one four-

branched star for clarity reason and Fig. 7C represents a cross section of the magnetic assembly (730) passing through the virtual center of two stars forming the side of said square.

[0175] The magnetic assembly (730) comprised i) a soft magnetic plate (731) (width (A1) = 40 mm, thickness (A2) = 2 mm), wherein said soft magnetic plate (731) comprised five circular voids (V) (diameter (A4) = 3.5 mm, a depth (A7) = 2 mm) and five regular four-branch star-shaped indentations (I) (internal diameter (A8) = 5 mm, external diameter (A9) = 12 mm, thickness (A5) = 1 mm, depth (A10) = 1.6 mm). As shown in Fig. 7A-C, each circular void (V) defined a loop and each circular void (V) was symmetrically surrounded by one of the four-branch star-shaped indentations (I).

[0176] The magnetic assembly (730) comprised ii) five dipole magnets (732) (diameter (A6) = 2 mm, thickness (A7) = 2 mm) made of NdFeB N45, each of said five dipole magnets (732) being independently disposed symmetrically within the loop defined by each of the circular voids (V). Each of the five dipole magnets (732) had its magnetic axis substantially perpendicular to the substrate (720) surface (also substantially perpendicular to the soft magnetic plate (731) surface) with its North pole pointing towards said substrate (720) surface. As shown in Fig. 7C, the top surface of each of the five dipole magnets (732) was flush with the top surface of the soft magnetic plate (731) and the bottom surface of each of the five dipole magnets (732) was flush with the bottom surface of the soft magnetic plate (731). The five dipole magnets (732) were held in place using a piece (733) of double-sided Scotch® tape (13 mm x 5 mm).

[0177] The distance (h) between the top surface of the soft magnetic plate (731) and the substrate (720) surface was 0 mm, i.e. the substrate (720) carrying the coating composition (710) was placed in direct contact with the magnetic assembly (730), i.e. with the soft magnetic plate (731).

[0178] The resulting OEL produced with the magnetic assembly (730) illustrated in Fig. 7A-C is shown in Fig. 7D at different viewing angles by tilting the substrate (720) between 30° and -30°.

Example 2 (Fig. 8A-D)

[0179] As shown in Fig. 8A-C, an OEL exhibiting two nested indicia, in particular two nested loop-shaped indicia (circular indicia), was obtained by using the magnetic assembly (830) so as to orient at least a part of the platelet-shaped optically variable magnetic pigment particles of the coating layer (810) on the substrate (820). The indentation (I) of the soft magnetic plate (831) formed a continuous loop-shaped indicium (circle), wherein said loop-shaped indicium surrounded the void (V) having a circular loop-shaped form.

[0180] The magnetic assembly (830) comprised i) a soft magnetic plate (831) (width (A1) = 40 mm, thickness (A2) = 2 mm), wherein said soft magnetic plate (831) comprised a circular void (V) (diameter (A4) = 7 mm, a depth (A7) = 2 mm) and a circular indentation (I) (diameter (A8) = 13 mm, thickness (A5) = 1 mm, depth (A10) = 1.6 mm). As shown in Fig. 8A-C, the circular void (V) defined a loop and was symmetrically surrounded by the circular indentation (I).

[0181] The magnetic assembly (830) comprised ii) a cylindrical dipole magnet (832) (diameter (A6) = 3 mm, thickness = 8 mm) made of NdFeB N45, said dipole magnet (832) being disposed symmetrically within the loop defined by the circular void (V). The dipole magnet (832) had its magnetic axis substantially perpendicular to the substrate (820) surface (also substantially

perpendicular to the soft magnetic plate (831) surface) with its North pole pointing towards said substrate (820) surface. As shown in Fig. 8C, the top surface of the dipole magnet (832) was flush with the top surface the soft magnetic plate (831) and the bottom surface of the dipole magnet (832) was below the bottom surface of the soft magnetic plate (831). The dipole magnet (832) was held in place using a piece (833) of double-sided Scotch® tape (13 mm x 13 mm).

[0182] The distance (h) between the top surface of the soft magnetic plate (831) and the substrate (820) surface was 0.1 mm.

[0183] The resulting OEL produced with the magnetic assembly (830) illustrated in Fig. 8A-C is shown in Fig. 8D at different viewing angles by tilting the substrate (820) between 30° and -30°.

Example 3 (Fig. 9A-D)

[0184] As shown in Fig. 9A-C, an OEL exhibiting two nested indicia, in particular two nested loop-shaped indicia (circular indicia), was obtained by using the magnetic assembly (930) so as to orient at least a part of the platelet-shaped optically variable magnetic pigment particles of the coating layer (910) on the substrate (920). The indentation (I) of the soft magnetic plate (931) formed a continuous loop-shaped indicium (circle), wherein said loop-shaped indicium surrounded the void (V) having a circular loop-shaped form.

[0185] The magnetic assembly (930) comprised i) a soft magnetic plate (931) (width (A1) = 40 mm, thickness (A2) = 2 mm), wherein said soft magnetic plate (931) comprised a circular void (V) (diameter (A4) = 7 mm, a depth (A7) = 2 mm) and a circular indentation (I) (diameter (A8) = 12 mm, thickness (A5) = 1 mm, depth (A10) = 1.6 mm). As shown in Fig. 9A-C, the circular void (V) defined a loop and was symmetrically surrounded by the circular indentation (I).

[0186] The magnetic assembly (930) comprised ii) four cylindrical dipole magnets (932a-d) (diameter (A6) = 3 mm, thickness (A7) = 2 mm) made of NdFeB N45 were disposed symmetrically within the loop defined by the circular void (V). Each of said four dipole magnets (932a-d) had its magnetic axis substantially perpendicular to the substrate (920) surface (also substantially perpendicular to the soft magnetic plate (931) surface) and its North pole pointing towards said substrate (920) surface. A first dipole magnet (932a) was disposed symmetrically within the loop defined by the circular void (V) and was held in place using a piece (933) of double-sided Scotch® tape of (13 mm x 13 mm). Three other dipole magnets (932b-d) were disposed below each other under the piece (933), said three dipole magnets (932b-d) were aligned with the first dipole magnet (932a) and all of them had their magnetic axis in the same direction. The dipole magnets (932b-d) were kept in place by the magnetic force provided by the alignment of their magnetic axis. As shown in Fig. 9C, the top surface of the first dipole magnet (932a) was flush with the top surface of the soft magnetic plate (931) and the bottom surface of the fourth dipole magnet (932d) was below the bottom surface of the soft magnetic plate (931).

[0187] The distance (h) between the top surface of the soft magnetic plate (931) and the substrate (920) surface was 0 mm, i.e. the substrate (920) carrying the coating composition (910) was placed in direct contact with the magnetic assembly (930), i.e. with the soft magnetic plate (931).

[0188] The resulting OEL produced with the magnetic assembly (930) illustrated in Fig. 9A-C is

shown in Fig. 9D at different viewing angles by tilting the substrate (920) between 30° and -30°.

[0189] The so-obtained OEL appears to be similar to the effect shown for Example 2 on Fig. 8D, this showing that a plurality, i.e. more than one, dipole magnets aligned along their magnetic axis may be replaced by a single dipole magnet.

Example 4 (Fig. 10A-D)

[0190] As shown in Fig. 10A-C, an OEL exhibiting two nested indicia, in particular two nested loop-shaped indicia (circular indicia), was obtained by using the magnetic assembly (1030) so as to orient at least a part of the platelet-shaped optically variable magnetic pigment particles of the coating layer (1010) on the substrate (1020). The protrusion (P) of the soft magnetic plate (1031) formed a continuous loop-shaped indicium (circle), wherein said loop-shaped indicium surrounded the void (V) having a circular loop-shaped form.

[0191] The magnetic assembly (1030) comprised i) a soft magnetic plate (1031) (width (A1) = 40 mm, thickness (A2 + A10) = (0.4 + 1.6) 2 mm), wherein said soft magnetic plate (1031) comprised a circular void (V) (diameter (A4) = 4 mm, a depth (A7) = 2 mm) and a circular protrusion (P) (diameter (A8) = 10 mm, thickness (A5) = 2 mm, height (A10) = 1.6 mm). As shown in Fig. 10A-C, the circular void (V) defined a loop and was symmetrically surrounded by the circular protrusion (P).

[0192] The magnetic assembly (1030) comprised ii) five cylindrical dipole magnets (1032a-e) (diameter (A6) = 2 mm, thickness (A7) = 2 mm) made of NdFeB N45 were disposed symmetrically within the loop defined by the circular void (V). Each of said five dipole magnets (1032a-e) had its magnetic axis substantially perpendicular to the substrate (1020) surface (also substantially perpendicular to the soft magnetic plate (1031) surface) and its North pole pointing towards said substrate (1020) surface. A first dipole magnet (1032a) was disposed symmetrically within the loop defined by the circular void (V) and was held in place using a piece (1033) of double-sided Scotch® tape of (13 mm x 10 mm). Four other dipole magnets (1032b-e) were disposed below each other under the piece (1033), said four dipole magnets (1032b-e) were aligned with the first dipole magnet (1032a) and all of them had their magnetic axis in the same direction. The dipole magnets (1032b-e) were kept in place by the magnetic force provided by the alignment of their magnetic axis. As shown in Fig. 10C, the top surface of the first dipole magnet (1032a) was flush with the top surface of the soft magnetic plate (1031), i.e. with the top surface of the protrusion (P), and the bottom surface of the fifth dipole magnet (1032e) was below the bottom surface of the soft magnetic plate (1031).

[0193] The distance (h) between the top surface of the soft magnetic plate (1031) and the substrate (1020) surface was 0 mm, i.e. the substrate (1020) carrying the coating composition (1010) was placed in direct contact with the magnetic assembly (1030), i.e. with the protrusion (P) of the soft magnetic plate (1031).

[0194] The resulting OEL produced with the magnetic assembly (1030) illustrated in Fig. 10A-C is shown in Fig. 10D at different viewing angles by tilting the substrate (1020) between 30° and -30°.

Example 5 (Fig. 11A-D)

[0195] As shown in Fig. 11A-C, an OEL exhibiting two nested indicia, in particular two nested loop-shaped indicia (a circular indicium and a square-shaped indicium), was obtained by using the magnetic assembly (1130) so as to orient at least a part of the platelet-shaped optically variable magnetic pigment particles of the coating layer (1110) on the substrate (1120). The indentation (I) of the soft magnetic plate (1131) formed a continuous loop-shaped indicium (square), wherein said loop-shaped indicium surrounded the void (V) having a circular loop-shaped form. The magnetic assembly (1130) comprised i) a soft magnetic plate (1131) (width (A1) = 40 mm, thickness (A2) = 1.5 mm), wherein said soft magnetic plate (1131) comprised a circular void (V) (diameter (A4) = 5 mm, a depth (A7) = 1.5 mm) and a square-shaped indentation (I) ((A8) = (A9) = 12 mm, thickness (A5) = 2 mm, depth (A10) = 1.1 mm). As shown in Fig. 11A-C, the circular void (V) defined a loop and was symmetrically surrounded by the square-shaped indentation (I).

[0196] The magnetic assembly (1130) comprised ii) four cylindrical dipole magnets (1132a-d) made of NdFeB N45 were disposed symmetrically within the loop defined by the circular void (V). Each of said four dipole magnets (1132a-d) had its magnetic axis substantially perpendicular to the substrate (1120) surface (also substantially perpendicular to the soft magnetic plate (1131) surface) and its North pole pointing towards said substrate (1120) surface. A first dipole magnet (1132a) (diameter (A6) = 3 mm, thickness (A11) = 1 mm) was disposed symmetrically within the loop defined by the circular void (V) and was held in place using a piece (1133) of double-sided Scotch® tape of (13 mm x 12 mm). Three other dipole magnets (1132b-d) (diameter (A6) = 3 mm, thickness (A12) = 2 mm)were disposed below each other under the piece (1133), said three dipole magnets (1132b-d) were aligned with the first dipole magnet (1132a) and all of them had their magnetic axis in the same direction. The dipole magnets (1132b-d) were kept in place by the magnetic force provided by the alignment of their magnetic axis. As shown in Fig. 11C, the top surface of the first dipole magnet (1132a) was 0.5 mm below the top surface of the soft magnetic plate (1131) and the bottom surface of the fourth dipole magnet (1132d) was below the bottom surface of the soft magnetic plate (1131).

[0197] The distance (h) between the top surface of the soft magnetic plate (1131) and the substrate (1120) surface was 0 mm, i.e. the substrate (1120) carrying the coating composition (1310) was placed in direct contact with the magnetic assembly (1130), i.e. with the soft magnetic plate (1131).

[0198] The resulting OEL produced with the magnetic assembly (1130) illustrated in Fig. 11A-C is shown in Fig. 11D at different viewing angles by tilting the substrate (1120) between 30° and -30°.

Example 6 (Fig. 12A-D)

[0199] As shown in Fig. 12A-C, an OEL exhibiting two nested indicia in particular two nested loop-shaped indicia (circular indicia) was obtained by using the magnetic assembly (1230) so as to orient at least a part of the platelet-shaped optically variable magnetic pigment particles of the coating layer (1210) on the substrate (1220). The indentation (I) of the soft magnetic plate (1231) formed a continuous loop-shaped indicium (circle), wherein said loop-shaped indicium surrounded the void (V) having a circular loop-shaped form.

[0200] The magnetic assembly (1230) comprised i) a soft magnetic plate (1231) (width (A1) = 40 mm, thickness (A2) = 2 mm), wherein said soft magnetic plate (1231) comprised a circular void (V)

(diameter (A4) = 5 mm, a depth (A7) = 2 mm) and a circular indentation (I) (diameter (A8) = 15 mm, thickness (A5) = 1 mm , depth (A10) = 1.6 mm). As shown in Fig. 12A-C, the circular void (V) defined a loop being and was non-symmetrically surrounded by the circular indentation (I).

[0201] The magnetic assembly (1230) comprised ii) four cylindrical dipole magnets (1232a-d) (diameter (A6) = 3 mm, thickness (A7) = 2 mm) made of NdFeB N45 were disposed symmetrically within the loop defined by the circular void (V). Each of said four dipole magnets (1232a-d) had its magnetic axis substantially perpendicular to the substrate (1220) surface (also substantially perpendicular to the soft magnetic plate (1231) surface) and its North pole pointing towards said substrate (1220) surface. A first dipole magnet (1232a) was disposed symmetrically within the loop defined by the circular void (V) and was held in place using a piece (1233) of double-sided Scotch® tape of (13 mm x 12 mm). Three other dipole magnets (1232b-d) were disposed below each other under the piece (1233), said three dipole magnets (1232b-d) were aligned with the first dipole magnet (1232a) and all of them had their magnetic axis in the same direction. The dipole magnets (1232b-d) were kept in place by the magnetic force provided by the alignment of their magnetic axis. As shown in Fig. 12C, the top surface of the first dipole magnet (1232a) was flush with the top surface of the soft magnetic plate (1231) and the bottom surface of the fourth dipole magnet (1232d) was below the bottom surface of the soft magnetic plate (1231).

[0202] The distance (h) between the top surface of the soft magnetic plate (1231) and the substrate (720) surface was 0 mm, i.e. the substrate (1220) carrying the coating composition (1210) was placed in direct contact with the magnetic assembly (1230), i.e. with the soft magnetic plate (1231).

[0203] The resulting OEL produced with the magnetic assembly (1230) illustrated in Fig. 12A-C is shown in Fig. 12D at different viewing angles by tilting the substrate (1220) between 30° and -30°.

Example 7 (Fig. 13A-D)

[0204] As shown in Fig. 13A-C, an OEL exhibiting two nested indicia, in particular two nested loop-shaped indicia (two regular six-branch star-shaped indicia), was obtained by using the magnetic assembly (1330) so as to orient at least a part of the platelet-shaped optically variable magnetic pigment particles of the coating layer (1310) on the substrate (1320). The indentation (I) of the soft magnetic plate (1331) formed a continuous loop-shaped indicium (star), wherein said loop-shaped indicium surrounded the void (V) having a star loop-shaped form.

[0205] The magnetic assembly (1330) comprised i) a soft magnetic plate (1331) (width (A1) = 40 mm, thickness (A2) = 2 mm), wherein said soft magnetic plate (1331) comprised a regular six-branched star-shaped void (V) (external diameter (A4) = 6 mm, internal diameter (A4') = 4 mm, depth (A7) = 2 mm) and a regular six-branched star-shaped indentation (I) (external diameter (A9) = 15 mm, internal diameter (A8) = 8 mm, thickness (A5) = 1 mm and depth (A10) = 1.6 mm). As shown in Fig. 13A-C, the star-shaped void (V) defined a loop and was symmetrically surrounded by the star-shaped indentation (I).

[0206] The magnetic assembly (1330) comprised ii) three cylindrical dipole magnets (1332a-c) (diameter (A6) = 3 mm, thickness (A7) = 2 mm) made of NdFeB N45 were disposed symmetrically within the loop defined by the star-shaped void (V). Each of said three dipole magnets (1332a-c) had

its magnetic axis substantially perpendicular to the substrate (1320) surface (also substantially perpendicular to the soft magnetic plate (1331) surface) and its North pole pointing towards said substrate (1320) surface. A first dipole magnet (1332a) was disposed symmetrically within the loop defined by the star-shaped void (V) and was held in place using a piece (1333) of double-sided Scotch® tape (13 mm x 13 mm). Two other dipole magnets (1332b-c) were disposed below each other under the piece (1333), said two dipole magnets (1332b-c) were aligned with the first dipole magnet (1332a) and all of them had their magnetic axis in the same direction. The dipole magnets (1332b-c) were kept in place by the magnetic force provided by the alignment of their magnetic axis. As shown in Fig. 13C, the top surface of the first dipole magnet (1332a) was flush with the top surface of the soft magnetic plate (1331) and the bottom surface of the third dipole magnet (1332c) was below the bottom surface of the soft magnetic plate (1331).

[0207] The distance (h) between the top surface of the soft magnetic plate (1331) and the substrate (1320) surface was 0 mm, i.e. the substrate (1320) carrying the coating composition (1310) was placed in direct contact with the magnetic assembly (1330), i.e. with the soft magnetic plate (1331).

[0208] The resulting OEL produced with the magnetic assembly (1330) illustrated in Fig. 13A-C is shown in Fig. 13D at different viewing angles by tilting the substrate (1320) between 30° and -30°.

Example 8 (Fig. 14A-D)

[0209] As shown in Fig. 14A-C, an OEL exhibiting two nested indicia, in particular two nested loop-shaped indicia (a two six-branch star-shaped indicia), was obtained by using the magnetic assembly (1430) so as to orient at least a part of the platelet-shaped optically variable magnetic pigment particles of the coating layer (1410) on the substrate (1420). The six indentations (I) of the soft magnetic plate (1431) formed a discontinuous loop-shaped indicium (star), wherein said loop-shaped indicium surrounded the void (V) having a star loop-shaped form.

[0210] The magnetic assembly (1430) comprised i) a soft magnetic plate (1431) (width (A1) = 40 mm, thickness (A2) = 1.5 mm), wherein said soft magnetic plate (1431) comprised a regular six-branched star-shaped void (V) (external diameter (A4) = 6 mm, internal diameter (A4') = 4 mm, depth = 1.5 mm) and six indentations (I) forming a discontinuous regular six-branched star-shaped indicium (I) (diameter (A8) = 8.5 mm, thickness (A5) = 1 mm, depth (A10) = 1.6 mm and length (A13) = 3 mm). As shown in Fig. 14A-C, the star-shaped void (V) defined a loop and was symmetrically surrounded by the discontinuous regular six-branched star-shaped indicium made of the six indentations (I)

[0211] The magnetic assembly (1430) comprised ii) four cylindrical dipole magnets (1432a-d) (diameter (A6) = 3 mm, thickness (A7) = 2 mm) made of NdFeB N45 were disposed symmetrically within the loop defined by the star-shaped void (V). Each of said four dipole magnets (1432a-c) had its magnetic axis substantially perpendicular to the substrate (1420) surface (also substantially perpendicular to the soft magnetic plate (1431) surface) and its North pole pointing towards said substrate (1420) surface. A first dipole magnet (1432a) was disposed symmetrically within the loop defined by the star-shaped void (V) and was held in place using a piece (1433) of double-sided Scotch® tape (13 mm x 13 mm). Three other dipole magnets (1432b-c) were disposed below each other under the piece (1433), said two dipole magnets (1432b-c) were aligned with the first dipole

magnet (1432a) and all of them had their magnetic axis in the same direction. The dipole magnets (1432b-c) were kept in place by the magnetic force provided by the alignment of their magnetic axis. As shown in Fig. 14C, the top surface of the first dipole magnet (1432a) was flush with the top surface of the soft magnetic plate (1431) and the bottom surface of the fourth dipole magnet (1432c) was below the bottom surface of the soft magnetic plate (1431).

[0212] The distance (h) between the top surface of the soft magnetic plate (1431) and the substrate (1420) surface was 0 mm, i.e. the substrate (1420) carrying the coating composition (1410) was placed in direct contact with the magnetic assembly (1430), i.e. with the soft magnetic plate (1431).

[0213] The resulting OEL produced with the magnetic assembly (1430) illustrated in Fig. 14A-C is shown in Fig. 14D at different viewing angles by tilting the substrate (1420) between 30° and -30°.

2019313421 11 Jun 2024

CLAIMS

1. A process for producing an optical effect layer exhibiting two or more nested indicia on a substrate, said process comprising the steps of:

   a) applying onto a substrate surface a coating composition comprising i) platelet-shaped magnetic or magnetizable pigment particles and ii) a binder material so as to form a coating layer on said substrate, said coating composition being in a first liquid state;

   b) exposing the coating layer to a magnetic field of a magnetic assembly comprising

      i) a soft magnetic plate comprising one or more soft magnetic metals, alloys or compounds of high magnetic permeability or made of a composite comprising from about 25 wt-% to about 95 wt-% of soft magnetic particles dispersed in a non-magnetic material, the weight percents being based on the total weight of the magnetic plate,

         wherein the soft magnetic plate comprises one or more voids for receiving one or more dipole magnets,

         wherein the soft magnetic plate comprises one or more indentations and/or one or more protrusions, each of said one or more indentations and/or one or more protrusions forming one or more continuous loop-shaped indicia and/or one or more discontinuous loop-shaped indicia, and

         wherein the one or more voids are surrounded by the one or more continuous loop-shaped indicia and/or the one or more voids are surrounded by the one or more discontinuous loop-shaped indicia,

      ii) the one or more dipole magnets, each of said one or more dipole magnets having its magnetic axis substantially perpendicular to the substrate surface and all of said one or more dipole magnets having a same magnetic direction, wherein said one or more dipole magnets are disposed within the one or more voids;

   and

   c) hardening the coating composition to a second state so as to fix the platelet-shaped magnetic or magnetizable pigment particles in their adopted positions and orientations.

2. The process according to claim 1, wherein the soft magnetic plate comprises the one or more indentations and wherein the top surface of the one or more dipole magnets, is flush with the top surface of the soft magnetic plate.

3. The process according to claim 1, wherein the soft magnetic plate comprises the one or more protrusions and wherein the top surface of the one or more dipole magnets, is flush with the top surface of the soft magnetic plate.

4. The process according to any preceding claim further comprising a step of exposing the coating layer to a dynamic magnetic field of a device so as to bi-axially orient at least a part of the platelet-

shaped magnetic or magnetizable pigment particles, said step occurring prior to or simultaneously with step b) and before step c).

5. The process according to any preceding claim, wherein the soft magnetic plate is made a composite comprising from about 25 wt-% to about 95 wt-% of soft magnetic particles dispersed in a non-magnetic material being a polymeric matrix comprising or consisting of either thermoplastic materials selected from the group consisting of polyamides, co-polyamides, polyphtalimides, polyolefins, polyesters, polytetrafluoroethylenes, polyacrylates, polymethacrylates, polyimides, polyetherimides, polyetheretherketones, polyaryletherketones, polyphenylene sulfides, liquid crystal polymers, polycarbonates and mixtures thereof or a thermosetting material selected from the group consisting of epoxy resins, phenolic resins, polyimide resins, silicon resins and mixtures thereof.

6. The process according to any preceding claim, wherein the soft magnetic particles are selected from the group consisting of carbonyl iron, carbonyl nickel, cobalt and combinations thereof.

7. The process according to any preceding claim, wherein the soft magnetic particles have a d50 between about 0.5 μm and about 100 μm.

8. The process according to any of claims 5 to 7, wherein the one or more voids have a depth between about 5% and about 100% in comparison with the thickness of the soft magnetic plate, and/or the one or more indentations have a depth between about 5% and about 100%, preferably between about 5% and 90%, in comparison with the thickness of the soft magnetic plate and/or the one or more protrusions have a height between about 5% and about 100% in comparison with the thickness of the soft magnetic plates.

9. The process according to any preceding claim, wherein the diameter of the one or more dipole magnets is smaller than the size of the one or more voids.

10. The process according to any preceding claim, wherein the step c) of hardening the coating composition is carried out partially simultaneously with the step b).

11. The process according to any preceding claim, wherein the platelet-shaped magnetic or magnetizable pigment particles are platelet-shaped optically variable magnetic or magnetizable pigment particles selected from the group consisting of platelet-shaped magnetic thin-film interference pigment particles, platelet-shaped magnetic cholesteric liquid crystal pigment particles, platelet-shaped interference coated pigment particles comprising a magnetic material and mixtures of two or more thereof.

12. An optical effect layer produced by the process recited in any one of claims 1 to 11.

13. A security document or a decorative element or object comprising one or more optical effect layer recited in claim 12.

14. Method of manufacturing a security document or a decorative element or object, comprising:
a) providing a security document or a decorative element or object, and
b) providing an optical effect layer according to the process of one of claims 1 to 11 so that it is comprised by the security document or decorative element or object.

15. A use of the soft magnetic plate recited in any one of claims 1 to 11 together with the one or more dipole magnets, wherein each of said one or more dipole magnets has a magnetic axis substantially perpendicular to the substrate surface and all of said one or more dipole magnets have a same magnetic direction, wherein said one or more dipole magnets are disposed within the voids for magnetically orienting platelet-shaped magnetic or magnetizable pigment particles in a coating layer on a substrate.

SICPA HOLDING SA

Patent Attorneys for the Applicant/Nominated Person

SPRUSON & FERGUSON

Fig. 1A

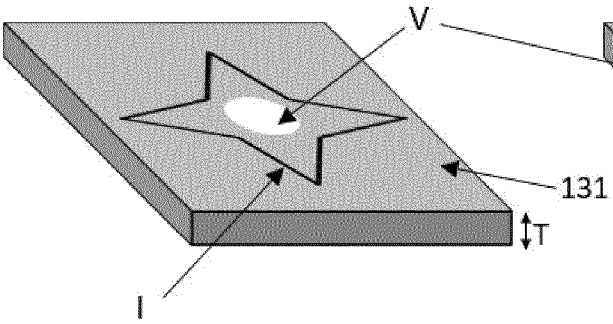

Fig. 1B

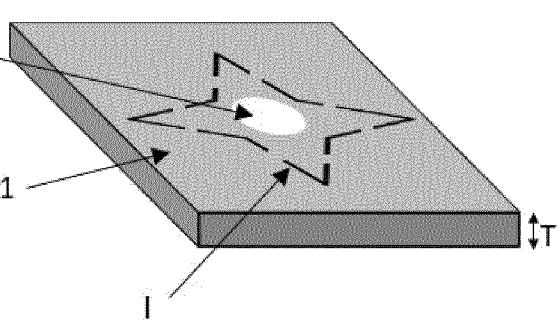

Fig. 2A

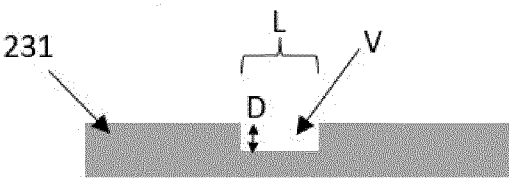

Fig. 2B

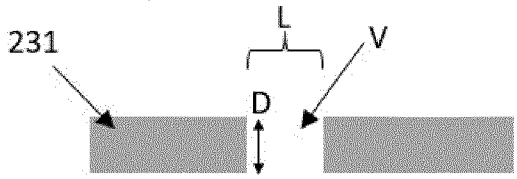

Fig. 3A

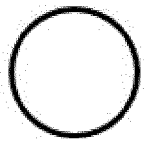

Fig. 3B

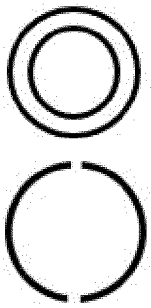

Fig. 3C

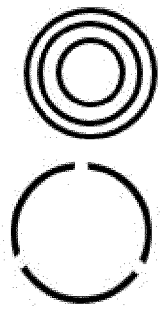

Fig. 3D

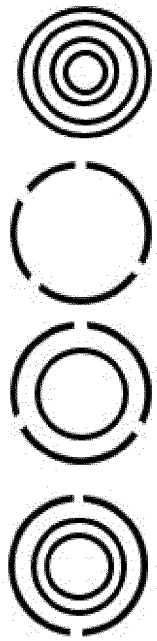

Fig. 4A

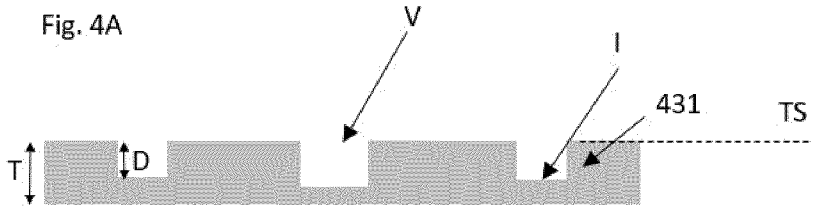

Fig. 4B

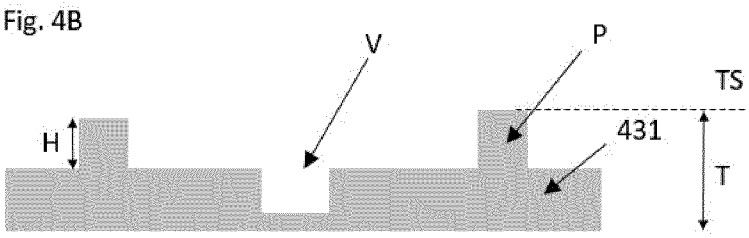

Fig. 5A

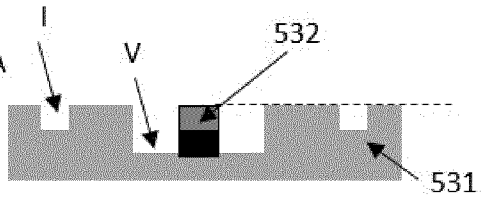

Fig. 5B

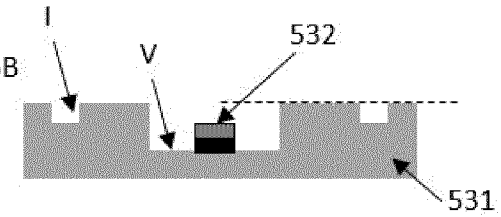

Fig. 5C

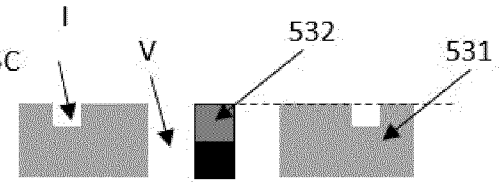

Fig. 5D

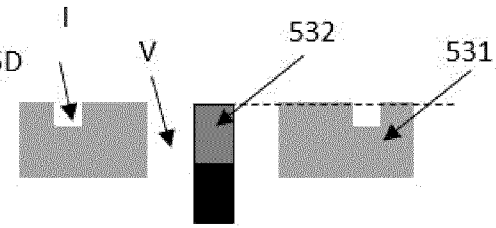

Fig. 5E

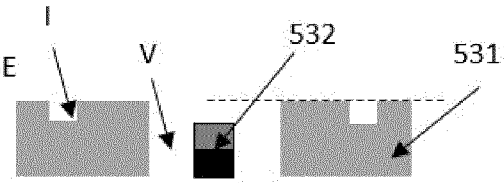

Fig. 5F

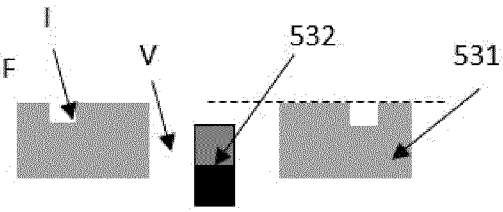

Fig. 6A

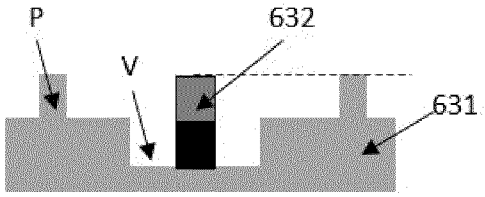

Fig. 6B

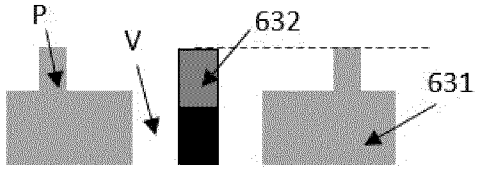

Fig. 6C

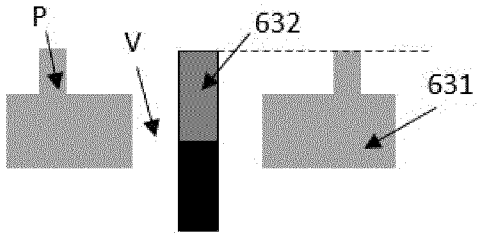

Fig. 7A

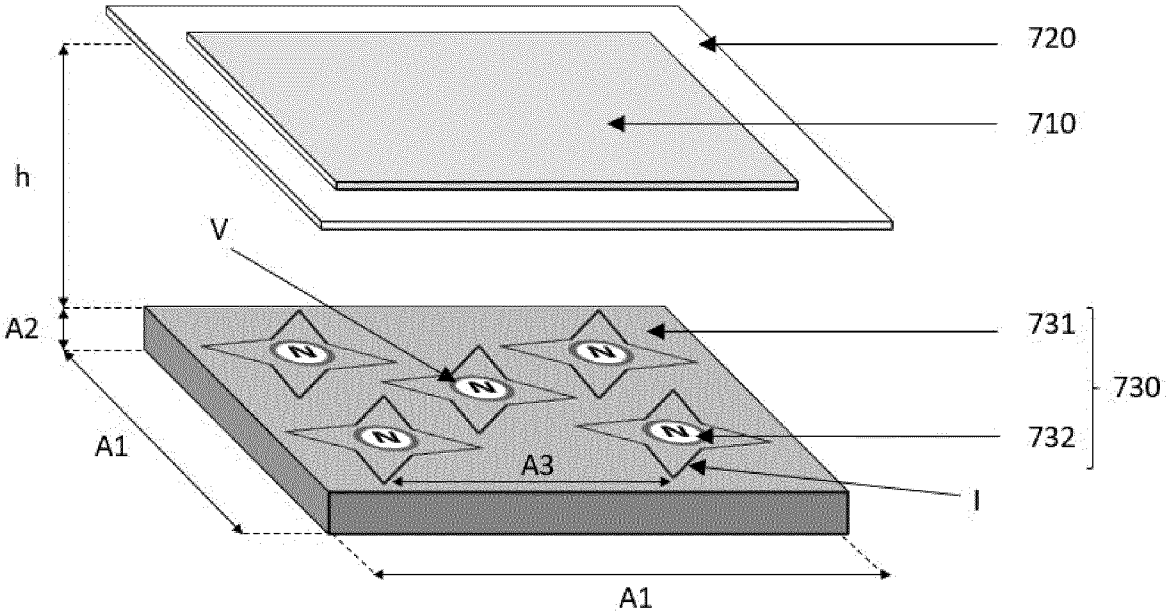

Fig. 7B

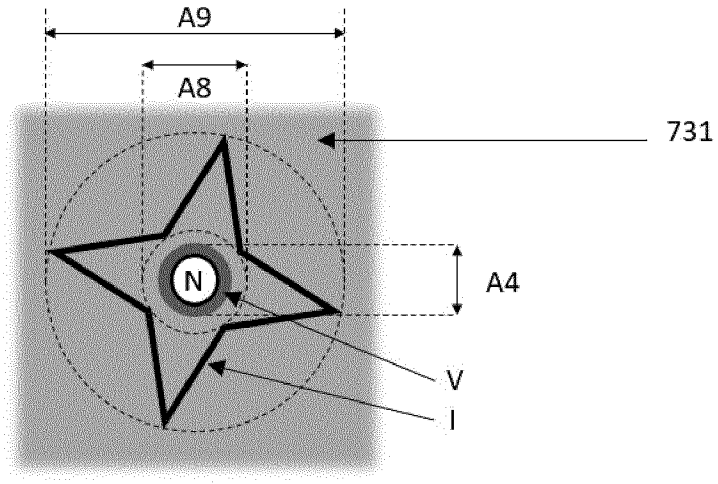

Fig. 7C

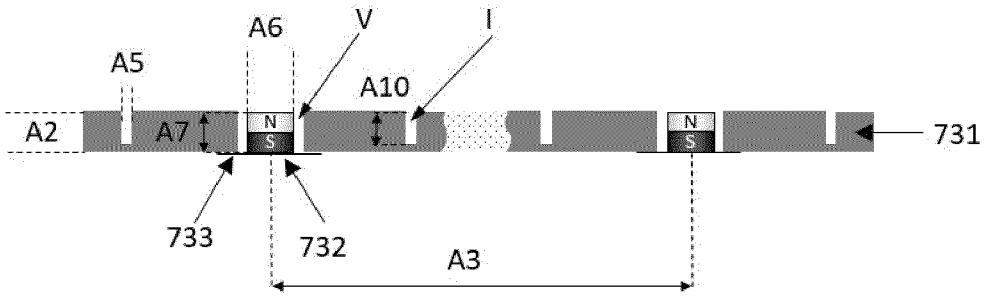

Fig. 7D

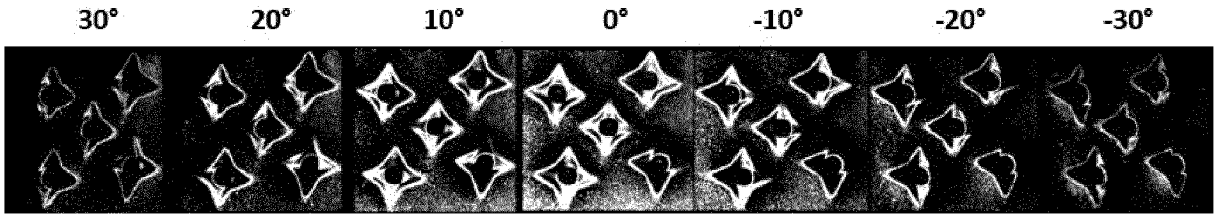

Fig. 8A

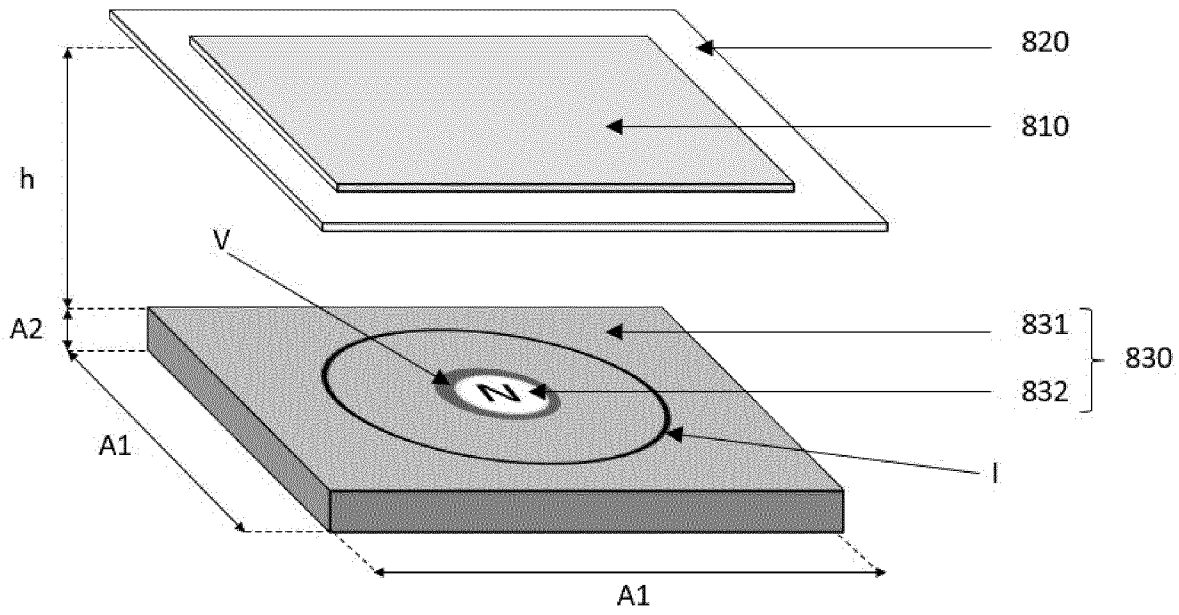

Fig. 8B

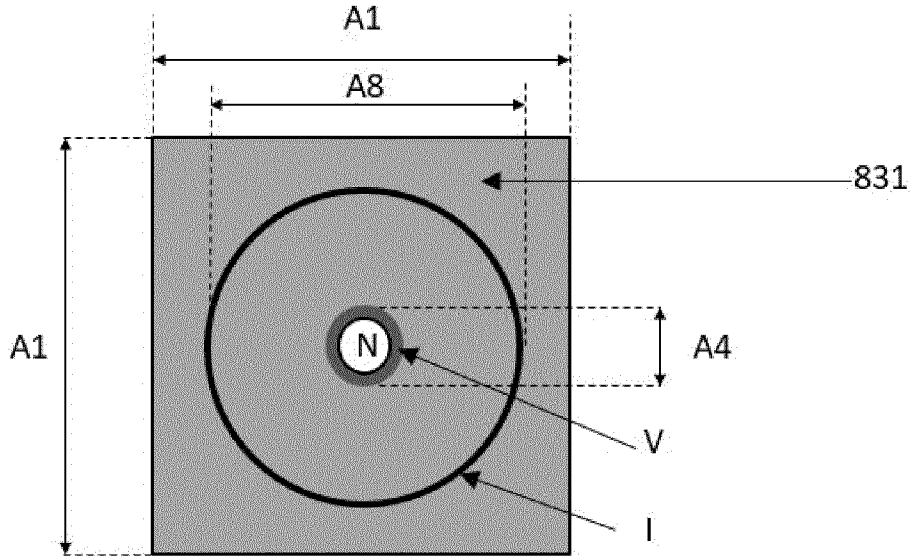

Fig. 8C

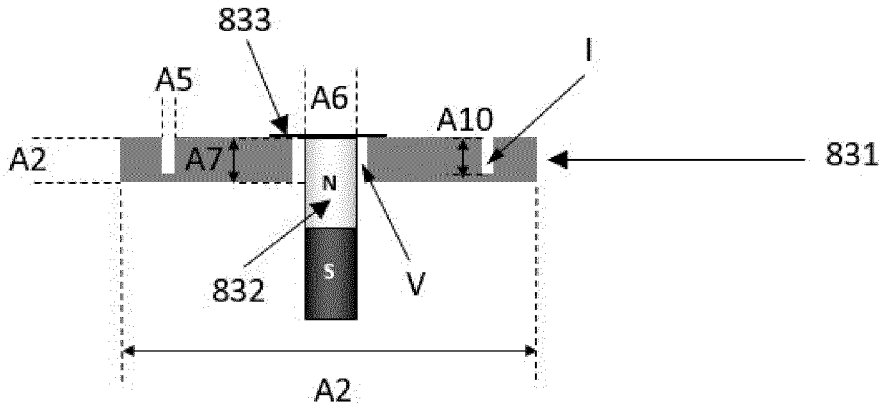

Fig. 8D

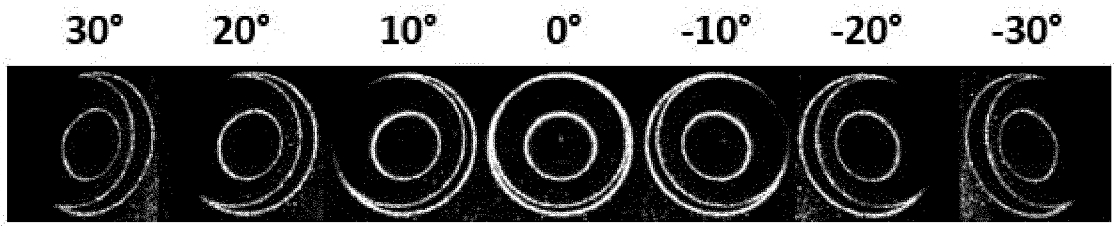

Fig. 9A

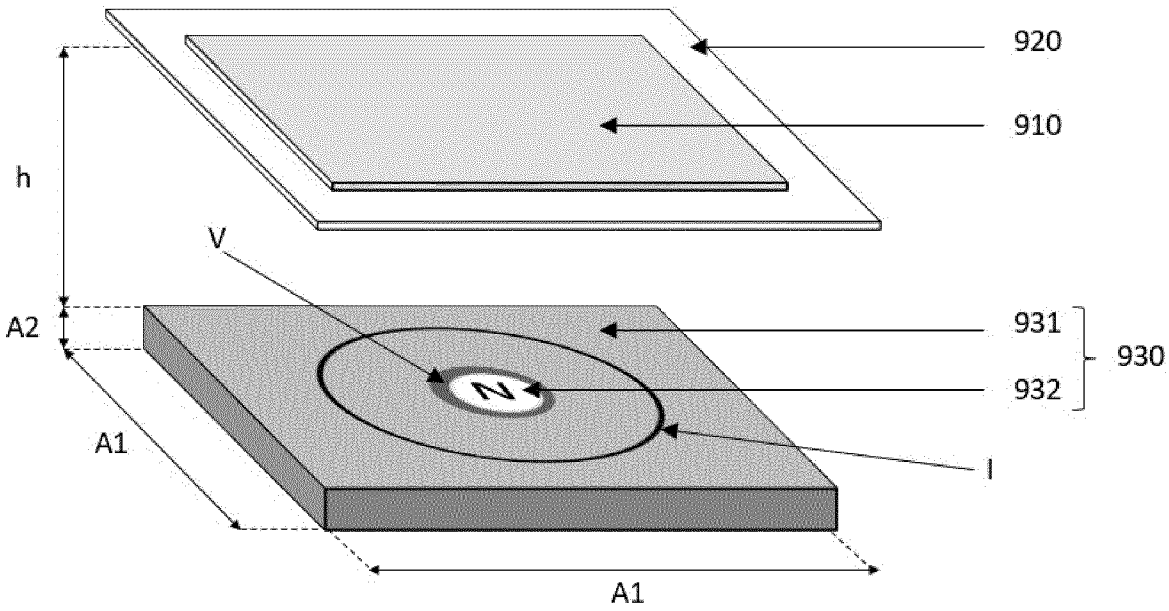

Fig. 9B

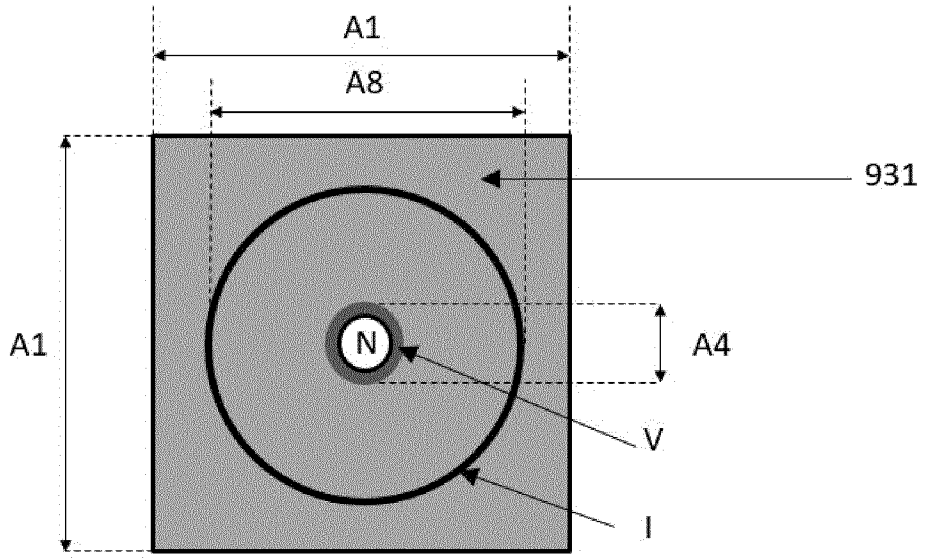

Fig. 9C

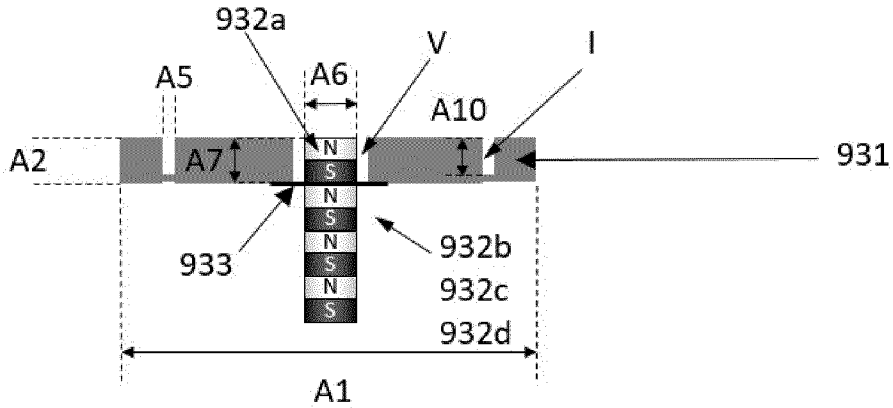

Fig. 9D

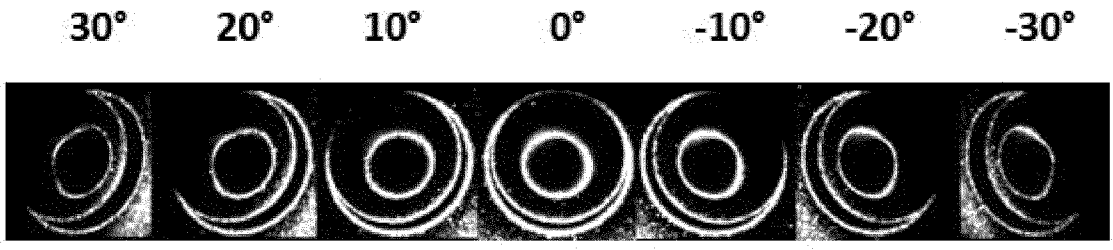

Fig. 10A

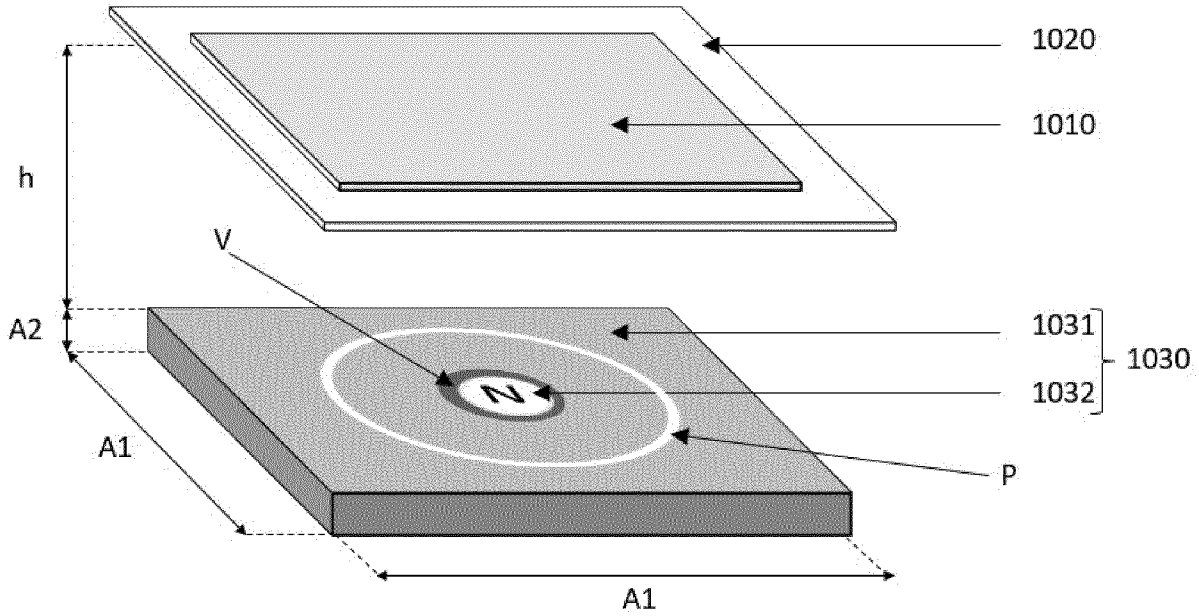

Fig. 10B

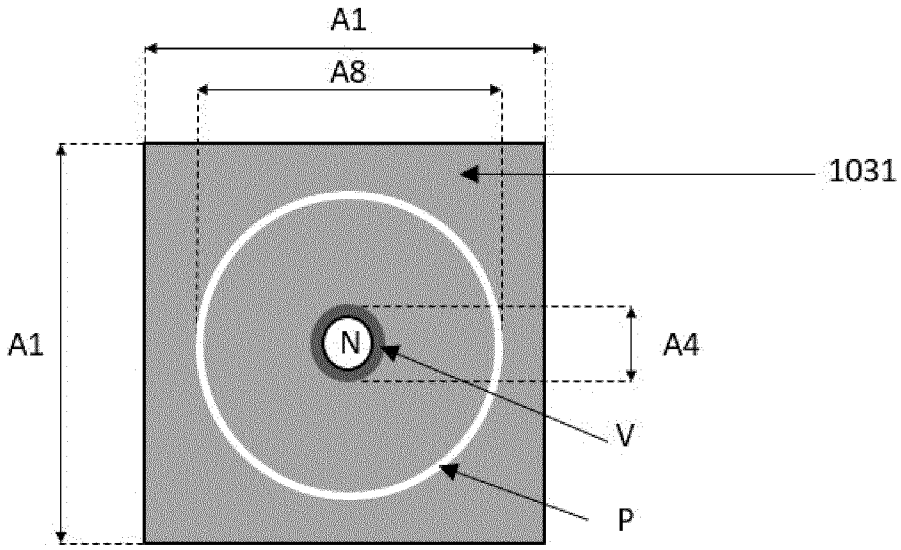

Fig. 10C

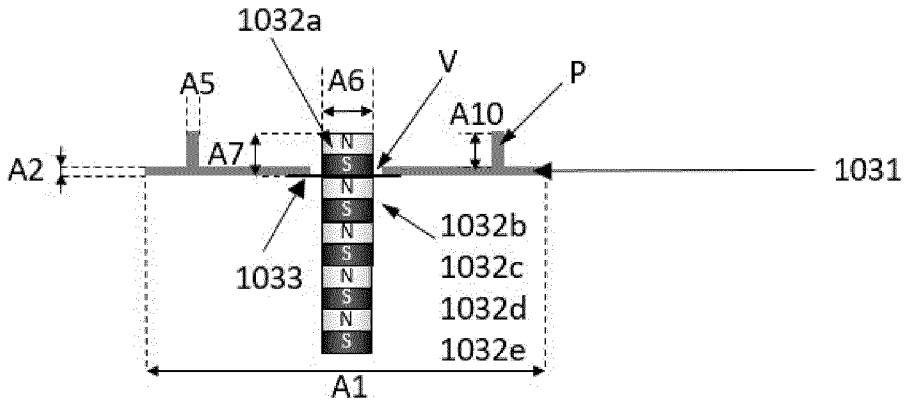

Fig. 10D

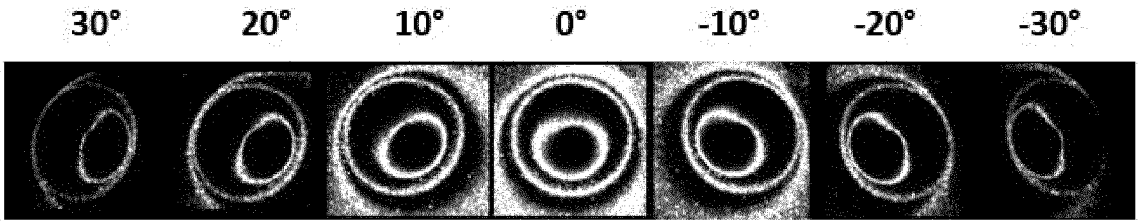

Fig. 11A

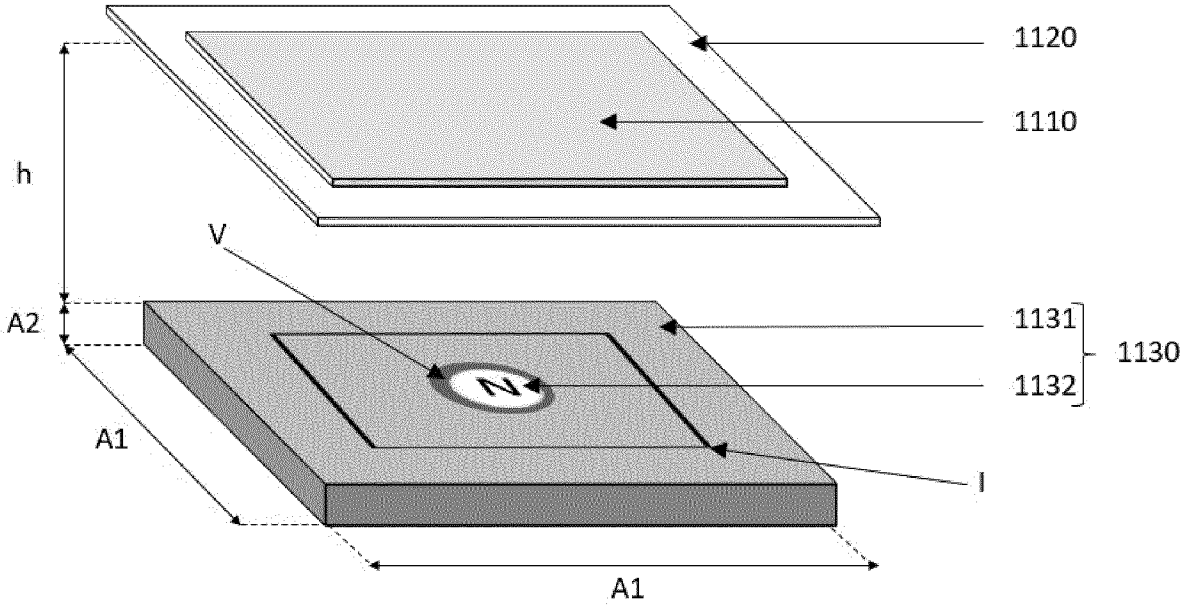

Fig. 11B

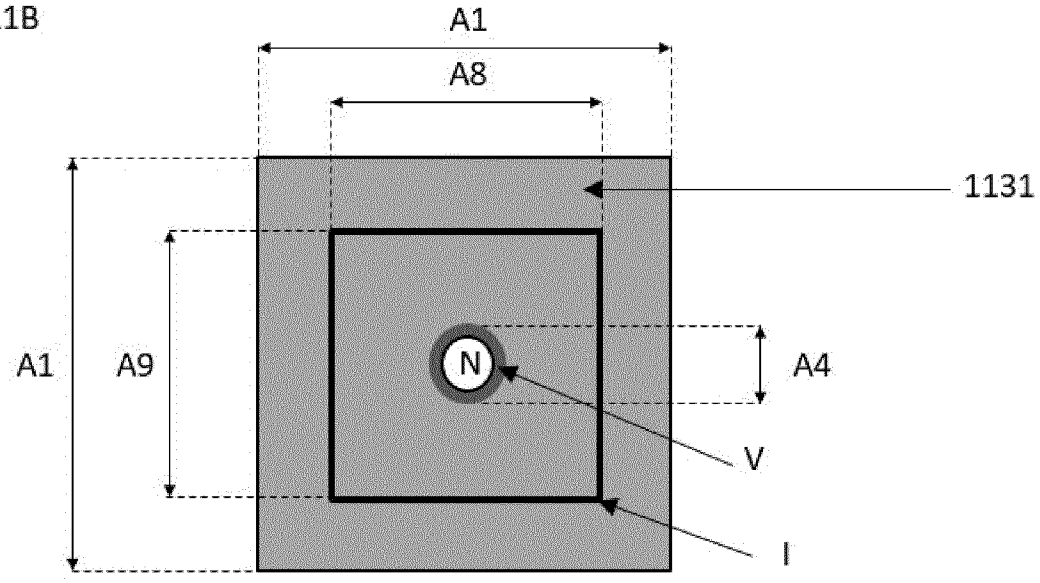

Fig. 11C

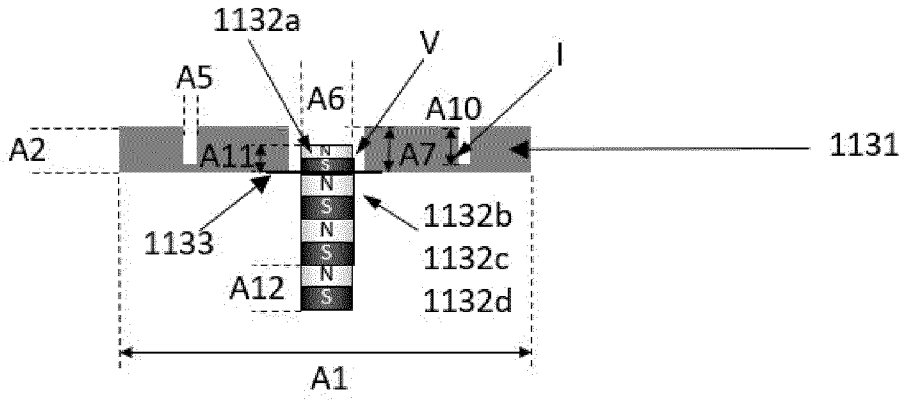

Fig. 11D

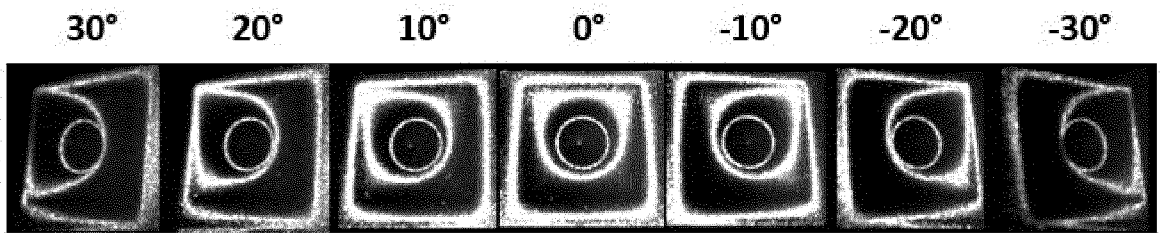

Fig. 12A

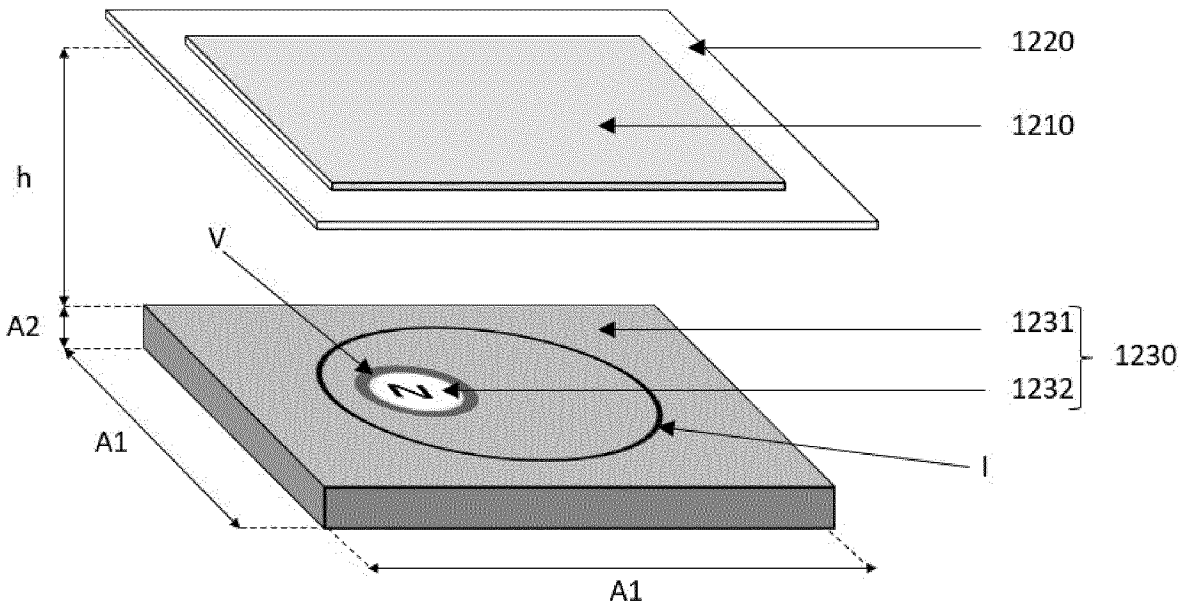

Fig. 12B

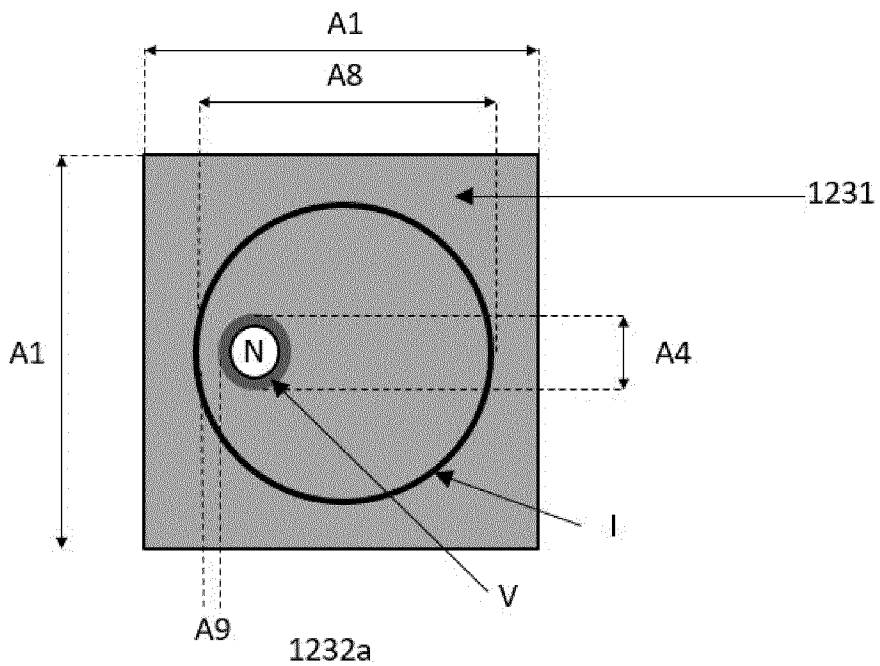

Fig. 12C

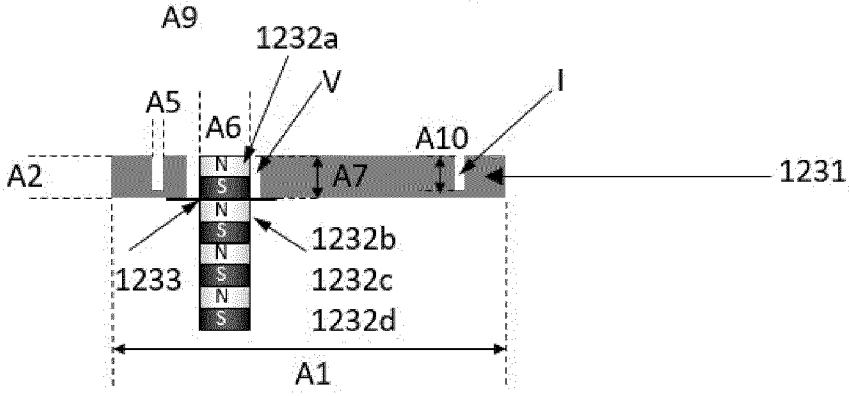

Fig. 12D

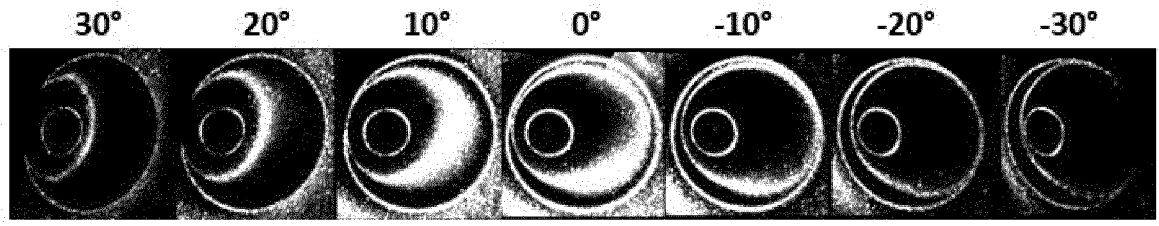

Fig. 13A

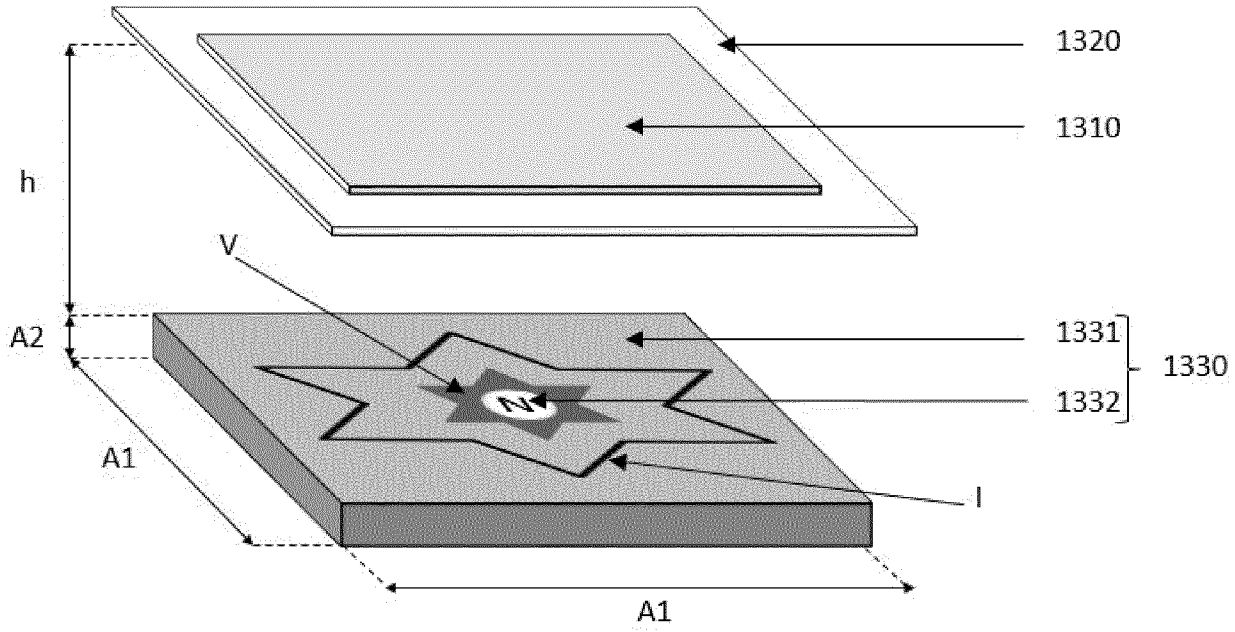

Fig. 13B

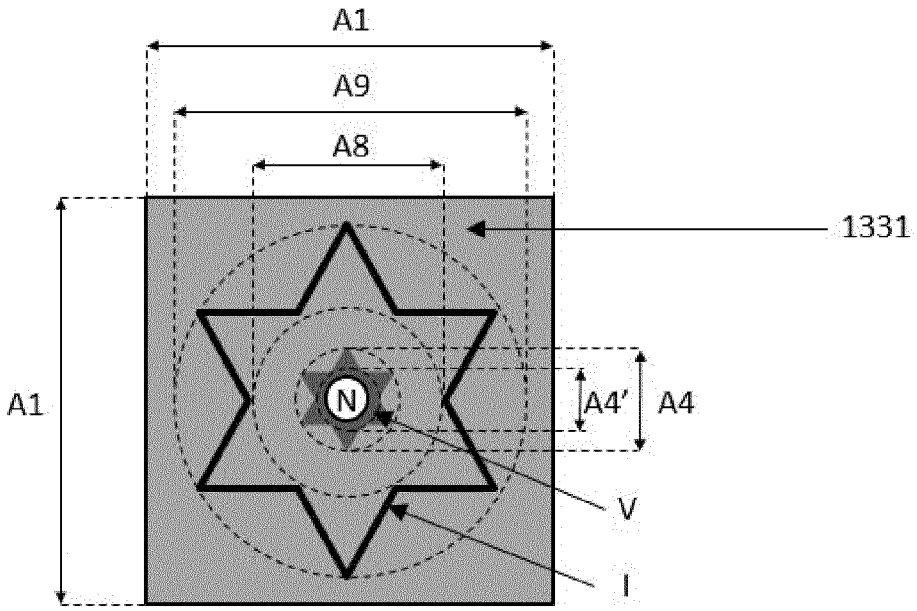

Fig. 13C

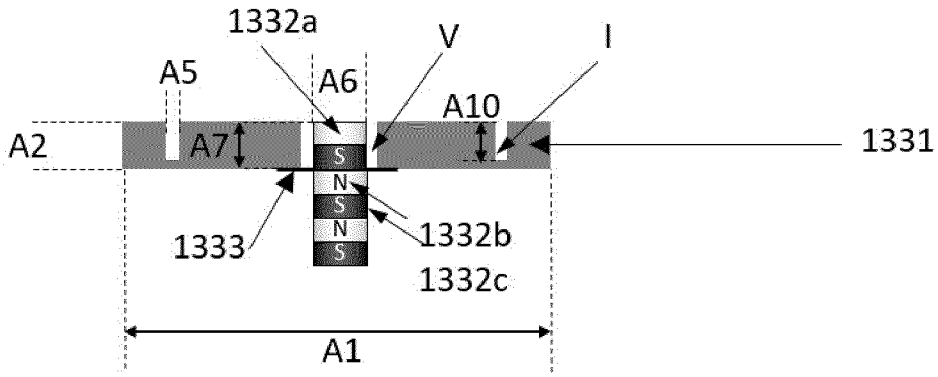

Fig. 13D

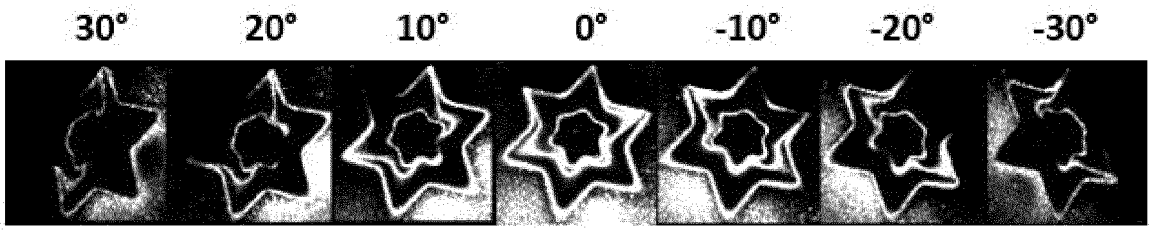

Fig. 14A

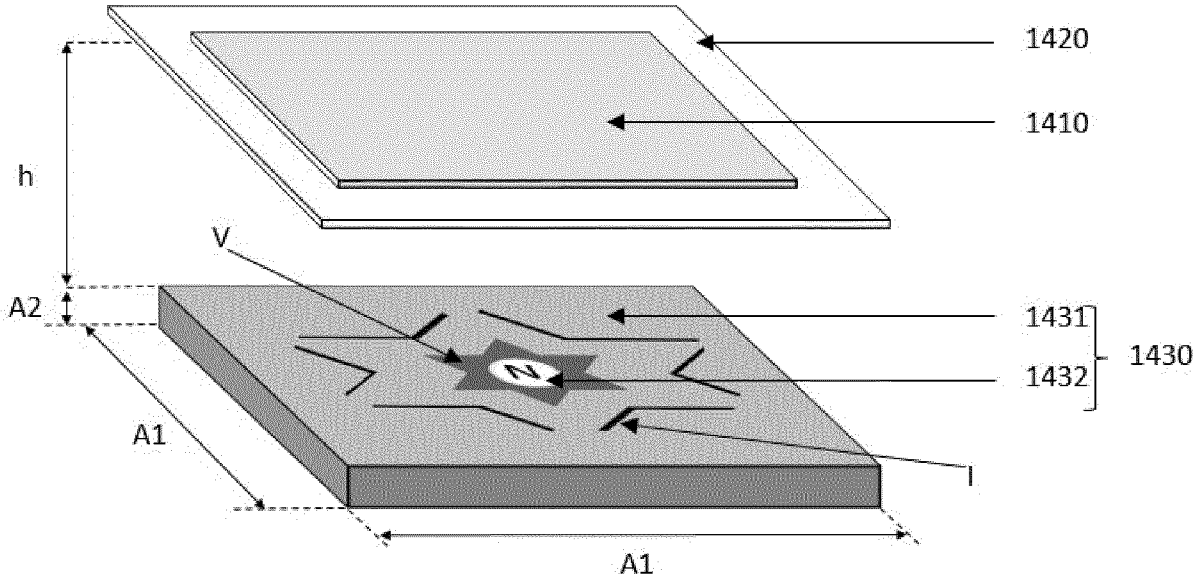

Fig. 14B

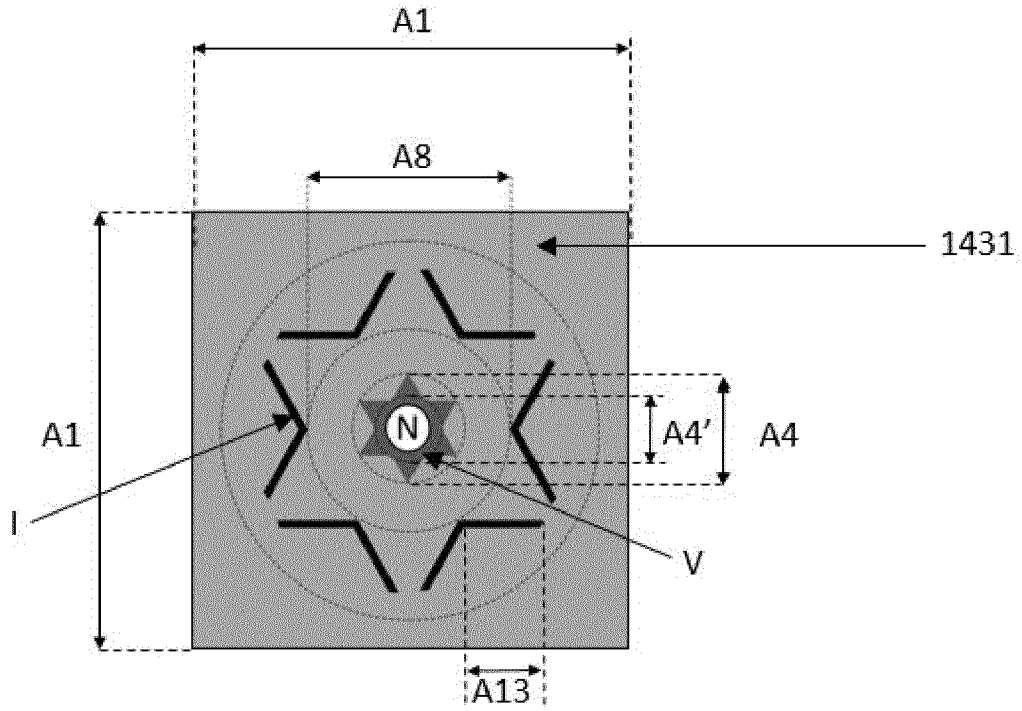

Fig. 14C

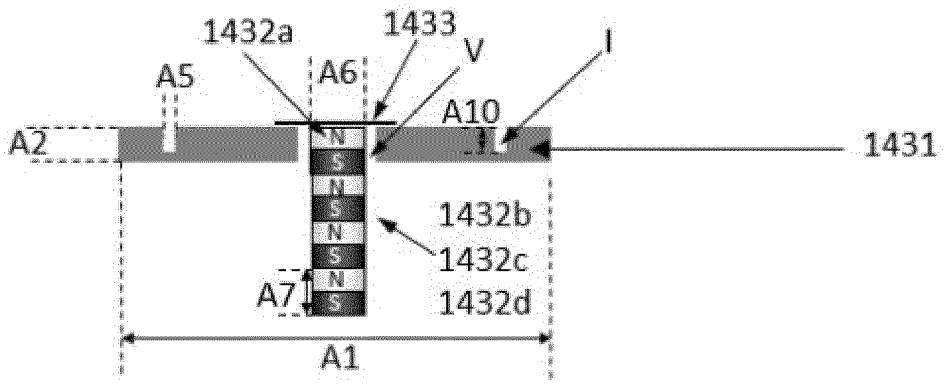
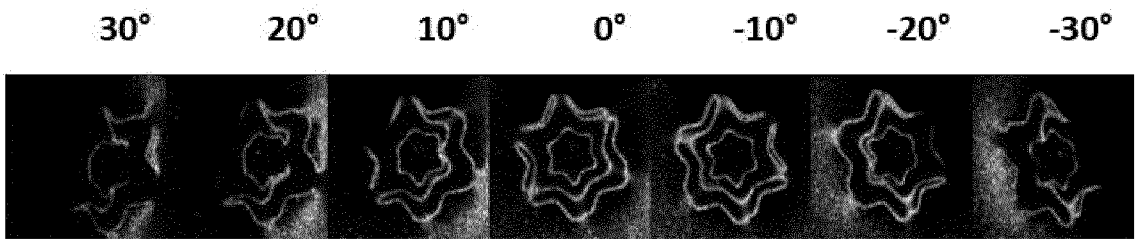
Fig. 14D