(No Model.) 2 Sheets—Sheet 1.

J. G. GARRISON.

ART OF PRODUCING COPPER OR OTHER LIKE PRINTING SURFACES.

No. 460,635. Patented Oct. 6, 1891.

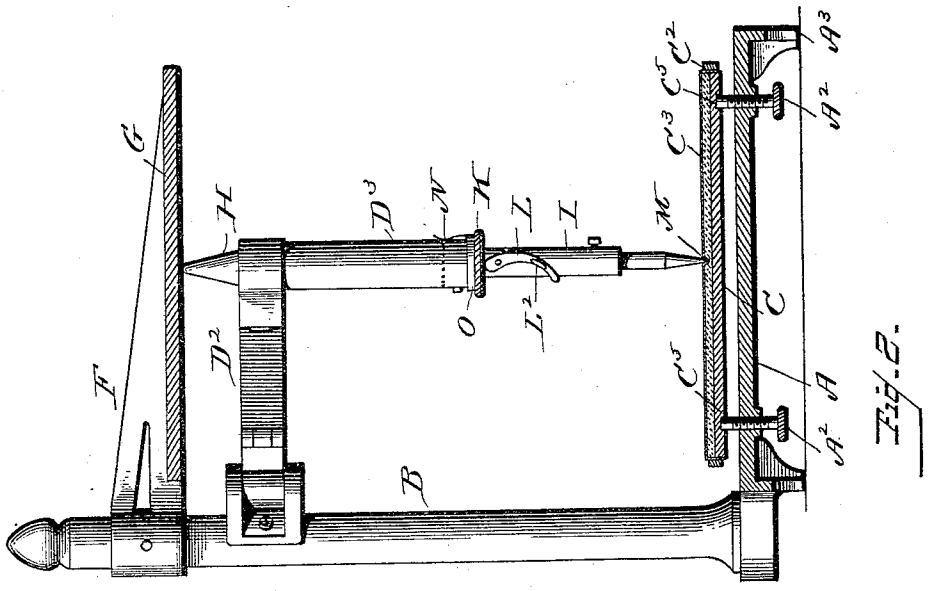

Fig. 2.

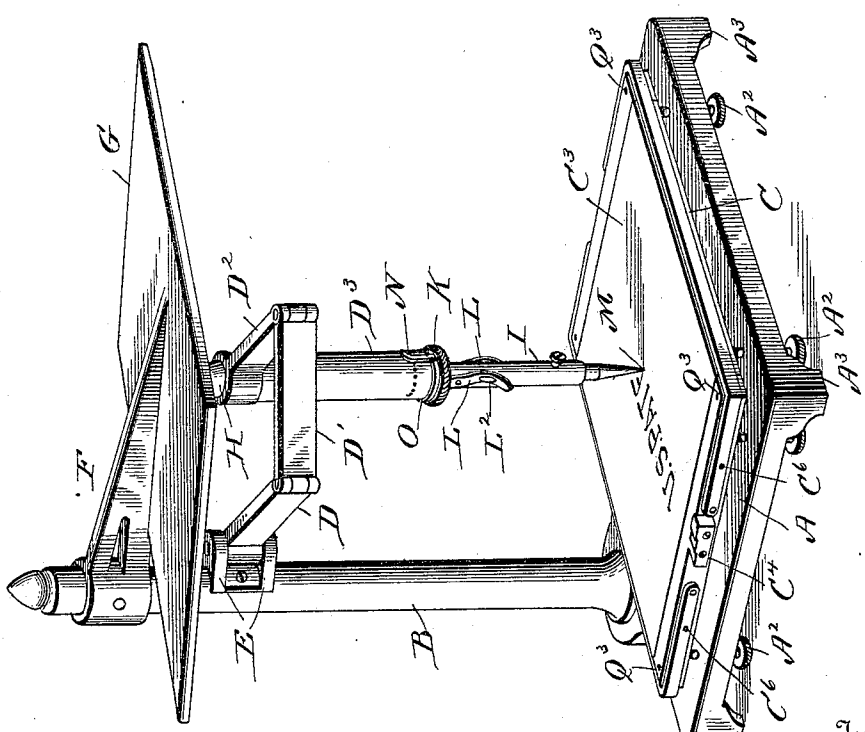

Fig. 1.

Witnesses

Wm. J. Sheiden

A. L. Hough

Inventor

John G. Garrison

By his Attorney

Franklin H. Hough

THE NORRIS PETERS CO., PHOTO-LITHO., WASHINGTON, D. C.

(No Model.) 2 Sheets—Sheet 2.

J. G. GARRISON.

ART OF PRODUCING COPPER OR OTHER LIKE PRINTING SURFACES.

No. 460,635. Patented Oct. 6, 1891.

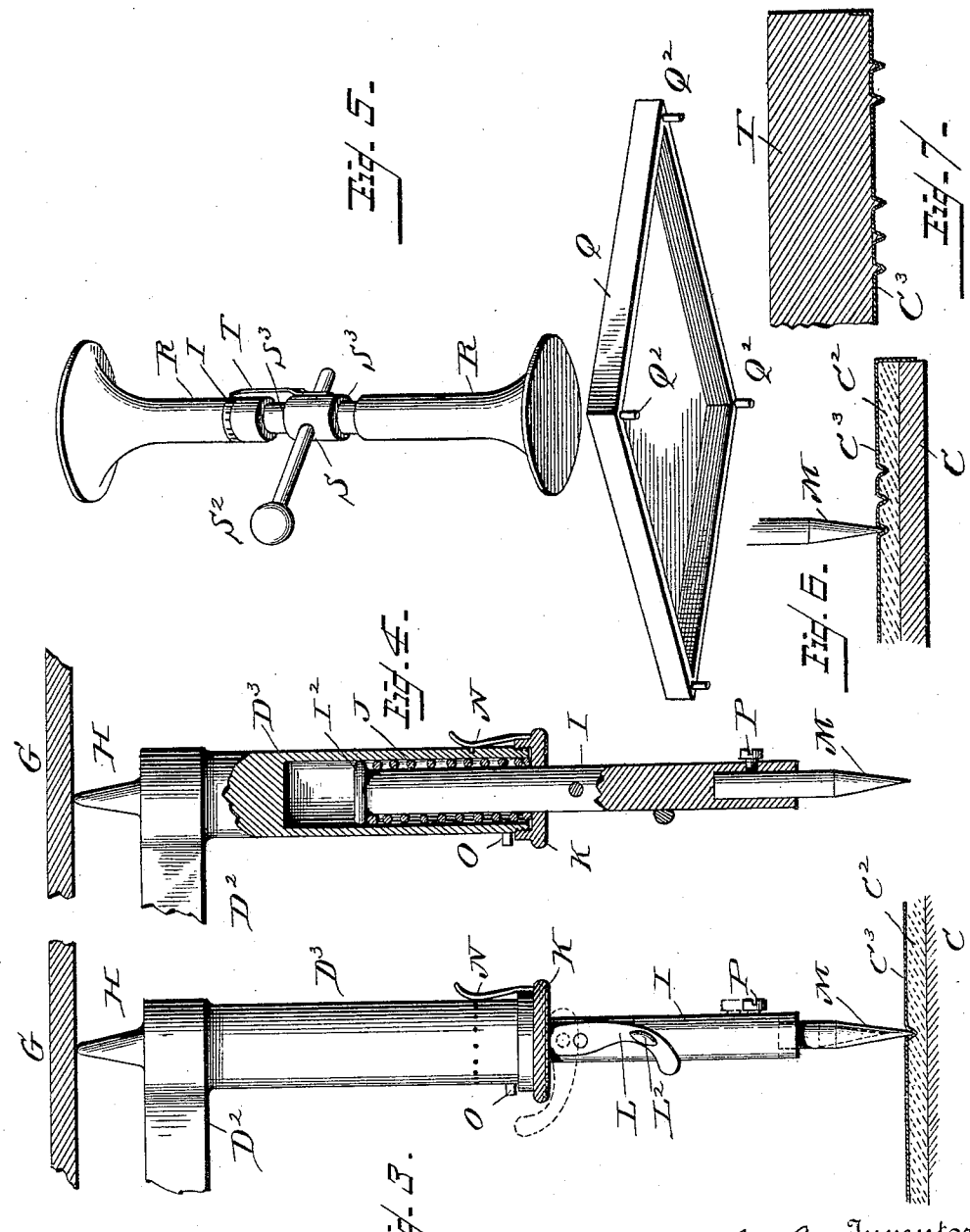

Witnesses
W. J. Freidau
A. L. Hough

Inventor
John G. Garrison
By his Attorney
Franklin H. Hough

THE NORRIS PETERS CO., PHOTO-LITHO., WASHINGTON, D. C.

UNITED STATES PATENT OFFICE.

JOHN G. GARRISON, OF DENVER, COLORADO.

ART OF PRODUCING COPPER OR OTHER LIKE PRINTING-SURFACES.

SPECIFICATION forming part of Letters Patent No. 460,635, dated October 6, 1891.

Application filed March 28, 1891. Serial No. 386,759. (No model.)

To all whom it may concern:

Be it known that I, JOHN G. GARRISON, a citizen of the United States, residing at Denver, in the county of Arapahoe and State of Colorado, have invented certain new and useful Improvements in the Art of Producing Copper or other Like Printing-Surfaces; and I do declare the following to be a full, clear, and exact description of the invention, such as will enable others skilled in the art to which it appertains to make and use the same, reference being had to the accompanying drawings, and to the letters of reference marked thereon, which form a part of this specification.

This invention relates to certain new and useful improvements in the art of producing printing-surfaces in copper or other hard metal or ductile and malleable material.

The invention has for its object, among others, to produce or make drawings, pictures, designs, sketches, characters, autographic letters, and type-faces for printing purposes and for reproducing copies of the foregoing and copies of engravings, photographs, and the like in metal for printing purposes without the necessity of either stereotyping or electrotyping.

The invention has for its further object the providing of mechanism whereby a predetermined and uniform pressure may be maintained upon the stylus or other tool which is employed in outlining the characters to be produced.

The invention further contemplates the use of type in producing impressions or indentations upon the surfacing metal, either in connection with or independently of the work produced by the tool or stylus.

The invention has for a further object to provide a means whereby the letters, figures, or other characters may be traced directly, so as to produce a negative printing-surface without the necessity of stereotyping or taking impressions in wax or other substances commonly employed in producing negative printing-surfaces.

To these ends and to such others as the invention may pertain the same consists in the peculiar construction and in the novel combination, arrangement, and adaptation of parts in the construction of the mechanism employed and in the successive steps taken in carrying my process into effect, all of which will be more fully hereinafter described, shown in the accompanying drawings, and then specifically defined in the appended claims.

The mechanism which I employ in carrying out my process is clearly illustrated in the accompanying drawings, which, with the letters of reference marked thereon, form a part of this specification, like letters indicating the same parts throughout the several views.

Before describing the several steps which I take in carrying my process into execution I will proceed to describe the mechanism which I employ, and in describing the process I will define the use of the same.

In the accompanying drawings, Figure 1 is a perspective view of a machine which is adapted for use in carrying my process into execution. Fig. 2 is a vertical transverse section of the same with parts shown in full lines. Fig. 3 is a side elevation of the tool-holder and tool retained thereby, the tool being shown as in the position which it assumes when in actual use. Fig. 4 is a sectional view of the same. Fig. 5 is a perspective view of the type-box and clamping-jack, the same being shown in their relative positions. Fig. 6 is a section through the copper-face or surface plate, the base-plate, and intermediate filling, with the point of the tool shown in position it occupies when in the act of outlining. Fig. 7 is an enlarged sectional detail of the surface-plate as it appears after the characters have been formed and the backing has been applied.

Reference now being had to the details of the drawings by letter, A represents the base-plate, which is provided at its corners with downwardly-extended legs or supports A^3, and at one side of the plate and cast integral therewith is a standard B. To the upper end of said standard, which extends for a considerable distance above the plate A, is rigidly secured the end of the arm or bracket F, which is cast integral with the flat hood or shelf G, which is of steel and is highly polished upon its under face.

Through the bed-plate A, at points adjacent to its corners, are passed the set-screws A^2, which serve as a support for the plate C, which plate is preferably made of steel and is provided with a flat and highly-polished upper surface.

Within the ears E, which project from the standard B at a point directly below the hood G, is hinged one end of the arm D, and hinged to the opposite end of said arm is one end of a like arm D′, which in turn has hinged to its opposite end the arm D^2, the said several hinged arms together forming a jointed arm capable of being freely moved in a horizontal plane, but incapable of vertical movement.

The arm or joint D^2 has cast integral therewith the downwardly-extended portion D^3 and the point H, said point H extending upward from the outer end of the arm D^2 and its free end bearing against the polished under face of the hood-plate G, the pressure of the said point against the face of the plate being at all times uniform. The distance from the under surface of the hood G to the upper surface of the plate C must be uniform at all points, and this is accomplished by the use of the set-screws A^2, which pass through the base-plate and at their upper ends enter the apertures c^5 in the lower face of the said plate C.

The lower end of the vertical portion D^3 of the arm D^2 is bored out for the reception of the shank of the tool-holder I, which has a flat head I^2 of greater diameter than the body of the tool-holder.

Spiral spring J surrounds the stylus or tool-holder I, its upper end pressing against the projecting head of tool-holder I and its lower end resting upon the inner surface of milled-edge rim K. Rim K is threaded to outside of lower edge of D^3, and the purposes are threefold: first, to form a base for spring J, so that the tool-holder I will go upward when released by double lever L; second, to provide different pressures of stylus or tool M on the plate C^3 without changing set-screws A^2 in base-plate A, and, third, to give a base for the double lever L to work upon. It will be noticed that its second purpose enables the operator to make different shades in the work by providing for more or less pressure upon tool M.

To rim K is attached a spring-point N, the tongue of which enters notches provided around the circumference of the lower end of D^3, and in this manner prevents the moving of the rim K when the tool-holder is rotated, and thereby changing the pressure upon holder I after it has been set. Below the notches in the portion D^3 a set-screw O is placed to prevent more than one revolution of the rim K. Lever L holds the tool M downward under uniform and unchanging pressure until it is raised.

To each side of the lever L is attached ears L^2, so that the lever itself may be more easily raised or lowered by the fingers.

The stylus, tool, or instrument M is held in place by the screw P. The tool M may be changed for another at any time by adjusting it over a desired portion of the graduated tool-setter C^4, Fig. 1. The tool M may be made with a round, oblong, flat, or other shaped point, or its point may carry on a pivot a small wheel bearing on its face projecting points or characters or have a uniform-lined face for forming outlines and similar desired results in the making of maps and other work. Said tool M may be made of steel, bone, or other suitable material, and its working point must be sufficiently smoothed and polished, so that it will not cut plate C^3 when indenting same.

Q of Fig. 5 shows a cast-metal box for holding type. It is intended to be constructed like a square-edged printer's chase, to which has been added a firm bottom. It may be used for reproducing an entire form of type or engravings, designs, and pictures or for indenting type-letters, figures, and engravings in connection with the other work of the machine. After the contents of box Q have been proved, adjusted, and "locked up" in the usual manner for printing purposes the box is inverted, as shown in Fig. 5, and placed over plate C^3, points Q^2 being so placed as to enter holes Q^3, Fig. 1. Pressure is then applied to the bottom of box Q for the purpose of indenting the type, characters, or designs into the plate C^3. This pressure is secured uniformly by placing between the bottom of the box Q and extending hood G a flared-ended standard R R, which is connected in the middle with center head S, from which project oppositely-threaded rods S^3 S^3. When a certain pressure has been decided upon, the indicator T, attached to center head S, is turned until it comes opposite to the point desired on a dial T^2 around the lower rim of upper section of the standard.

Other means than the type-box and jack described may be employed for depressing the type.

In carrying my process into execution, where it is proposed to use a base of type-metal or other hard material requiring the use of heat in order to secure a perfect union with the surface plate C^3 is desired the plate C is first covered to a uniform depth with wax, putty, wet or dry clay, earth, lead, card-board, paper, or other suitable material of a like nature—that is, a material which will readily separate and compress when a tool-point presses the plate C^3 into it and which will yet afford a sufficient resistance to maintain a firm foundation and serve to hold up the portions of the plate not acted upon by the tool. The material which is best suited for use as a backing or base for the plate C^3 is applied evenly to the plate C. Upon this prepared surface is then laid a sheet of copper, platinum, or other ductile material suited to the purpose, of any practical thickness and hardness, with its face downward. This sheet I term the "surface sheet." My preference is that it should be of copper and tinned upon the surface, upon which the sketch, design, or other work to be produced upon the plate is either outlined or pasted. The plate C^3 is rigidly held in place upon the plate C by the use of ordinary tympan-rims (see C^6, Fig. 1) used

upon most job-printing presses or by suitable cross-clamps. The plate C, together with the plate C^3 intact, is then placed in position upon set-screws A^2. The picture, map, design, or other like work which may have been previously outlined on the tin surface of the plate C^3 is then indented in the latter by the stylus M, one tool being substituted for another whenever necessary. After the work upon the surface sheet has been completed, if the substance or material used between it and the plate C is of a character adapted to sustain heat without injury to the surface plate, the latter is surrounded by type-high bars or with strips of iron or steel, and the usual method is then employed to make a perfect union of two metals—as, for instance, after the pasted copy (if such is used) has been removed, and if the surface sheet is of copper, tinner's acid is applied, a sheet of tin-foil is laid over the tinned face of the plate, and the indented copper plate C^3, the material underneath it C^2, and the plate C, all intact, are together heated until melted lead or type-metal when poured in to form the base will unite firmly with the surface plate below. The means commonly employed in stereotyping may be used to form a hollow base. The latter is planed off, so as to render it type-high, and a finished cut with a solid copper face is the result.

In case wax or other material likely to be destroyed by heat is used between the surface plate and the plate C the former is removed after the indentations have been completed, and the shell is backed in the same manner that electrotype-shells are finished.

To secure a cement or equivalent base, the surface plate, after being indented to form the face results desired, is allowed to remain upon the intervening material C^2. To secure still greater adherence than the cement may furnish, strips of the margin of the surface plate are raised, so as to mingle with the cement when poured in. Type-high bars are placed around it in the same manner as for a metal base, and into the box thus formed is poured a suitable adhering cement. The latter, when dry, is trimmed down evenly and is in readiness for use.

As the indented side of the surface plate, after being indented as desired, is identical with a matrix formed from a cut or type, it may be used in the same manner to produce stereotypes or electrotypes.

If for any reason it should be desired to secure in metal the face results of the surface plate after it is completed, a temporary base of plaster-of-paris or other like material may be used in a liquid state in the same manner as is provided for a cement base, and a stereotype or electrotype reverse matrix may be secured from its surface.

For fine-line work an even plate of lead one-fourth of an inch or less in thickness or other equivalent material of the required hardness and thickness is placed upon the plate C. A surface plate of copper or other ductile material is then fastened over this in the manner heretofore described. The tool M is then adjusted so as to cause it to indent the surface to a sufficient depth to secure a clear sharp result. As a uniform pressure upon the tool M is secured by the pressure of the upper end of the tool against the polished under surface of the hood G, it is only necessary to indent the surface plate sufficiently for printing purposes. Copper or hard and stiff substance of a like nature is perhaps the best suited for this work. After the sketch, design, or other result desired is completed the intervening material used between the plate C and the surface plate is removed, and the latter is backed in the same manner as an electrotype-shell. In case lead is used under the surface-sheet, it will be impracticable to use ordinary type, either in whole or in part, in producing this class of work. Steel type, however, may be used, as desired, by the use of the box Q and the jack R, the type being suitably locked within the said box and the box reversed and placed over the face of the surface plate C^3 and forced downward by the operation of the lever S of the jack, the upper end of the said jack bearing against the under surface of the hood G.

In some classes of fine work where a thin but hard surface plate is used no intervening material will be required between the surface-plate and the plate C, and in others a sheet of hard paper or card-board will give the desired results.

Engravings, drawings, photolithographs, and the like may be reproduced exactly for printing purposes by making them as thin as possible and pasting the pattern-face upward upon the surface plate and afterward indenting the lines, the adjusting-rim K affording every opportunity for light and heavy lines and shades.

In producing maps and other work of a like character, such as are partly composed of indented type-faces and partly of dotted lines, a soft and thin copper sheet is necessary, in order that the type may not be injured, as would be the case were a hard metal used when type-metal type were employed in making the indentations. Where in map-work it is desired to produce dotted or other sharp lines or other effects which can be produced by the same, a small wheel having upon its periphery the characters which it is desired to produce upon the plate is pivoted to the point of the stylus or tool M. This will be found to be of special use in running lines between States, indicating the routes of railways, and the like. In map and similar work it is perhaps preferable to first indent the names, figures, and other type results before proceeding with the work of tracing, which is done by the tool M.

Letters, characters, tracings, and the like may be indented or formed in a dark background by placing the face of the plate C^3

upward and indenting the same in reverse into the intervening material between the plate C^3 and the plate C. For convenience in work where the dark predominates the plate C^3 may also be placed face upward and the desired light portions depressed by the use of the tool-holder of the machine. The base is then added as heretofore described.

Having thus described my process in detail, I desire in conclusion to call especial attention to the fact that in printing from a surface prepared in accordance with my process the raised characters produced upon the copper face of the plate by the depressions upon its opposite side are used directly as a printing-surface in contradistinction to the processes in which the plate produced is used as a matrix.

I am aware that it has heretofore been proposed to produce a printing-surface by indenting the characters or outlines upon the face of a ductile metallic plate; but, in so far as I am aware, it has in all cases been proposed to indent the characters entirely through the plastic or yielding substance which is used as a backing for the ductile plate, the depth of the indentations being limited by contact with the polished base-plate beneath. I do not in this application contemplate such, as I have found that when the characters are indented in this manner that it is impossible to secure the best results, as when the ductile plate is forced by the stylus or other tool used into contact with the hard plate beneath the lines become flattened and all fine lines thus destroyed. I have therefore found it necessary that the downward movement of the stylus or other tool should be limited, so as not to permit the plate operated upon to be depressed through to the base-plate, and I have found that to produce the desired uniform depth of indentations that the work can not be done by any of the hand-operated tools heretofore used. By the use of the machine herein described it is evident that exact results will be at all times assured.

Having thus described my invention, what I claim to be new, and desire to secure by Letters Patent, is—

1. The herein-described improvement in producing metallic printing-surfaces, the same consisting in tracing the characters to a uniform depth into the face of a ductile horizontal metallic plate resting upon a base of softer material, the thickness of the said base being greater than the depth of the indentations to be produced upon the surface plate, substantially as and for the purpose described.

2. A tool for use in producing printing-surfaces upon metallic plates, the same consisting of a vertically-disposed stylus-holder adapted to move freely in a horizontal plane, but held against vertical movement by contact of its upper end with a fixed horizontal surface, a stylus or its equivalent adjustably secured within the tool-holder, and means for setting the same so as to indent the face of the plate to a predetermined depth, substantially as described.

3. The combination, with the base-plate A, provided with an upright B, of the arm hinged to the upright and carrying the tool-holder, a horizontal hood or plate forming a bearing for the upper end of the tool-holder, and means, substantially as described, for securing a stylus or other tool within the holder, substantially as and for the purpose described.

4. The combination, with the base-plate A, of the plate C, provided with tympan-rims, and the set-screws A^2, passed vertically through the base-plate A and forming an adjustable support for the plate C, substantially as and for the purpose described.

5. The combination, with the base portion, of the standard rising from one side thereof, the hood G, secured to the standard and extending parallel with the base portion, the arm hinged to the standard, the vertical portion D^3, carried by said arm, having an upward extension H, adapted to bear against the lower face of the hood and provided at its lower end with a chamber open at its lower end and provided with a screw-threaded cap K, the tool-holder I, fitted within said chamber and provided with a flat portion I^2 at its upper end, the spring J within the chamber, with one of its ends bearing against the head I^2 of the tool-holder and its opposite end bearing against the cap K, and the spring-lever N, carried by the cap K and having a pin adapted to engage openings formed in the portion D^3 and lock the said cap against rotation, as and for the purpose described.

6. The combination, with the portion D^3, the tool-holder seated therein, the spring J, and cap K, of the cam-levers L, pivoted to the tool-holder, one upon each side, and adapted to bear against the lower face of the cap at the lower end of the portion D^3 and force the tool-holder downward against the tension of the spring, substantially as and for the purpose described.

7. The combination, with the plate C, supported upon adjusting-screws and having openings Q^3 at its corners, of the box Q, having pins Q^2, adapted to engage said holes in the plate C, the hood G above and parallel with the plate C, the sectional jack R, having enlarged ends, as described, adapted to bear against the box and hood, respectively, the lever S^2 for operating the jack, and an indicator upon the face of the jack, adapted to designate the vertical adjustment of the same, substantially as and for the purpose described.

In testimony whereof I affix my signature in presence of two witnesses.

JOHN G. GARRISON.

Witnesses:
A. L. HOUGH,
FRANKLIN H. HOUGH.