Oct. 23, 1951 G. C. LENNOX 2,572,635

SEWING MACHINE

Filed June 7, 1947

Fig. 1.

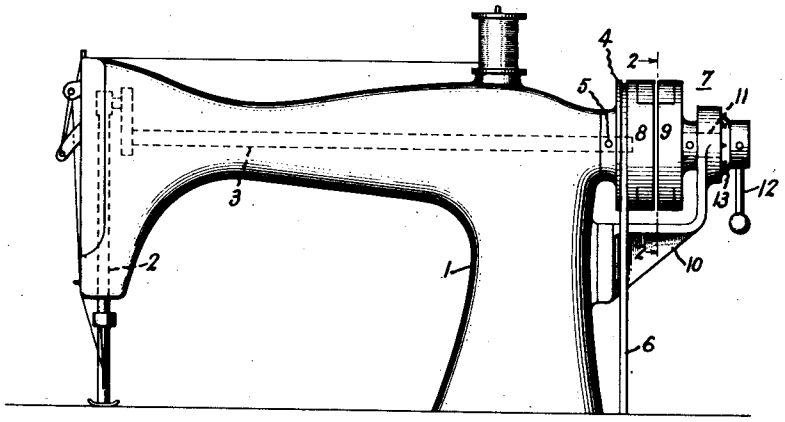

Fig. 2.

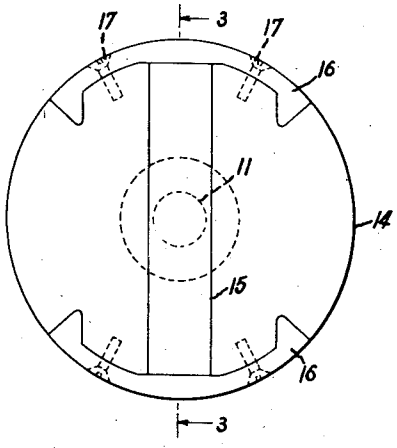

Fig. 3.

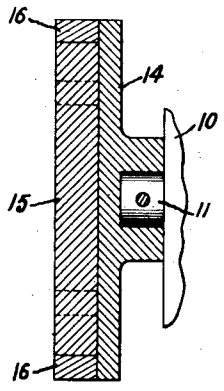

Inventor:
George C. Lennox,
by Charles Cohen
His Attorney.

Patented Oct. 23, 1951

2,572,635

UNITED STATES PATENT OFFICE

2,572,635

SEWING MACHINE

George C. Lennox, Salem, Mass., assignor to General Electric Company, a corporation of New York

Application June 7, 1947, Serial No. 753,303

3 Claims. (Cl. 112—219)

1

The present invention relates to sewing machines and more particularly to a magnetic device for bringing the needle or stitching mechanism of a sewing machine into a predetermined position of rest.

Sewing machine mechanisms in which the starting and stopping of the mechanism are operator controlled may come to rest in various different positions of the needle. Heretofore, it has been the common practice of operators to grasp the hand wheel of the machine and turn it to bring the actuating mechanism into a position where the work may be shifted from one position to another or tuned about the needle. Such practice has resulted in the lower efficiency of the operator and the loss of time is an item of considerable importance in production.

Although mechanisms including stop-motion devices previously have been devised for bringing the sewing machine to a predetermined position of rest, they have not been entirely satisfactory particularly when used in connection with high-speed, power-operated machines because of the stresses to which the parts are subjected each time the machine is stopped. Further, many sewing machine operations are only for short runs of the material and there is no particular need to bring the machine to a predetermined position of rest. When such stop-motion devices are employed for positioning mechanisms, the machine is unnecessarily subjected to shock and stress each time the power is disconnected, thereby weakening the parts and frequently resulting in unnecessary failures.

It is an object of the present invention to provide new and improved means for stopping a sewing machine mechanism in a predetermined position of rest.

Another object of the present invention is to provide new and improved magnetic means for stopping the needle of a sewing machine mechanism in a predetermined position of rest.

Still another object of the present invention is to provide new and improved magnetic means for stopping the needle of a sewing machine mechanism in a predetermined position of rest without subjecting the parts of the mechanism to shocks and stresses.

Further objects and advantages of my invention will become apparent as the following description proceeds and the features of novelty which characterize my invention will be pointed out with particularity in the claims annexed to and forming a part of this specification.

For a better understanding of my invention,

2

reference may be had to the accompanying drawing in which Fig. 1 is a front elevation of a sewing machine mechanism embodying the present invention. Fig. 2 is an end view of one of the cooperating magnetic members taken along the lines 2—2 of Fig. 1. Fig. 3 is a sectional view of the magnetic member taken along the line 3—3 of Fig. 2.

Referring to the drawing and more particularly to Fig. 1, there is illustrated a sewing machine mechanism which comprises a frame 1 in which a suitably guided vertically positioned needle-carrying shaft 2 reciprocates. The needle carrying shaft is actuated by a horizontally positioned rotating shaft 3 journaled in suitable bearings in frame 1 and connected to the reciprocating shaft 2 in any suitable manner to transmit rotary motion of shaft 3 to the reciprocating motion of shaft 2. A driving pulley 4 is fixedly attached to shaft 3 as, for example, by means of a set screw 5 and transmits rotary motion from any suitable power source (not shown) through a pulley belt 6 to the shaft 3.

In accordance with one aspect of my invention, a magnetic positioning or stop motion device 7 is illustrated in Fig. 1 as cooperating needle positioning and locating permanent magnetic members, the positioning magnet being fixed to an extended portion of shaft 3 and the locating magnet being fixed to the frame 1. Details of the positioning or stop motion device 7 will be described in detail hereafter in connection with Figs. 1, 2 and 3.

The magnetic positioning device 7 is illustrated in Fig. 1 as comprising a needle positioning permanent magnet rotor 8 attached to an extended portion of shaft 3 for rotation therewith and a locating permanent magnet member 9 positioned adjacent to the rotating magnetic member 8 and held in this position by means of a bracket arm 10 fixedly attached to the frame 1. The locating magnet 9 is fixedly attached to a rotatable shaft 11 suitably journaled in the bracket 10 and may be rotated by means of a hand lever 12 fixedly attached to the shaft 11. A tensioning device 13 positioned between the hand lever 12 and the bracket 11 provides a means for causing a frictional engagement between the bracket 10 and the hub of the locating magnet 9 thus providing against any turning movement of the magnet due to vibration, etc.

The positioning and locating magnet assemblies comprise a disk 14 of non-permeable material, as for example, plastic, wood, brass, etc. having a groove or slot across the diameter of the

disk to provide means for inserting or inlaying a permanent magnet 15. Cooperating recesses are provided at the circumference of the disk for positioning pole segments 16 of high permeability material adjacent the pole faces of the permanent magnet 15. The pole segments may be attached to the disk by means of machine screws 17. In this connection the magnetic circuit comprising the permanent magnet 15 and the pole segments 16 may be formed as an integral unit by casting or forming the parts entirely of some suitable permanent magnet material. With the magnetic circuit members being cast as an integral unit, a recess of suitable configuration should be formed in the disk 14 to receive the magnet. Of course, it will be understood that the positioning and locating magnet assemblies will be substantially duplicates of each other with respect to the magnetic circuit. In connection with the positioning magnet member 1, the disk 14 may be formed with the pulley 4 as an integral part of the disk 14 or the pulley 4 and the disk 14 may be formed separately and provided with means for separately attaching each member to the extending portion of shaft 3. The disk 14 of the locator magnet assembly will, of course, be formed with a hub portion to provide means for attaching the locator magnet assembly to the shaft 11 and additionally to provide a friction surface adjacent to bracket 10.

In operation the desirable features of my invention are obtained by shifting the hand lever 12 and, thereby, the locating magnet 9 to a position where the pole segments are in magnetic cooperation with the pole segments of the positioning magnet 8 while the needle is in the work. To provide for the needle stopping in a position out of the work, it is necessary only to turn the hand lever 12 through an arc of 180°. With the locator magnet in this position, the torque effect on the positioning magnet will cause it to rotate into a position of magnetic cooperation with the locator magnet thus positioning the needle out of work.

With a device such as I have just described, a slight hand manipulation by the operator provides for bringing the needle into a position of rest for turning or removing the work whichever may be desired.

A positioning device produced in accordance with my invention will find particular useful application in sewing machine operation where the elimination of unnecessary manual operations contribute to greater efficiency and production.

Although my invention has been disclosed hereinabove as being applied to sewing machines. It is not limited to such an application since it is obvious that it would be equally as effective as a positioning device for other types of rotating machinery.

What I claim as new and desire to secure by Letters Patent of the United States is:

1. In combination with a sewing machine mechanism including a rotating shaft and a needle reciprocating shaft actuated thereby, a magnetic needle positioning device comprising a pair of juxtaposed cooperating disk members including permanent magnets recessed across the diameter of said members, one of said disk members being fixedly attached to said rotating shaft, the other of said disk members being manually adjustable to a position determining the rest position of said rotating shaft.

2. In combination with a sewing machine mechanism including a rotating shaft and a needle reciprocating shaft actuated thereby, a magnetic needle positioning device comprising a pair of juxtaposed cooperating disk members of magnetically non-permeable material having permanent magnets recessed across the diameter of said members, one of said members being fixedly attached to said rotating shaft, the other of said disk members being manually adjustable to a position determining the rest position of said rotating shaft.

3. In combination with a sewing machine mechanism including a rotating shaft and a needle reciprocating shaft actuated thereby, a needle positioning device comprising a pair of cooperating disk members including permanent magnets recessed across the diameter of said members, one of said members being fixedly attached to said rotating shaft, the other of said disk members being supported in juxtaposition with the cooperating disk member and manually adjustable to determine the position of rest of said rotating shaft.

GEORGE C. LENNOX.

REFERENCES CITED

The following references are of record in the file of this patent:

UNITED STATES PATENTS

Number	Name	Date
1,943,303	Foster	Jan. 16, 1934
2,066,131	White	Dec. 29, 1936
2,099,849	Holmes	Nov. 23, 1937
2,334,822	Hertzberger	Nov. 23, 1943
2,411,126	Burnham	Nov. 12, 1946