April 29, 1930. O. A. FLAGSTAD ET AL 1,756,245

DENTAL CROWN REMOVER

Filed Oct. 10, 1927 2 Sheets-Sheet 1

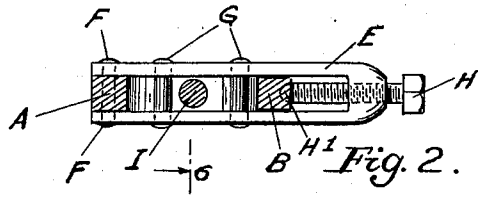

Fig. 2.

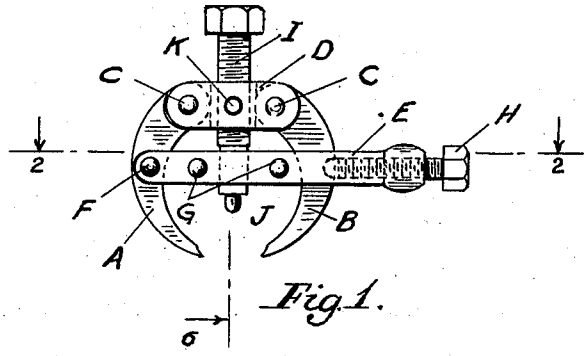

Fig. 1.

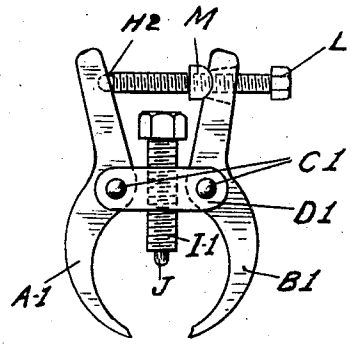

Fig. 3.

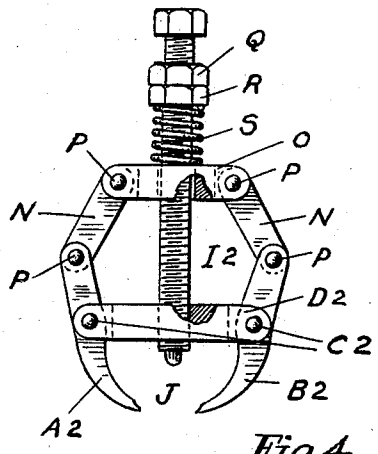

Fig. 4.

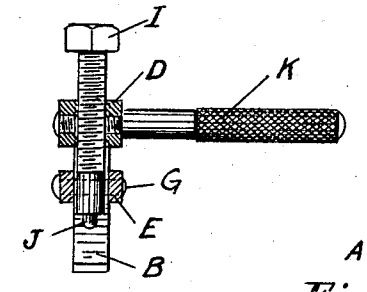

Fig. 6

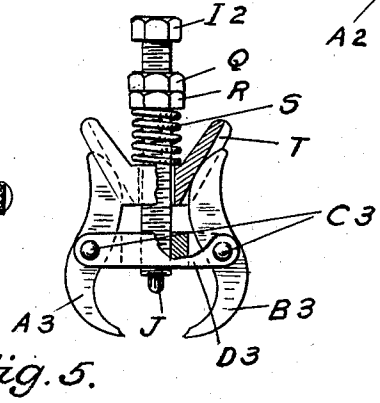

Fig. 5.

INVENTORS
O. A. FLAGSTAD
RUEBEN G. LEE

BY

ATTORNEY

April 29, 1930. O. A. FLAGSTAD ET AL 1,756,245

DENTAL CROWN REMOVER

Filed Oct. 10, 1927 2 Sheets-Sheet 2

Fig. 9.

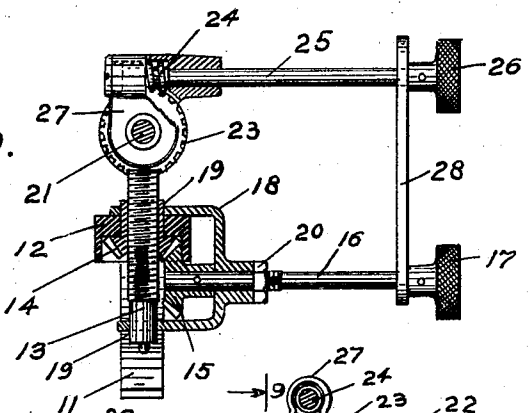

Fig. 8.

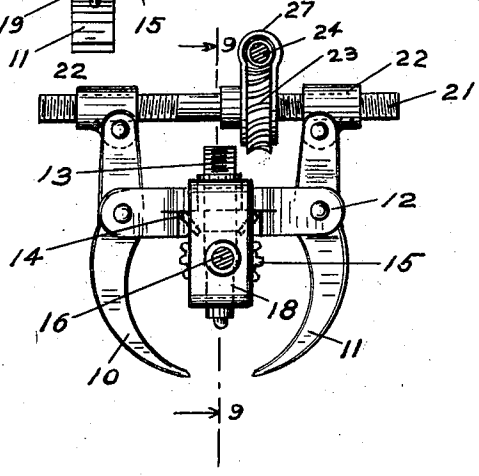

Fig. 7.

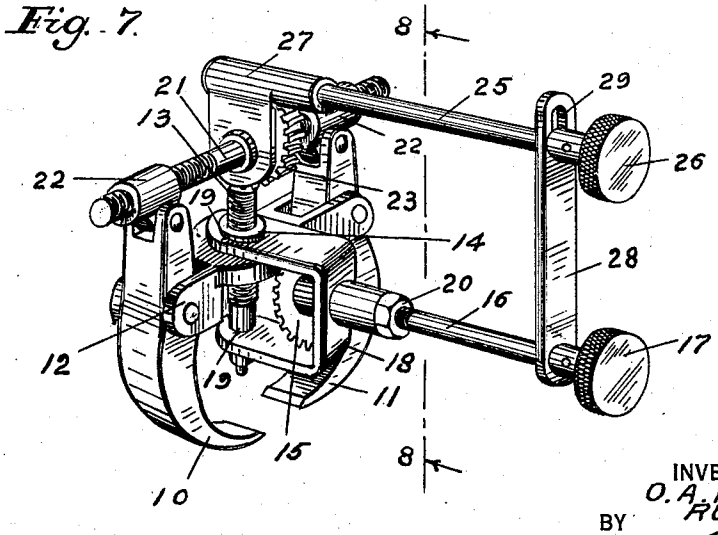

INVENTORS
O. A. FLAGSTAD
RUEBEN G. LEE
BY
ATTORNEY

Patented Apr. 29, 1930 1,756,245

UNITED STATES PATENT OFFICE

OSCAR A. FLAGSTAD, OF MINNEAPOLIS, AND RUEBEN G. LEE, OF HOFFMAN, MINNESOTA

DENTAL CROWN REMOVER

Application filed October 10, 1927. Serial No. 225,298.

This invention relates to dental crown removers, and the primary object is to provide means of a novel, efficient and practical nature for removing the gold crowns of teeth without destroying their usefulness, so that a crown may be replaced upon the tooth after the latter has been treated or repaired, as is frequently necessary. Further and more specific objects will be disclosed in the course of the following specification, reference being had to the accompanying drawings, wherein:

Fig. 1 is an enlarged elevation of a preferred form of our improved crown remover.

Fig. 2 is a sectional plan view on the line 2—2 in Fig. 1.

Fig. 3 is an elevation of a modified form of the device as shown in Fig. 1.

Fig. 4 is a similar elevation showing a further modification of the device, and with fractional parts broken away.

Fig. 5 is an elevation of a still further modified form of the device, with fractional parts broken away and in section.

Fig. 6 is a central sectional elevation of the crown remover as shown in Fig. 1 and on the line 6—6 in that figure.

Fig. 7 is a greatly enlarged perspective view of a still further modified form of the device.

Fig. 8 is a sectional elevation as on the line 8—8 in Fig. 7.

Fig. 9 is a sectional elevation as on the line 9—9 in Fig. 8.

Referring to the drawings more particularly and by reference characters, the device shown in Figs. 1, 2 and 6, will first be described as follows:

A and B designate a pair of jaws or claws the lower ends of which are so formed that they may grip the crown to be removed, or may be engaged under the lower edges of the crown if so desired. The upper ends of the jaws are pivoted, as at C, in the outer bifurcated ends of a cross bar D. A forked bar or yoke E is pivoted, as at F, to the jaw A and slidably guides the jaw B. The arms of the yoke E are preferably connected by pins G, and a set screw H is threaded in the end of the yoke for engagement in a recess H^1, for forcing the jaws A and B together in a clamp action upon the crown. The cross bar D is provided, with a forcing screw I, having a pin J formed at its lower end, which extends into a hole, that has previously been drilled in the face of the crown, to engage against the top of the tooth. It will thus be seen that after the crown has first been drilled to provide a hole for the pin J, the jaws A, B are clamped upon the crown and as the screw I is forced down upon the tooth the crown will be freed from the cement by which it is secured to the tooth. In order that the device may be more conveniently manipulated or held in place by the dentist it may be provided with a handle K (see Figs. 1 and 6).

In the modification shown in Fig. 3, a pair of jaws A^1 and B^1 are pivoted, as at C^1, to a connecting link D^1, which accommodates a forcing screw I^1 in the same manner as the link D retains the screw I in Figs. 1 and 2. In this device the jaws are forced against the crown by a screw L that spreads the jaw portions above the fulcrums C^1. This screw L threads in a lug M that is free to rock on the member B^1, while the other end of the screw engages the member A^1, as at H^2.

The device shown in Fig. 4 has parts A^2, B^2, C^2, D^2, and I^2, that correspond generally to the parts A^1, B^1, C^1, D^1 and I^1 in Fig. 3. In this instance, however, the upper ends of the jaw members are forcibly spread by a mechanism including three links N and O, pivotally connected to each other and to the jaws as at P. The tooth engaging screw I^2, in this case, is relatively long, is provided with a pair of nuts Q and R, and is further provided, between the nut R and the link O, with a compression spring S. The nut Q serves as a lock nut for the nut R which, when screwed down on the screw I^2, increases the clamping pressure of the jaws upon the crown. When this device is applied to a crown, it will be noted that as the forcing screw I^2, which is threaded in D^2, is screwed down, it will also increase the tension on the spring S, thus tightening the clamp on the crown. As the working stroke of the screw is very short it will not excessively increase the clamping action, but, on the other hand, it will materially increase the clamping grip at the moment

most desired, namely, when the crown is being forced from the cement anchorage.

In the structure shown in Fig. 5, the parts A^3, B^3, C^3, D^3, I^2, Q, R, and S are all substantially the same as shown in Fig. 4. In this case, however, the toggle mechanism N—P is substituted by a wedge member T, which is forced down, under the screw action, to spread the upper ends and close the grip ends of the jaws.

The device shown in Figs. 7–9, while more complicated than the others described, is particularly valuable in that it may be operated by the dentist entirely from outside of the patient's mouth.

The jaws 10 and 11 are pivoted in the bifurcated ends of a link member 12. The forcing screw 13 does not rotate, in this case, but is moved up and down by a bevel pinion 14 in which it is threaded, and which in turn is journaled with a bridge link 12. The pinion 14 meshes with a pinion 15 carried on a shaft 16 having a turning head or knob 17. The shaft 16 is journaled in a yoke 18, the arms of which are trunnioned, as at 19, so that the shaft 16 may be swung from one side to another in the patient's mouth as may be found necessary. A lock nut 20 may be used to secure the shaft 16 with respect to the yoke 18.

The jaws 10—11 are opened and closed by a reversely threaded screw 21, that screws into a pair of collars 22 that are pivotally carried by the upper ends of the jaws. The screw 21 has a worm gear 23, driven by a worm 24 upon the inner end of a shaft 25 having a turning knob 26 at its outer end. The worm 24 and shaft 25 are held in operative position by a bearing member 27 that is carried on the screw 21. The outer ends of the shafts 16 and 25 are preferably connected by a link member 28, one end of which is provided with a slot 29 to permit some play, for adjustments, for instance, when the shaft 16 is moved toward either side. It will thus be seen that the jaws 10—11 are opened and closed by the knob 26, and that the actual crown removing operation is effected through turning of the knob 17.

It is understood that suitable modifications may be made in the general design and structural details of the invention as herein shown and described, provided, however, that said modifications come within the spirit and scope of the appended claims.

Having now therefore fully shown and described our invention, what we claim to be new and desire to protect by Letters Patent is:

1. A dental crown remover comprising a pair of jaws adapted to grip the sides of the crown, a link pivotally connecting the jaws, a tooth engaging screw threaded in and operating through the link between the jaws, and yieldable means associated with said screw for effecting a clamping action to the jaws.

2. A dental crown remover comprising a pair of jaws adapted to grip the sides of the crown, a link pivotally connecting the jaws, a tooth engaging screw operating through the link between the jaws, and means yieldably associated with the said screw for effecting a clamping action to the jaws, and to cushion the clamping action of the screw upon the jaws.

3. A dental crown remover comprising a pair of jaws adapted to grip the sides of the crown, a link pivotally connecting the jaws, a tooth engaging screw operating through the link between the jaws, and means associated with the said screw for effecting a clamping action to the jaws, whereby the screw will be advanced and the jaws will be closed simultaneously, said means including a spring which will cushion the clamping action of the jaws upon the crown.

4. A dental crown remover comprising a pair of jaws adapted to grip the sides of the crown, a link and a lever acting mechanism connecting the jaws, a screw threaded to screw in said link and between the jaws, and means including an adjustable spring on the screw for engaging the mechanism to clamp the jaws upon a crown.

5. A dental crown remover comprising a pair of jaws adapted to grip the sides of the crown, a transversely disposed link connecting at its ends to the jaws, a screw threaded in the link for engagement with a tooth under the crown, and means adjustable independently of or together with the screw, for effecting a clamping action to the jaws.

6. A dental crown remover comprising a pair of jaws adapted to grip the sides of the crown, a link connecting the jaws, a screw threaded in the link for engagement with a tooth under the crown, and means adjustable independently of or together with the screw, for effecting a clamping action to the jaws, said means including a spring, and a member threaded on the screw.

7. A dental crown remover comprising a pair of jaws adapted to grip the sides of the crown, a link connecting the jaws, a screw threaded in the link for engagement with a tooth under the crown, and means adjustable independently of or together with the screw, for effecting a clamping action to the jaws, said means including a wedge member operative against the jaws, and a nut on the screw for moving the wedge.

8. A dental crown remover comprising a pair of jaws adapted to grip the sides of the crown, a link connecting the jaws, a screw threaded in the link for engagement with a tooth under the crown, and means adjustable independently of or together with the screw, for effecting a clamping action to the jaws,

said means including a spring, a nut on the screw, and a second nut for locking engagement with the first mentioned nut.

In testimony whereof, we affix our signatures.

OSCAR A. FLAGSTAD.
RUEBEN G. LEE.