Sept. 22, 1970 A. M. ZAK 3,530,428

ELECTRICAL TERMINAL

Filed March 28, 1966 2 Sheets-Sheet 1

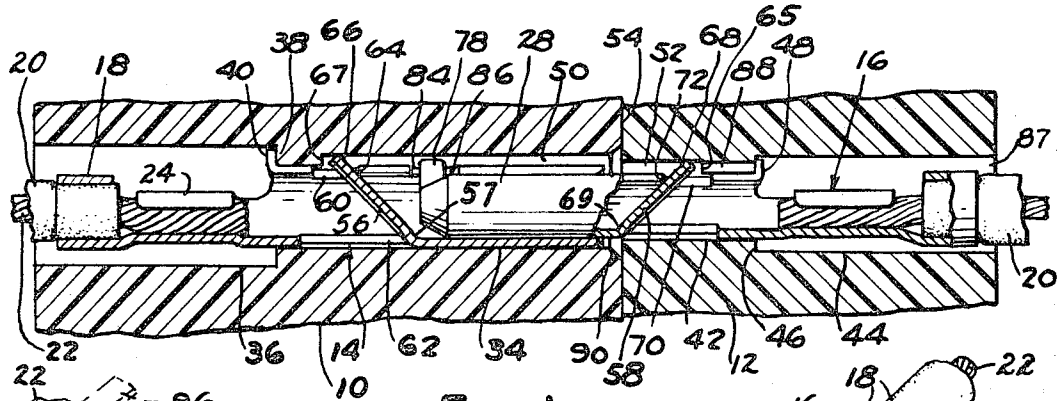

FIG. 1

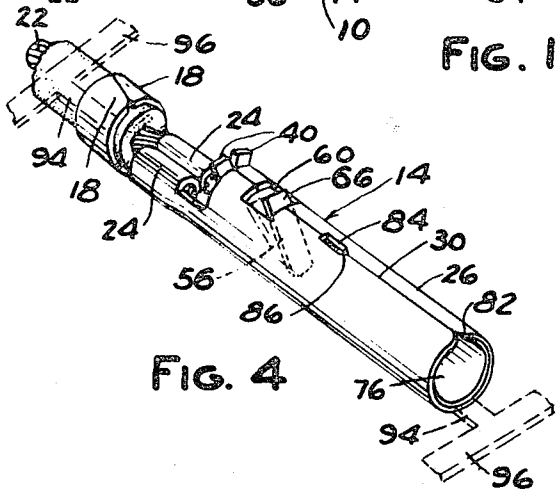

FIG. 4

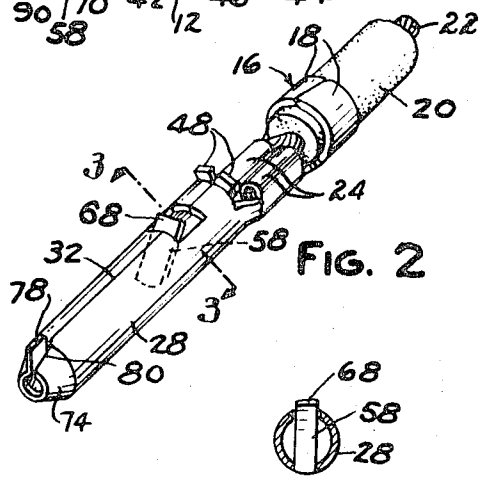

FIG. 2

FIG. 3

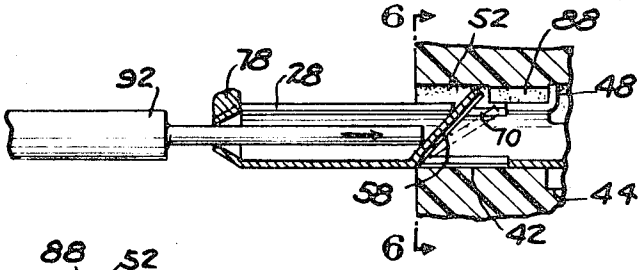

FIG. 5

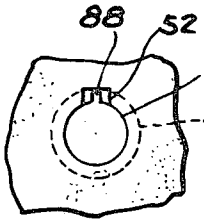

FIG. 6

INVENTOR.
ALFRED M. ZAK
BY
Barnes, Kisselle, Raisch & Choate
ATTORNEYS

ELECTRICAL TERMINAL

Filed March 28, 1966 2 Sheets-Sheet 2

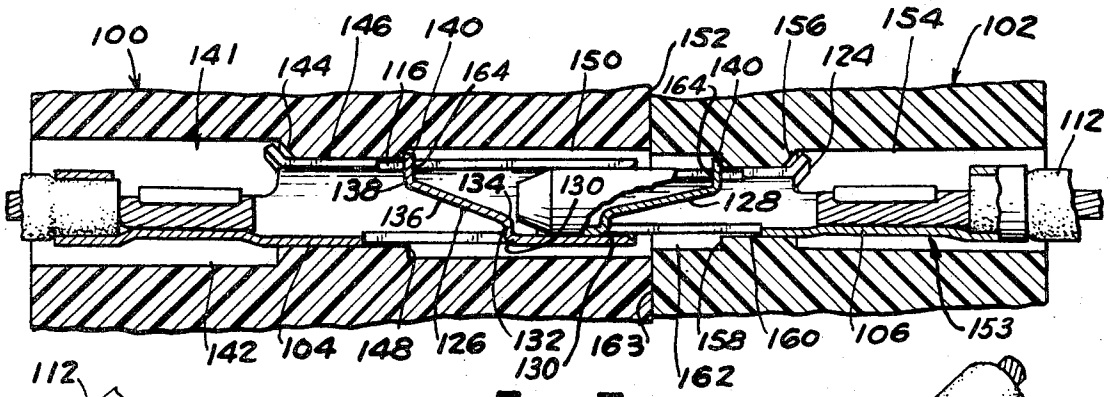

FIG. 7

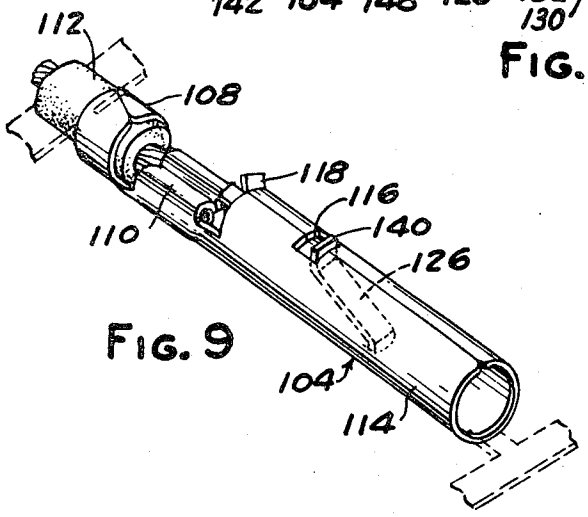

FIG. 9

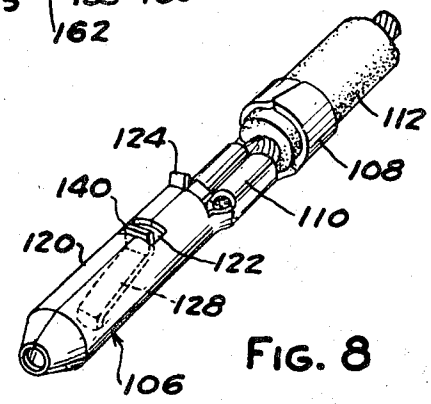

FIG. 8

FIG. 10

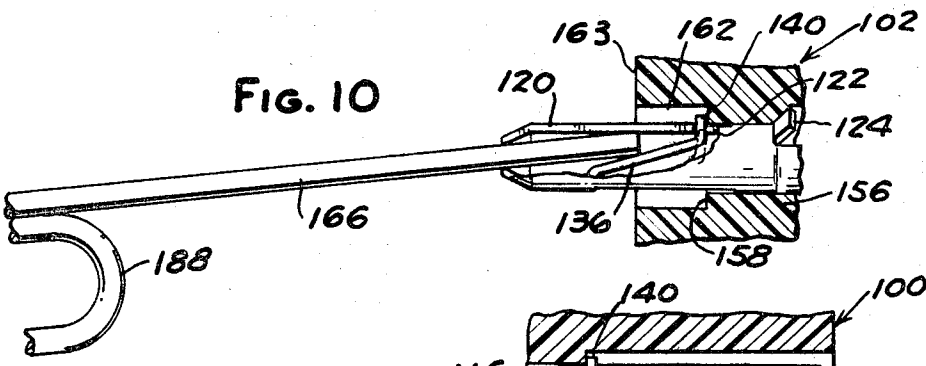

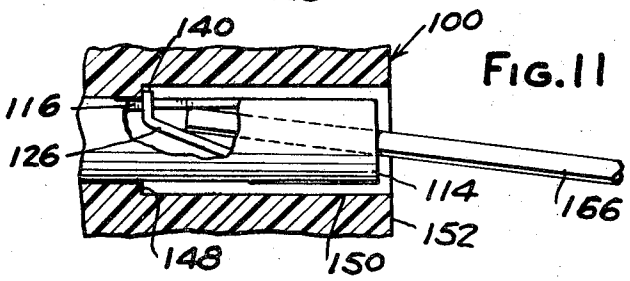

FIG. 11

INVENTOR.
ALFRED M. ZAK
BY
Barnes, Kisselle, Raisch & Choate
ATTORNEYS

United States Patent Office

3,530,428

Patented Sept. 22, 1970

1

3,530,428
ELECTRICAL TERMINAL

Alfred M. Zak, 6110 Casmere Ave., Detroit, Mich. 48212

Continuation-in-part of application Ser. No. 506,657, Nov. 8, 1965. This application Mar. 28, 1966, Ser. No. 537,976

Int. Cl. H01r *13/42*

U.S. Cl. 339—217 7 Claims

This application is a continuation-in-part of my prior co-pending application Ser. No. 506,657, filed Nov. 8, 1965, now U.S. Pat. 3,325,775.

This invention relates to electrical connectors and more particularly to electrical terminal blocks and terminal contacts used therewith.

In many industrial fields, for example, automotive, aircraft and appliance, the use of a great number of disconnectible electrical conductors has become very prevalent. Usually the disconnect features takes the form of a pair of terminal blocks in which many male and female terminal contacts are arranged such that they can be telescopically engaged and disengaged. Because of space limitations in many instances, the sizes of such terminals have by necessity become progressively smaller, and the problems encountered have become correspondingly greater. As the size (the diameter) of the terminal is reduced, the sheet metal from which the terminal is fabricated is likewise reduced in thickness and with extremely thin sheet metal portions of the terminal become quite flimsy. Even with such small diameter terminals there remains the necessity of providing a terminal construction which insures good contact between the telescoping terminal members and which at the same time enables the terminals to be solidly anchored within a terminal block, so they will not collapse or distort upon connecting or separating the terminal blocks.

It is accordingly an object of this invention to provide a terminal construction which is admirably suited for fabrication in small sizes and which at the same time is designed so that it can be solidly anchored within a terminal block with the application of relatively little pressure.

A further object of the invention resides in the provision of a terminal which is designed such that it can be economically produced in progressive dies and after forming, a plurality of such terminals, connected to a carrier strip, can be easily handled and fed to and from a reel.

A further object of the invention resides in the provision of a terminal construction which assures good electrical contact between the terminal members and is designed to hold tightly without collapsing when telescopically engaged.

In the drawings.

FIG. 1 is a fragmentary sectional view of a pair of terminal blocks provided with male and female terminals of the present invention, the terminals being shown partly broken away.

FIG. 2 is a perspective view of the male terminal.

FIG. 3 is a sectional view taken along the line 3—3 of FIG. 2.

FIG. 4 is a perspective view of the female terminal.

FIG. 5 is a fragmentary sectional view showing the manner in which the terminal of the present invention can be released from within its terminal block.

FIG. 6 is a fragmentary end view of one terminal block as viewed along the line 6—6 of FIG. 5 with the terminal removed.

FIG. 7 is a fragmentary sectional view similar to FIG. 1 and showing a modified form of terminal construction.

FIG. 8 is a perspective view of the male terminal shown in FIG. 7.

2

FIG. 9 is a perspective view of the female terminal shown in FIG. 7.

FIGS. 10 and 11 are fragmentary sectional views showing the manner in which the male and female terminal members illustrated in FIG. 7 can be released from within their respective terminal blocks.

In FIG. 1 a pair of terminal blocks **10** and **12** are illustrated. As is conventional, these terminal blocks are formed of an electrical insulating material such as Bakelite. Within block **10** there is arranged a female contact terminal **14**, and within block **12** there is arranged a male contact terminal member **16**. These two terminal members are shown in perspective in FIGS. 4 and 2 respectively. As illustrated, both terminals are of generally cylindrical shape and are adapted to be formed from flat sheet metal in progressive dies. At their outer ends each terminal is formed with a pair of tabs **18** which are adapted to be crimped around the insulating coating **20** of a stranded wire conductor **22**. Each terminal is also formed with a second pair of tabs **24** spaced axially from tabs **18**, tabs **24** being adapted to be crimped over the bared end of the stranded conductor **22** to provide good electrical contact between the terminal and the conductor.

Terminal **14** is formed with a cylindrical body portion **26** and terminal **16** is formed with a cylindrical body portion **28**. The inner diameter of the body portion **26** of terminal **14** is dimensioned relative to the outer diameter of the body portion **28** of terminal **16** such that they have a slight interference fit. For example, in a terminal construction wherein the outer diameter of body portion **28** is about .093 inch, the nominal inner diameter of body portion **26** may be about .003 inch less, so that the insertion of body portion **28** into the body portion **26** requires a slight circumferential expansion of body portion **26**. The sheet metal from which such terminals are formed has at least a slight degree of resilience, so that the interference fit will provide good electrical contact between the two terminals. The axially extending parting line between the contacting or near contacting longitudinal edges of terminal **14** is indicated at **30** and the corresponding parting line on terminal **16** is indicated at **32**.

Terminal block **10** is fashioned with a bore **34** dimensioned to receive the cylindrical body portion **26** of terminal **14** and a counterbore **36** dimensioned to receive the enlarged outer end of terminal **14** at the tabs **18**. These two bores are separated by a shoulder **38**. The body portion **26** of terminal **14** is fashioned with a pair of relatively rigid radially outwardly extending lugs **40** that are adapted to abut against shoulder **38** and thus limit movement of terminal **14** in a direction inwardly of block **10**, that is, in a direction toward the right in FIG. 1.

Terminal block **12** is fashioned with a cylindrical socket **42** adapted to receive the cylindrical body portion **28** of terminal **16** with a rather close fit and a counterbore **44** adapted to receive the enlarged outer end of terminal **16** at tabs **18**. The junction between these two bores defines a shoulder **46** which is adapted to be engaged by lugs **48** on terminal **16** to limit the extent to which terminal **16** can move in a direction inwardly of terminal block **12**, that is, in a direction to the left as viewed in FIG. 1.

Bore **34** is formed at one side thereof with an axially extending recess or slot **50**, and bore **46** is likewise formed with a longitudinally extending recess or slot **52**. These slots extend to the inner end faces of the terminal blocks, as indicated at **54**, which faces are adapted to be brought into abutting relation when the terminals are telescopically engaged. Slot **50** accommodates a tab **56**, and slot **52** accommodates a tab **58**. The construction and function of each of these tabs is the same, and for this reason only tab **56** will be described in detail. Tab **56** is struck inwardly from the wall of body portion **26** about bend line **57**, and extends across the hollow interior of

body portion **26** at an acute angle to the longitudinal axis of the terminal. At its free end tab **56** extends through an opening **60** in body portion **26** which is diametrically opposite the opening **62** which results from striking tab **56** inwardly. It will be noted that tab **56** engages the edge **64** of opening **60** so that the extent to which it can be flexed outwardly of opening **60** is effectively limited by the edge **64**. Edge **64** is located so as to accurately control the extent to which the free end portion **66** of tab **56** projects radially outwardly beyond the outer periphery of cylindrical body portion **26**. As is clearly evident from FIG. 1, when terminal **14** is inserted in block **10** with lugs **40** engaging shoulder **38**, the end portion **66** of tab **56** is spaced slightly from the end **67** of slot **50**.

Tab **58** on terminal **16** is likewise struck inwardly from the cylindrical body portion **28** about bend line **69** and extends across the hollow interior of body portion **28** at an acute angle to the longitudinal axis of the terminal with its free end portion **68** projecting outwardly through an opening **70** in body portion **28**. Tab **58** bears against the edge **72** of opening **70** to limit the extent to which tab **58** can flex in a direction outwardly of body portion **28**. With terminal **16** fully inserted in block **12**, that is, with lug **48** engaging shoulder **46**, the free end portion **68** of tab **58** is spaced slightly from the end **65** of slot **52**. In actual manufacture, tabs **56, 58** are overbent slightly so that they are preloaded, that is, they are in pressure contact with the backing edges of the respective holes **60, 70** through which they project. This eliminates entirely any problem of maintaining close tolerances in the bending of these tabs.

The leading end of terminal **16** is preferably formed with a tapered nose **74** to facilitate its insertion in the open end **76** of terminal **14**. In addition, tapered nose **74** is fashioned with a radially extending lug **78** which is aligned with the parting line **32** on the cylindrical body portion **28**. Lug **78** is preferably bent up from one edge of the body portion and the adjacent edge is notched slightly as at **80**, so that the lug will be disposed on the center line of the terminal. The leading edges of terminal **14** are notched or tapered as at **82**, to facilitate entry of lug **78** between the contacting edges which form the parting line **30** on terminal **14**. Terminal **14** is also formed with an aperture **84** positioned to receive lug **78** when terminal **16** is fully inserted in terminal **14**. To facilitate withdrawal of terminal **16** from terminal **14**, the leading edges of aperture **84** are tapered as at **86**.

Each terminal is engaged within its respective terminal block by inserting the terminal through the block from the outer end thereof. In the case of terminal **16** and block **12**, for example, terminal **16** is inserted leading end foremost through the open end **87** of bore **44**. The portion of the block aligned centrally of tab slot **52** and adjacent shoulder **46** is fashioned with a radial slot **88** to accommodate lug **78**. As the end **68** of tab **58** engages shoulder **46** it is deflected inwardly in the manner of a leaf spring through opening **70** so that the tab can pass into the smaller bore portion **42**. When tab **58** is aligned with slot **52**, the tab snaps radially outwardly into slot **52** to the extent permitted by the edge **72** of the opening **70** in the terminal. The terminal is thus effectively locked in the terminal block. Terminal **14** is engaged within its terminal block **10** in substantially the same manner. It will be understood that normally each terminal block retains a plurality of laterally spaced terminals.

When it is desired to interconnect the terminals, terminal block **12** is manipulated relative to the terminal block **10** to align each of the nose portions **74** of terminals **16** with the open end **76** of a corresponding terminal **14** in block **10**. Insertion of the body portions **28** into the terminal block **10** is facilitated by a slight chamfer **90** at the open end of the bore **34** of terminal block **10**. As the leading ends of terminals **16** are advanced into terminals **14**, the lug **78** on each terminal **16** enters between the tapered edges **82** on the corresponding body portion **26** to facilitate the circumferential expansion of each terminal **14** and thus separate the contacting edges forming the parting line **30**.

When the juxtaposed faces **54** of the two terminal blocks come into abutting relation, each lug **78** snaps into a corresponding aperture **84** and thus causes each body portion **26** to contract into tight engagement with the associated body portion **28** of terminals **16**. To disconnect the terminals the operation is reversed, and the force required to pull them apart is lessened by the provision of lug **78** in conjunction with the tapered edges **86** of aperture **84**.

It will be appreciated that where each terminal block contains many terminals, a rather substantial force may be required to telescopically engage the terminals. However, in view of the fact that the tabs **56, 58** are rigidly backed adjacent their outer ends against edges **64, 72**, respectively, there is no tendency for these tabs to collapse, even though they are of rather substantial length. Their rigidity can be increased if desired by forming them with a slight crown in cross section, as illustrated. The fact that the tabs **56, 58** are of substantial length is, however, a definitely advantageous feature of my terminal construction. Being of substantial length, they deflect rather easily and have near perfect recovery as compared to a relatively short tab which would have to bend to a substantially greater extent in order to insert the terminal in the terminal block. Even though the tabs themselves are of substantial length, nevertheless they project radially outwardly from the terminal only a slight extent. For example, on a .093 inch terminal the tab is designed to project radially beyond the cylindrical body portion only .020 inch. This contributes to their rigidity.

Likewise, by forming the tabs **56, 58** so that they extend across the hollow interior of their respective terminal as shown, each of the terminals can be readily removed from the terminal blocks by inserting a removal tool, such as indicated at **92**, through the open end of the terminal to deflect the tab inwardly to a position where it will clear the end of the slot in which it is disposed. As pointed out previously, each tab has sufficient clearance with the inner end **67, 69** of the corresponding slot in the terminal block to enable the tab to flex radially inwardly through the opening **70** or **60**, as the case may be. In FIGS. 1–6 the inclination of tabs **56, 58** to the axis of the terminals is illustrated as about 45°. This inclination can be increased slightly or decreased considerably but it is important that in any event the portion of the tab traversing the hollow interior of the terminal be inclined to the axis of the terminal at an angle substantially less than 90° in order to obtain all of the above-described advantages of my invention.

In FIGS. 7 through 11 there is shown a modified form of the terminal construction which differs slightly from that previously described and which is particularly adapted for very small diametric terminals. The terminal blocks here illustrated are designated **100, 102**, block **100** being adapted to accommodate the female terminal **104** and block **102** being adapted to accommodate the male terminal **106**. As in the previous embodiment, both terminals are of generally cylindrical shape and are adapted to be formed from flat sheet metal in progressive dies. Each terminal is formed with tabs **108, 110** adapted to be crimped to the ends of the wires **112**. The cylindrical body portion **114** of terminal **104** is formed with an opening **116** and a pair of inclined lugs **118**. The cylindrical body portion **120** of terminal **106** is likewise formed with an opening **122** and a pair of inclined lugs **124**. The cylindrical body portion **120** of terminal **106** is dimensioned to have a slight interference fit within the cylindrical body portion **114** of terminal **104**.

Each terminal has an inwardly struck tab thereon which is flexible and resilient, the tab for the female terminal being designated **126** and the tab for the male terminal being designated **128**. These two tabs are formed generally

in the same manner and to the same configuration so that a detailed description of one will suffice. Referring to tab **126** for example, it will be observed that the tab is struck inwardly from the wall of cylindrical portion **114** as at bend line **130**. Since the portion **114** is of circular shape and cross section, bend line **130** will comprise generally a segment of a circle. The tab **126** comprises a first portion **132** which is bent inwardly at a relatively steep angle, for example, about 70° to the longitudinal axis of the terminal. It is then reversely bent at the straight bend line **134** so that the central intermediate portion **136** of tab **126** exends across the hollow interior of portion **114** at an angle of about 20° to the longitudinal axis of the terminal. Adjacent its free end tab **126** is formed with a third bend line **138** so that the extreme end portion **140** of tab **126** projects outwardly through opening **116** in a plane which is substantially perpendicular to the longitudinal axis of the terminal.

Terminal block **100** is formed with a cylindrical socket **141** comprising a first bore **142** which terminates at its inner end in tapered seat **144** which connects with a cylindrical bore **146** dimensioned to receive the body portion **114** of terminal **104** with a slip fit. The other end of bore **146** is defined by a radially outwardly extending shoulder **148** that defines an enlarged bore portion **150** extending to the forward face **152** of terminal block **100**. Seat **144** and shoulder **148** are spaced apart axially such that when the female terminal **104** is inserted into the terminal block, lugs **118** engage seat **144** and the projecting portion **140** of tab **126** engages shoulder **148**. When terminal **104** is inserted into block **100** through the open end of bore **142**, the tapered seat **144** engages the projecting portion **140** of tab **126** and cams the tab inwardly to clear bore **146**. When the terminal is fully inserted in the terminal block as shown in FIG. 7, tab **126** flexes outwardly so that portion **140** engages shoulder **148** to lock the terminal in place.

Terminal block **102** is likewise formed with a cylindrical socket **153** comprising a first bore **154** terminating in tapered seat **156** which connects with one end of a bore **160**. The other end of bore **160** is defined by a shoulder **158** which connects bore **160** with an enlarged bore **162** extending to the forward end face **163** of block **102**. The male terminal **106** is insertable in its terminal block **102** and retained therein by shoulders **156, 158** in the same manner as described above with respect to terminal **104**.

In the case of very small dimensioned terminals the construction shown in FIGS. 7 through 11 has advantages over the embodiments previously described. By forming the projecting portion **140** of tabs **126, 128**, so as to extend perpendicularly of the axes of the terminals, the possibility of the tabs collapsing due to an axially directed pressure is even more remote. This is particularly true when the male terminals in one block are inserted in the female terminals in the other block. On one axial side of tab **140** it is supported by the straight edge **164** of the opening through which it projects and and on the opposite axial side it is supported by the shoulder in the terminal block, that is shoulder **148** in the case of tab **126** and shoulder **158** in the case of tab **128**. Since the tab portion **140** projects outwardly beyond the outer surface of the cylindrical body portion of the terminal only a slight extent, it is not readily bendable as a result of axial pressure applied thereto by the shoulder of the terminal block. In addition, I have found that by striking the tab inwardly with a reverse bend such as shown at **130, 132, 134** the flexibility and the resiliency of the tab is improved over the construction shown in FIGS. 1 through 6. Since the bend line **130** is by necessity a curved line, the ability of the tab to flex about this bend line is rather limited. However, the tab itself in this embodiment is flat and bend line **134** is straight. The intermediate portion **136** of each tab is, therefore, freely flexible about the bend line **134** and the ability of the tab to return to the position illustrated in FIG. 7 after it has been deflected inwardly is not impaired. This is important not only because the tabs have to flex inwardly when the terminals are initially inserted in their respective terminal blocks but also because it enables the terminals to be withdrawn from and reinserted into the terminal blocks without impairing or destroying the holding power of tabs **126, 128**.

The provision of the perpendicular projecting end portions **140** of the tabs **126, 128** involves another advantage; namely, the ability to easily deflect the tabs inwardly for removal of the terminals from within their respective terminal blocks. Referring to FIGS. 10 and 11, it will be observed that these tabs can be deflected inwardly to a position clearing the bores **146, 160** by simply inserting through the open end of the respective terminal a straight wire-like element **166** as distinguished from a specially formed tool. For example, the element **166** can be conveniently formed from a partially straightened conventional paper clip **188**. As the wire element **166** is inserted into the open end of the terminal, it engages the intermediate portion **136** of the tab to deflect it or cam it inwardly. However, the extent of axial inward movement of wire **166** is limited by the engagement by the end of the wire with the perpendicularly directed tab portion **140**. Since the end of wire **166** abuts directly against tab portion **140** the possibility of riding over the free edge of tab **140** with the wire is eliminated and thus the tendency to deflect the tab inwardly too great an extent is avoided. Obviously if the tab were deflected too great an extent, it would lose its ability to recover its required position for enabling the projecting portion **140** to engage the adjacent shoulder on the terminal block for locking the terminal in the block. The inward deflection of tab portion **140** in this arrangement can be controlled to that required or desired by simply increasing or decreasing the diameter of wire **166**. This is clearly evident from FIGS. 10 and 11 since when the wire is fully inserted in the end of the terminal to a position where it abuts tab portion **140**, one side of the wire will be engaged with the inside of the cylindrical wall forming the body portion of the terminal and the diametrically opposite side of the wire will be contacting the intermediate portion **136** of the tab adjacent the bend line **138**. The lateral clearance space within the hollow interior of the terminal at each side of the tab is less than the diameter of the wire element. Thus the end of the wire element cannot slip past the tab.

Another important feature of the present invention lies in the fact that even though the terminal may be formed of a lightweight sheet metal, for example, sheet metal having a thickness of .0126 inch in the case of a terminal having a diameter of .093 inch, the terminal itself is relatively rigid and does not have any long, flimsy radial projections on its outer surface. This is important because terminals of this type when formed on progressive dies are advantageously interconnected by lugs **94** with carrier strips **96** to enable handling of the terminals as reels. For example, until the individual terminals are crimped onto the wire, they are connected to the carrier strips or runners **96** so that they can be reeled. The die which crimps the wire gripping tabs **18, 24** in FIGS. 1–6 and **108, 112** in FIGS. 7–11 is preferably fashioned so that it simultaneously shears the lugs **94** from the opposite ends of the terminals. Since these terminals are handled as reels for purposes of convenience, it is important that the terminals have no flimsy exterior projections which would readily entangle with similar projections or the like on the terminals on the next successive convolution of the reel. For example, lugs **40, 48, 118**, and **124** are short rigid projections which do not bend readily and the projecting portions of tabs **56, 58, 126** and **128** are likewise short and not subject to entanglement.

I claim:

1. An electrical terminal of the type adapted to be inserted within a socket of a terminal block and having an elongated body with a forward and rear end, said body comprising a hollow portion of generally circular cross section having an opening in one side thereof and a tab struck inwardly from the opposite side thereof, said tab traversing the interior of said hollow portion at an acute angle to the longitudinal axis of the hollow portion and projecting through said opening at its free end, said tab being connected with the hollow portion by a first bend extending around a portion of the circular periphery of said hollow portion, said tab having a second bend therein spaced lengthwise of the tab from said first bend, the portion of the tab provided with the second bend being generally flat and the second bend extending transversely across said tab and being located closely adjacent the first bend and remotely from the free end of said tab, said tab being adapted to engage shoulder means on the terminal block to limit movement of the terminal in the socket in the direction of said rear end, the projecting portion of the tab being axially offset substantially from the portion of the tab connected with said opposite side of said hollow portion, said opening having sufficient axial extent in a direction rearwardly of the projecting portion of the tab to permit flexing of the tab about said second bend radially inwardly through said opening in the manner of a leaf spring, said opening having two sides and having one end located closely adjacent the projecting portion of the tab on the forward side thereof to limit flexing of the tab in a direction toward the forward end of the terminal.

2. An electrical terminal as set forth in claim 1 wherein the portion of said tab between said two bends extends inwardly from the connection of the tab with said hollow portion at a relatively steep angle to the longitudinal axis of the hollow portion and then the tab extends towards its free end at a lesser angle to the longitudinal axis of the hollow portion.

3. An electrical terminal as set forth in claim 2 wherein said second bend comprises a sharply defined straight bend line.

4. An electrical terminal as set forth in claim 2 wherein said steep angle lies in the range from about 60° to 90° and said lesser angle lies in the range of about from 20° to 40°.

5. An electrical terminal as set forth in claim 1 wherein said tab is formed with a third bend between said second bend and the free end thereof, the portion of the tab between said third bend and said free end extending through said opening and being substantially perpendicular to the longitudinal axis of said hollow portion.

6. An electrical terminal as set forth in claim 5 wherein said third bend is disposed within said hollow portion and closely adjacent the inner periphery of said hollow portion at said opening.

7. An electrical terminal as set forth in claim 6 wherein the forward end of said elongate body is provided with an axially opening central aperture adapted to accomodate the insertion of a tool therein for enabling the free end of the tab to be retracted through said opening in one side of the hollow portion to thereby permit removal of the terminal from within the socket of a terminal block.

References Cited

UNITED STATES PATENTS

2,689,337	9/1954	Burtt et al.	339—217
2,779,007	1/1957	Cunningham	339—217 X
2,999,221	9/1961	Ellis et al.	339—217 X
3,058,091	10/1962	Henschen	339—217 X
3,059,213	10/1962	Lalonde	339—217 X
3,156,517	11/1964	Maximoff et al.	339—217 X
3,215,975	11/1965	Kinkaid	339—217 X

MARVIN A. CHAMPION, Primary Examiner

P. A. CLIFFORD, Assistant Examiner

U.S. Cl. X.R.

339—176, 213