March 25, 1969 F. E. WELD 3,435,413
APPARATUS AND METHOD FOR TRANSLATING A NONDESCRIPT SIGNAL INTO A DISTINCTIVE RECORDABLE SIGNAL
Filed June 7, 1965 Sheet 1 of 2

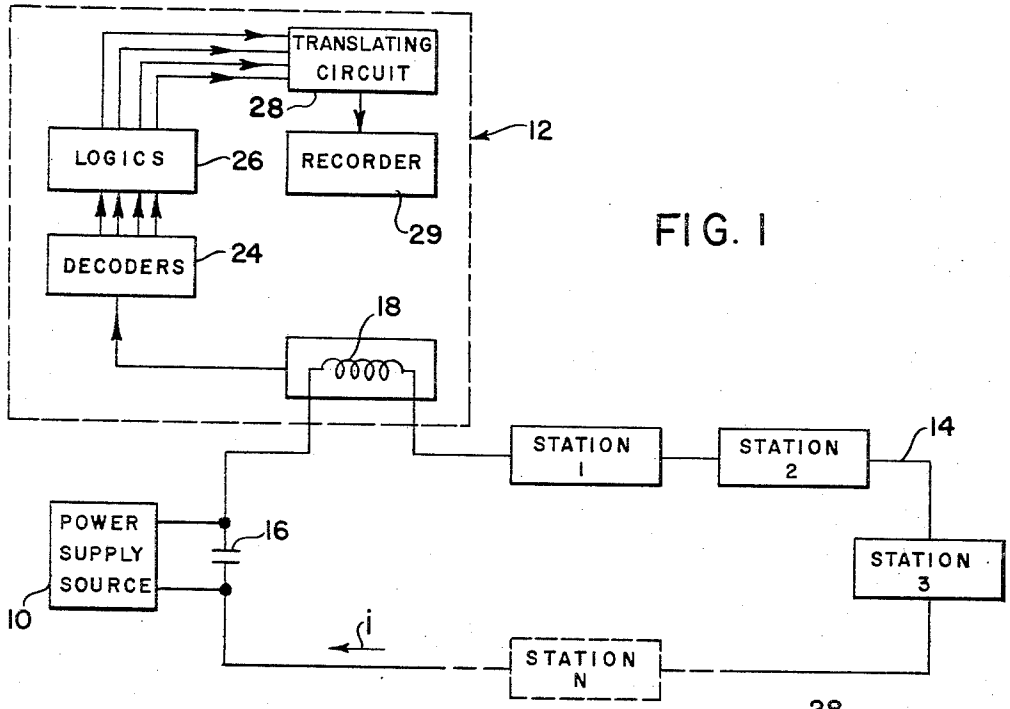

FIG. 1

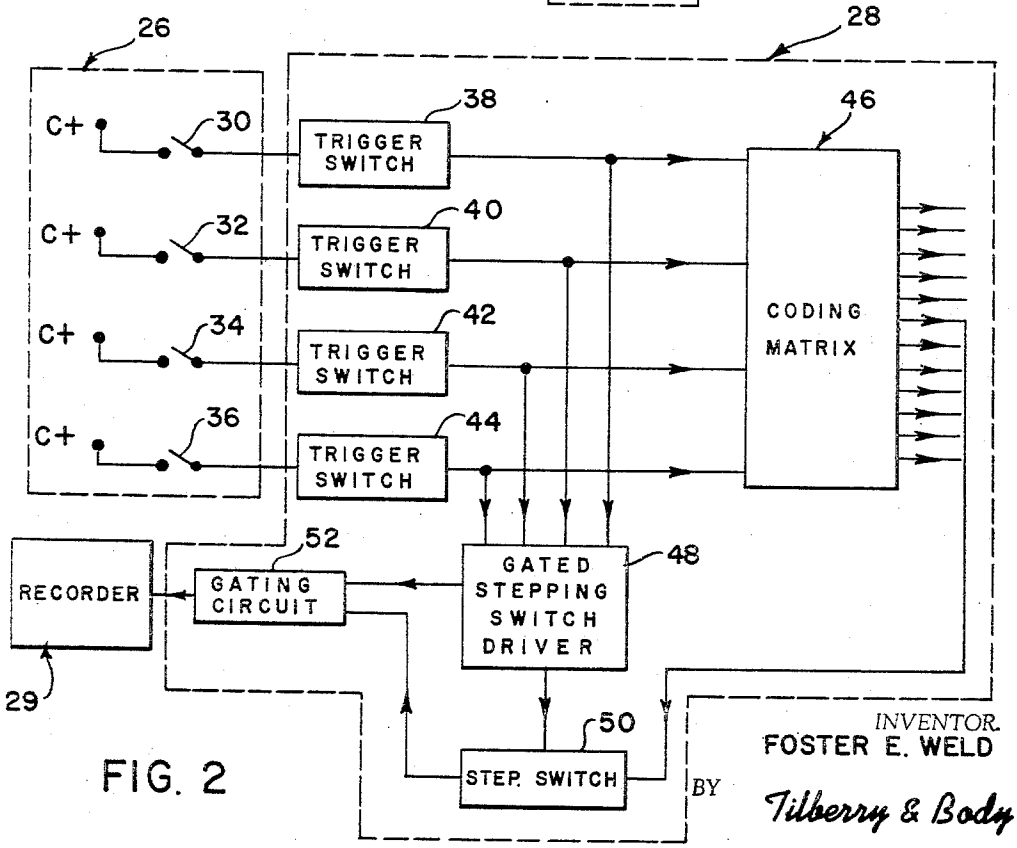

FIG. 2

INVENTOR.
FOSTER E. WELD
BY Tilberry & Body
ATTORNEYS

March 25, 1969 F. E. WELD 3,435,413

APPARATUS AND METHOD FOR TRANSLATING A NONDESCRIPT SIGNAL INTO A DISTINCTIVE RECORDABLE SIGNAL

Filed June 7, 1965 Sheet 2 of 2

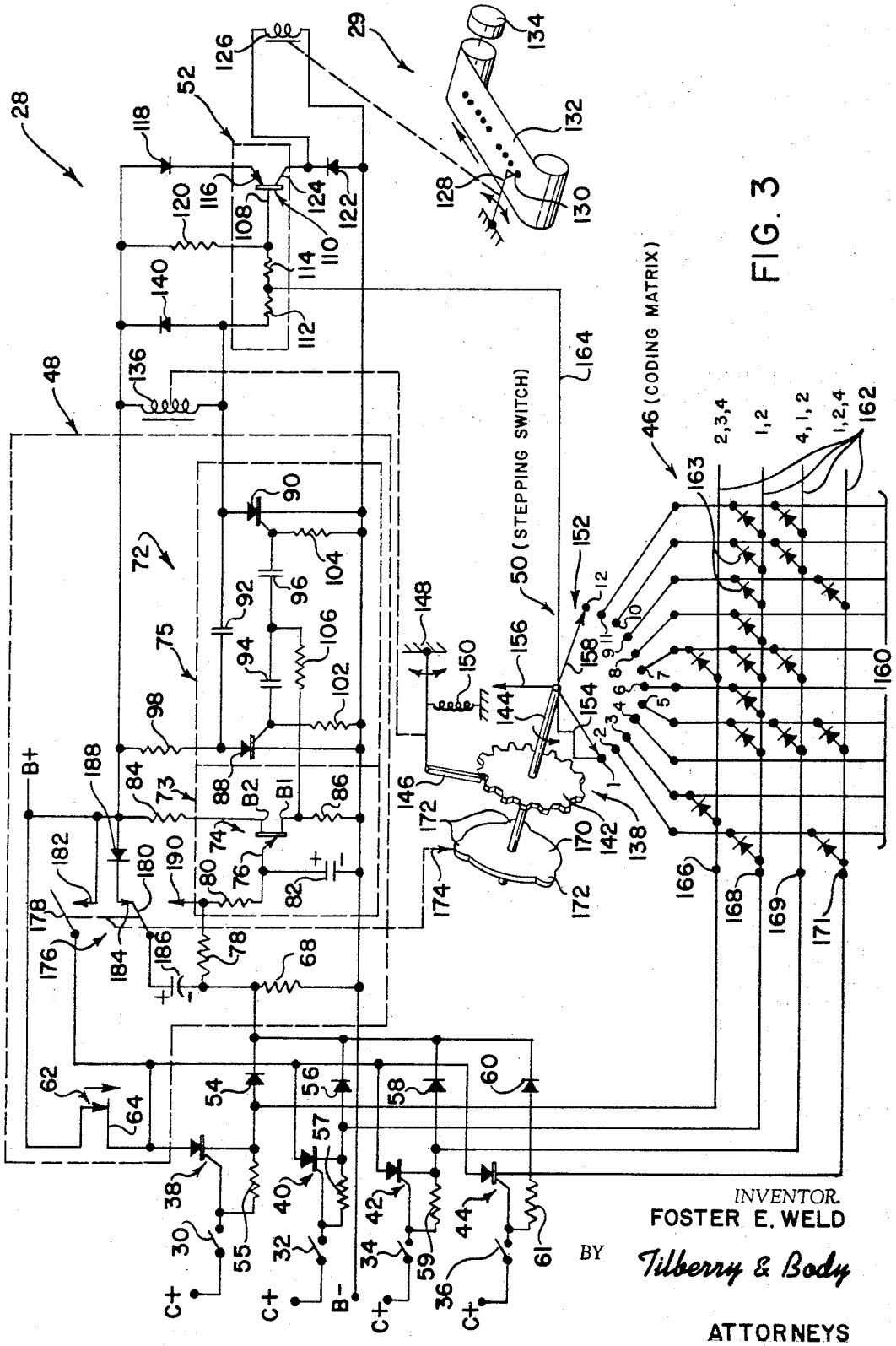

FIG. 3

INVENTOR.
FOSTER E. WELD

BY Tilberry & Body

ATTORNEYS

United States Patent Office 3,435,413
Patented Mar. 25, 1969

3,435,413

APPARATUS AND METHOD FOR TRANSLATING A NONDESCRIPT SIGNAL INTO A DISTINCTIVE RECORDABLE SIGNAL

Foster E. Weld, Newton Highlands, Mass., assignors to E. W. Bliss Company, Canton, Ohio, a corporation of Delaware

Filed June 7, 1965, Ser. No. 462,028
Int. Cl. G11b 5/78; G08b 25/00
U.S. Cl. 340—147 12 Claims

ABSTRACT OF THE DISCLOSURE

Apparatus and method are as disclosed herein for use in translating a nondescript signal representative that a predetermined condition has occurred at a local station into a descriptive pattern of coded recordable pulses. The apparatus includes means, such as a signal generator, for purposes of providing a steady state output signal. A pulse generator serves to provide a train of time spaced pulses. A coding matrix serves to receive the output signal and provide a characteristic pattern of signal pulses at a plurality of output circuits which are representative of a particular local station. A stepping mechanism responds to the generated pulses for purposes of sequentially stepping one step at a time for each generated pulse and from one of the output circuits to the next. A gating circuit responds to the signal pulses and the generated pulses for developing a recordable pulse only upon occurrence in time of a generated pulse in the absence of a signal pulse. This gating circuit is adapted to be connected to a recording mechanism for recording an indication for each recordable pulse.

This invention pertains to the art of recording and, more particularly, to apparatus and method for translating a nondescript signal into a distinctive recordable signal.

The invention is particularly applicable for use in conjunction with fire alarm and police call systems and will be described with reference thereto; although it will be appreciated that the invention has broader applications.

A typical fire alarm system takes the form of a series loop connecting various local fire alarm boxes or stations together in a current carrying series circuit with a central station. A fire alarm call may be sent from each local station to the central station by merely actuating a lever at the local station, which in turn actuates a device for interrupting the current flow in a distinctive manner resulting in a coded signal. The coded signal takes the form of a train of current pulses which are time spaced according to a code representative of the calling local station. The coded signal is transmitted through the series circuit to recording equipment at the central station for recording a mark for each received pulse, with the resultant pattern of recorded marks corresponding to the coded signal and, hence, representative of the calling station.

Recently, a combined telephone-telegraphy fire or police alarm system has been developed for use by municipalities and takes the form as disclosed in United States patent application, Ser. No. 403,316, filed Oct. 12, 1964, now Patent No. 3,384,714, entitled "Combined Telephone-Telegraphy System," assigned to the same assignee as the present invention. That system utilizes the time proven reliability of the typical series connected fire alarm stations. But, in addition to fire or alarm reporting, the system provides voice communication between the calling local station and the central station through the series circuit. The new system also deviates from the typical

fire alarm system in that when a person lifts a telephone handset at one of the local stations, a complex coded tone frequency alarm signal made up of two distinct frequencies will be transmitted through the series circuit to the central station. At the central station a plurality of frequency decoders serve to decode the complex coded frequency signals, and for each complex signal received two decoders, representative of two different frequencies, will each provide a steady state output potential. A plurality of AND circuits at the central station are each associated with a particular local fire alarm station, and each is connected to a different combination of two decoders. When two decoders connected to a particular AND circuit develop output potentials, then that AND circuit will also develop a steady state output potential representative of its associated local fire alarm station which transmitted the alarm signal. A light associated with each AND circuit will glow when that AND circuit develops an output potential to alert an operator at the central station as to which local fire alarm station transmitted an alarm signal. The operator may then communicate by voice communication with the person initiating the alarm signal for details of the fire, etc.

Many municipalities that desire to convert their typical fire alarm system to a combined telephoned-telegraphy system, as described above, also desire that means be provided for permanently recording which fire alarm station transmitted an alarm signal. In the interests of economy, many of these municipalities further desire that any existing recording equipment owned by the municipality for use with a typical fire alarm system be used with the combined telephone-telegraphy system. The steady state output potentials developed by each AND circuit of the new system are nondistinguishable from each other, rendering them nondescript and not easily utilized for actuating recorder equipment normally used with a typical fire alarm system. Accordingly, means are required for translating the nondescript output potential developed by each AND circuit into a descriptive recordable signal representative of the calling local fire alarm station.

The present invention is directed toward apparatus and method for satisfying the foregoing needs of fire alarm systems for translating nondescriptive signals into descriptive recordable signals, taking the preferred form of coded signal pulses which may be utilized for actuating recording equipment, including the type normally used with a typical fire alarm system.

In accordance with the present invention, the translating apparatus includes: a circuit responsive to the occurrence of a nondescript signal for developing a steady state output signal; a pulse generator responsive to the output signal for generating a train of spaced pulses; a coding matrix having an input circuit for receiving the output signal and a plurality of output circuits, and having circuits for providing a characteristic pattern of signal pulses at its output circuits representative of a particular local station; a stepping switch device responsive to the generated pulses for sequentially stepping one step at a time for each generated pulse from one of the coding matrix output circuits to the next; and, a gating circuit responsive to the characteristic signals and the generated pulses for developing a recording pulse only upon the occurrence of a generated pulse and the absence of a characteristic signal pulse.

In accordance with another aspect of the present invention, a method is provided for translating a nondescript signal representative that a predtermined condition occurred at one of a plurality of local stations into coded recordable pulses, comprising the steps of:

(1) Generating a train of time spaced pulses upon the occurrence of a nondescript signal;

(2) Applying a signal upon the occurrence of the nondescript signal to an input circuit of a coding matrix having a plurality of output circuits;

(3) Providing a characteristic pattern of coded signal pulses at the plurality of coding matrix output circuits representative of the local station;

(4) Cycling a stepping switch from one coding matrix output circuit to the next, one step at a time for each generated pulse; and,

(5) Recording an indication on a recording medium only upon the occurrence in time of a generated pulse and the absence of a signal pulse.

By practicing the method described above, a coded pattern of indications will be recorded during each cycle of operation of the stepping switch representative of the local station at which the predetermined condition occurred.

A primary object of the invention is to provide apparatus and method for translating a nondescript signal into a distinctive recordable signal.

Another object of the present invention is to translate a nondescriptive signal representative of a particular one of a plurality of local stations in a fire alarm system into a distinctive recordable signal in the form of coded pulses which may be used by a municipality's existing recorder equipment for recording a coded pattern of indications representative of the particular local station.

These and other objects and advantages of the invention will be come apparent from the following description of the preferred embodiment of the invention as read in connection with the accompanying drawings in which:

FIGURE 1 is a system block diagram illustrating a plurality of series connected calling stations and a central station;

FIGURE 2 is a block diagram of one embodiment of the present invention; and,

FIGURE 3 is a schematic diagram illustrating in greater detail the preferred embodiment of the invention.

Referring now to the drawings and more particularly to FIGURE 1, there is illustrated in block diagram form one application of the preferred embodiment of the invention as applied to a fire alarm system, which is preferably constructed in accordance with United States application, Ser. No. 403,316, identified previously, generally including a plurality of local fire alarm stations **1**, **2**, **3** through N, connected together in series across a central station power supply source **10** through central station equipment **12**. The power supply source **10** and central station equipment **12** may be located, for example, at the fire department headquarters and the various local stations **1** through N may be located at desired locations within the fire alarm system. The several stations **1** through N are connected together in series by means of a single metallic circuit **14** through which direct current flows, in accordance with the arrow *i* illustrated in FIGURE 1, having a constant value on the order of 100 milliamperes supply by the power supply source **10**. Power to operate each local station **1** through N is obtained from the direct current flow in circuit **14**. A pair of encoders are located in each local station and serve, upon lifting of a handset at the station, to develop a pair of frequency signals which are combined and transmitted through circuit **14** as a complex coded tone frequency signal representative of the calling station to the central station **12**. A capacitor **16** is connected across the power supply source **10** to prevent the complex coded tone frequency signals from being coupled to the power supply source. The central station equipment **12** includes coupling circuitry **18**, which serves to couple received tone frequency signals from the calling local station to decoder circuitry **24** including a plurality of decoders for decoding the complex frequency signal. For each complex frequency signal received, two decoders, representative of the two combined frequency signals, each developing a steady state output potential. The steady state output potentials of decoder circuitry **24** are applied to logic circuitry **26**, which includes a plurality of logic AND circuits, each representative of one of the local stations **1** through N. Each AND circuit of logic circuitry **26** is connected to a different combination of two decoders of decoder circuitry **24** and serves when both its decoders develop output potentials to in turn develop a nondescript output potential representative that its associated local station transmitted an alarm signal.

In accordance with the present invention, a translating circuit **28** is provided for translating the nondescript output potentials developed by the AND logic circuits of logic circuitry **26** into descriptive recordable signals for application to a recorder **29**. The translating circuit **28** is illustrated in greater detail in block diagram form in FIGURE 2, and generally includes: four trigger switches **38**, **40**, **42**, and **44**; a coding matrix **46**; a gated stepping switch driver **48**; and, a gating circuit **52**. Each trigger switch has an output circuit connected to one of a plurality of input circuits of both the coding matrix **46** and the gated stepping switch driver **48**. The coding matrix has a plurality of output circuits connected to the stepping switch **50**. The grated stepping switch driver **48** has two output circuits; one connected to stepping switch **50** and the other connected to an input circuit of gating circuit **52**. Stepping switch **50** also has an output circuit connected to an input circuit of gating circuit **52**, which in turn has an output circuit connected to recorder **29**.

The AND circuits of logic circuitry **36** are illustrated in simplified form in FIGURE 2 by switches **30**, **32**, **34**, and **36**, which serve when closed to respectively connect a C+ voltage supply source to trigger switches **38**, **40**, **42**, and **44** within translating circuit **28**. Switches **30** through **36** may also represent individual local stations of any system in which it is desired to record an indication that a particular station has placed a calling signal, or that a particular condition exists at or is noted by a local station. The calling signal in this instance is merely the closure of a switch, i.e., switches **30** through **36**.

Referring now to FIGURE 3, the trigger switches **38** through **44**, coding matrix **46**, gated stepping switch driver **48**, stepping switch **50** and gating circuit **52**, as well as the recorder **29** are shown in greater detail in schematic diagram form. Trigger switches **38** through **44** preferably take the form as silicon controlled rectifiers, as shown in FIGURE 2, and will be referred to as such hereinafter. Switches **30**, **32**, **34** and **36** serve to respectively connect a C+ voltage supply source with the gates of silicon controlled rectifiers **38**, **40**, **42** and **44**. The anodes of rectifiers **38**, **40**, **42** and **44** are connected together in common with a B+ voltage source through a normally closed restoring switch **62**, which may be manually opened by merely applying force to a spring type contact arm **64** in the direction of the arrow indicated in FIGURE 3. The cathodes of rectifiers **38**, **40**, **42** and **44** are connected together in common with a B— voltage supply source through diodes **54**, **56**, **58** and **60**, respectively. Resistors **55**, **57**, **59** and **61** are connected between the gate and cathode of rectifiers **38**, **40**, **42** and **44**, respectively, and each resistor serves in combination with a load resistor **68** within the gated stepping switch driver **48** as a voltage divider to prevent excessive voltage between the gate and cathode of its associated rectifier.

The gated stepping switch driver **48** includes a pulse generator **72** taking the form of a relaxation oscillator **73** and a bi-stable multivibrator **75**, connected across load resistor **68**. Relaxation oscillator **73** takes the form of a unijunction transistor **74** having a first base B1, a second base B2 and an emitter **76** connected with one end of resistor **68** through resistors **78** and **80**. A timing capacitor **82** is connected between the emitter **76** and a B— voltage supply source. Base B2 is connected to the B+ voltage supply source through a current limiting resistor **84** and

base B1 is connected to the B— voltage supply source through an output resistor **86**.

Bi-stable multivibrator **75** of pulse generator **72** is connected across the output resistor **86** of relaxation oscillator **73** and includes a pair of silicon controlled rectifiers **88** and **90** connected together in push-pull fashion, with their anodes being directly connected together through a capacitor **92**. The gate of rectifier **88** is connected to the gate of rectifier **90** through a pair of series connected capacitors **94** and **96**. The anode of rectifier **88** is connected with the B+ voltage supply source through a current limiting resistor **98**. The cathodes of the rectifiers **88** and **90** are directly connected to the B— voltage supply source. The gates of rectifiers **88** and **90** are connected to the B— voltage supply source through current limiting resistors **102** and **104**, respectively. The output of the relaxation oscillator **73** is coupled to the input of the bi-stable multivibrator **75** by means of a current limiting resistor **106** connected between the junction of the series connected capacitors **94** and **96** and the junction of base B1 of unijunction transistor **74** and output resistor **86**.

The anode of rectifier **90** is connected to the base **108** of a germanium power transistor **110** within gating circuit **52** through a pair of series connected resistors **112**, **114**, also located within gating circuit **52**. The emitter **116** of transistor **110** is connected to the B+ voltage supply source through a diode **118**, poled as shown in FIGURE 3. A resistor **120** is connected between the B+ voltage supply source and base **108** of transistor **110** and a diode **122** is connected between the B— voltage supply source and the collector **124** of transistor **110**. Diode **118** and resistor **120** together serve to prevent false turn-on of transistor **110**. Diode **122** serves as a surge suppressor to limit the induced voltage in marking magnet coil **126**. The power transistor **110** serves as a relay for energizing a recorder marking magnet coil **126** of recorder **29** connected across diode **122**. The recorder marking magnet coil **126** serves, when energized, to actuate a suitable marking arm **128** to print a mark **130** or make a perforation, if desired, in a suitable recording medium **132** driven by a suitable motor **134** at constant speed in the direction indicated by the arrow in FIGURE 3.

Stepping switch **50** includes a stepping switch magnet coil **136** connected between the anode of rectifier **90** and the B— voltage supply source, and when energized by anode current of rectifier **90** serves to actuate a ratchet motor **138**. A diode **140**, poled as illustrated in FIGURE 3, is connected across magnet coil **136** of stepping switch **50** and serves as a surge suppressor to limit the induced voltage across coil **136**. Ratchet motor **138** includes a ratchet wheel **142** mounted on a rotatable shaft **144** driven by a spring biased ratchet pawl **146** which is pivotally mounted to a support **148** and spring biased by a spring **150**. Each time magnet coil **136** is energized, pawl **146** is withdrawn from engagement with ratchet wheel **142** and each time the coil is de-energized the pawl **146** drives the ratchet wheel **142** one step by spring power from spring **150** so that shaft **144** rotates one step at a time about its axis in the direction of the arrow illustrated in FIGURE 3. A contact wiper **152** having three equally spaced contact wiper arms **154**, **156** and **158** is mounted on shaft **144**. The contact wiper arms **154**, **156** and **158** are electrically connected to the junction of resistors **112** and **114** of gating circuit **52** through a common output circuit **164**.

Coding matrix **46** may be of any suitable type capable of performing the operation to be described hereinafter, but preferably comprises a first plurality of ten conductors **160**, vertically arranged in FIGURE 3, overlying and in perpendicular relationship to conductors **162**, horizontally arranged in FIGURE 3. Conductors **160** are each connected with one of the output contacts or terminals **2** through **11** of coding matrix **46**. One of the wiper arms **154**, **156** and **158** is, at the beginning of a cycle of operation of the stepping switch **50**, in electrical contact with terminal **1** of the stepping switch. The horizontally arranged conductors **162** at terminals **166**, **168** and **169** respectively serve as input circuits for the cathodes of silicon controlled rectifiers **38**, **40**, **42** and **44**. Coding matrix **46** is prearranged by means of a plurality of diodes **163** to provide a characteristic pattern of signals at its output terminals **2**, **3**, **4**, **5**, **6**, **7**, **8**, **9**, **10** and **11** in accordance with the positioning of the various diodes. Thus, for example, it will be noted, with respect to the uppermost horizontal conductor **162**, that a diode connects terminal **166** with output terminal **3** and another diode connects terminal **166** with output terminal **7**. In this manner, as contact wiper **152** is sequentially stepped from terminals **1** through **11** current flows from input terminal **166** to the common output circuit **164** only when the contact wiper engages output terminal **3** or output terminal **7**. This is representative of a code **2**, **3**, **4**. Similarly, it will be appreciated with reference to the next lower horizontal conductor **162**, a plurality of diodes connect terminal **168** with each of the output terminals **2**, **5**, **6**, **7**, **8**, **9**, **10** and **11**, but not with output terminals **3** and **4**. This is representative of code **1**, **2**. Similarly, it will be noted that the next lower horizontal row of diodes provides a characteristic pattern of signals at output terminals **2** through **11**, representative of code **4**, **1**, **2**. Thus, it will be appreciated that the coding matrix **46** provides a different characteristic pattern of signals at its output terminals for each of the calling stations, represented in FIGURE 3 by switches **30**, **32**, **34** and **36**.

The shaft **144** of the stepping switch **50** is provided with a cam **170** having three cam lobes **172** thereon extending radially outward with respect to shaft **144** and spaced equi-distant with respect to each other. A cam follower **174** rides on cam **170** as shaft **144** rotates and serves to operate a double pole, double throw switch **176**. Switch **176** is provided with a pair of movable contacts **178** and **180**, illustrated in FIGURE 3, in their normal position with cam follower **174** located on cam lobe **172**. Switch **176** also has a stationary contact **182** for engagement with movable contact **178** and is electrically connected to the junction of resistor **84** and the B+ voltage supply source. Switch **176** also has a stationary contact **184** in electrical contact with movable contact **180** connecting a capacitor **186** in series with the B— voltage supply source to the B+ voltage supply source through resistor **68** and diode **188**, poled as illustrated in FIGURE 3, for charging the capacitor **186**. The switch **176** has another stationary contact **190** connected to the junction of resistors **78** and **80**, and serves when electrically connected with movable contact **180** to provide a discharge circuit for capacitor **186** through resistor **78**.

Operation

The operation of the translating circuitry **28**, illustrated in FIGURES 1, 2 and 3, commences with receipt at the central station **12** of a coded complex frequency alarm signal made up of two different distinct frequencies transmitted by one of the local calling stations **1** to N. The coded complex frequency signal is applied through coupling circuitry **18** to decoder circuitry **24**, where two decoders, representative of the two combined frequencies, each develops a steady state output potential. The two steady state potentials are applied to logic circuitry **26** wherein one AND logic circuit responds to the two potentials and in turn develops a steady state potential representative of one of the calling stations, for example, station **1**. For purposes of simplifying the explanation of the invention, the AND logic circuit is illustrated in FIGURE 3 by switch **30**, which when closed provides a positive nondescript steady state potential from the C+ voltage supply source, representative of station **1**. Thus, with switch **30** closed, a positive potential will be applied to the gate of silicon controlled rectifier (trigger switch) **38** from the C+ voltage supply source, thereby forward

biasing the rectifier which then conducts current through its anode to cathode circuit from the B+ voltage source, through normally closed restoring switch **62** to the input terminal **166** of coding matrix **46**. Capacitor **186** will have been previously charged in accordance with the polarities, illustrated in FIGURE 3, by current flow from the B+ voltage supply source to the capacitor through diode **188** and resistor **68** to the B— voltage supply source. It is to be understood that the B+ voltage supply source represents the positive side of a direct voltage supply source and the B— voltage supply source represents the negative side of the same voltage supply source. With rectifier **38** forward biased and conducting, current will also flow from the B+ voltage supply source through the anode to cathode circuit of rectifier **38**, diode **54**, and through the load resistor **68** to the B— voltage supply source. Accordingly, capacitor **82**, which is connected in parallel with resistor **68** through resistors **78** and **80**, will charge according to the polarities indicated in FIGURE 3. When the voltage across capacitor **82** rises to the peak point voltage, approximately one-half of the value of the B+ voltage supply source, of transistor **74**, its emitter **76** will become forward biased and capacitor **82** will discharge through the emitter **76** to base B1 of transistor **74** and output resistor **86**. A positive voltage pulse will appear across output resistor **86**. Thereafter, the capacitor **82** will again charge and discharge through transistor **74** and resistor **86** at a rate according to a RC time constant determined by the values of capacitor **82** and resistor **80**.

Each positive voltage pulse developed across resistor **86** will be applied to the gates of rectifiers **88** and **90** through coupling capacitors **94** and **96**, respectively. The first voltage pulse will forward bias both rectifiers **88** and **90**, but rectifier **88** will not remain conductive since resistor **98** limits the anode current of rectifier **88** to a value less than the required holding current. Rectifier **90**, however, will remain conductive because series connected resistors **112**, **114** and **120** in parallel with the stepping switch magnet coil **136** provides anode current for rectifier **90** of a value greater than that of the required holding current.

When rectifier **90** is conducting, capacitor **92** will charge through resistor **98** and the anode to cathode circuit of rectifier **90**. When the next pulse is received from output resistor **86**, rectifier **88** will again become momentarily forward biased and conductive to thereby discharge capacitor **92**, producing a negative voltage pulse at the anode of rectifier **90** causing rectifier **90** to become reversed biased. Thus, rectifier **90** will be conducting and then non-conducting, respectively, under control of alternating pulses developed by relaxation oscillator **73**, whereby pulse generator **72** will develop a train of equally time spaced voltage pulses as long as rectifier **38** is conducting.

Each time rectifier **90** is conducting, current will flow from the B+ voltage supply source through stepping switch coil **136** to the B— voltage supply source through the anode to cathode circuit of rectifier **90**. This will energize coil **136** causing pawl **146** to be pivoted in a clockwise direction, as viewed in FIGURE 3, against the resistance of spring **150**. Upon de-energization of coil **136**, when rectifier **90** becomes reversed biased, pawl **146** will be resiliently biased by spring **150** to step the ratchet wheel **142** one step by spring power. Thus, each time pulse generator **72** energizes coil **136** there will result, upon the subsequent de-energization of coil **136**, a one step movement of contact wiper **152**. In this manner, contact wiper **152** will sequentially step one step at a time from contact terminal **1** to contact terminal **12**.

When wiper arm **154** of contact wiper **152** is stepped from contact terminal **1**, as shown in FIGURE 3, to contact terminal **2**, cam follower **174** will ride off cam lobe **172** whereby the double pole, double throw switch **176** will be displaced from the position as illustrated in FIGURE 3 so that movable contact **178** engages stationary contact **182** and movable contact **180** engages stationary contact **190**. The engagement of movable contact **178** with stationary contact **182** short circuits restore switch **62** preventing turn-off of rectifier **38** for the duration of a complete cycle of wiper arm **154** from terminal **2** through terminal **11**. The engagement of movable contact **180** with stationary contact **190** serves to discharge capacitor **186** through resistor **78**.

Transistor **110** of gating circuit **52** serves as a relay for recorder marking magnet coil **126**, and is forward biased by anode current of rectifier **90**. Each time rectifier **90** is conducting, a sufficiently negative potential will exist on base **108** of transistor **110** with respect to that existing on emitter **116** thereby forward biasing transistor **110**. Thus, current will flow from the B+ voltage supply source, through diode **118**, the emitter **116** to collector **124** of transistor **110**, and thence through marking magnet winding **126** to the B— voltage supply source, thereby energizing winding **126**. Energization of marking magnet winding **126** causes marking magnet arm **128** to record a mark **130** on the recording medium **132**.

The recorder **29** will record a predetermined code, such as **2, 3, 4**, as illustrated by the marking **130** in FIGURE 3, by the use of the diode coding matrix **46**. A diode **163** is placed in circuit connection between terminal **166** and matrix output terminal **3** and another diode **163** is placed between terminal **166** and matrix output terminal **7**. When contact wiper arm **154** engages contact terminal **3**, or terminal **7**, the B+ voltage supply source is connected to the base **108** of transistor **110** through the diodes **163**, the common output circuit **164**, and resistor **114**. Each such connection applies a positive voltage pulse of sufficient magnitude to the base **108** of transistor **110** to reverse bias the transistor, preventing energization of recorder marking magnet winding **126**. Thus, each such connection serves to cancel a time coincident recording pulse received from pulse generator **72**, leaving a space between adjacent marks **130**. As wiper arm **154** is sequentially stepped one step at a time from terminal **1** to terminal **12**, a characteristic pattern of marks **130**, according to code **2, 3, 4**, will be recorded on recording medium **132**.

At the completion of the recording cycle, i.e., the completion of sequential stepping of wiper arm **154** from terminal **1** through terminal **12**, cam follower **174** will ride up a cam lobe **172**, whereby the double pole, double throw switch **176** will return to the position as illustrated in FIGURE 3. Contact wiper arm **156** will then be positioned in contact with terminal **1** and contact wiper arm **154** will then be positioned in contact with terminal **12**. Even if switch **30** had been momentarily closed, the current would continue to flow from the B+ voltage supply source through the rectifier **38** to maintain energization of the pulse generator **72**. When the double pole, double throw switch **176** is returned to the position as shown in FIGURE 3, current will flow to recharge capacitor **186** in accordance with the polarity indicated in FIGURE 3. The charging of capacitor **186** will act as a momentary short circuit across rectifier **38**, causing de-energization of rectifier **38** and consequent de-energization of pulse generator **72**. The diode **188** in the charging circuit of capacitor **186** serves to prevent false triggering of the pulse generator **72** by discharging capacitor **186** when rectifier **38** becomes deenergized.

When capacitor **186** becomes fully charged, the translating circuit **28** will be in condition to begin a new cycle of operation.

I claim:

1. Apparatus for translating a nondescript signal representative that a predetermined condition occurred at a local station into a descriptive pattern of coded recordable pulses and including means responsive to the occurrence of said nondescript signal for providing a steady state output signal, means responsive to said output signal

for generating a train of time spaced pulses, a coding matrix having an input circuit for receiving said output signal and a plurality of output circuits, said coding matrix including means for providing a characteristic pattern of signal pulses at its output circuits representative of a particular local station, stepping means responsive to said generated pulses to sequentially step one step for each generated pulse from one of said output circuits to the next, and gating means responsive to said signal pulses and said generated pulses for developing a recordable pulse only upon occurrence in time of a generated pulse and the absence of a signal pulse, said gating means adapted to be connected to a recording means for recording an indication for each said recordable pulse.

2. Apparatus as set forth in claim 1 wherein said means for providing an output signal includes a silicon controlled rectifier having a gate, an anode and a cathode and adapted to connect via its anode-cathode circuit a voltage supply source with the input circuit of said pulse generating means for energization thereof upon conduction of said rectifier.

3. Apparatus as set forth in claim 2 including normally closed restoring switch means in said anode-cathode circuit for disconnecting said voltage supply source from said anode-cathode circuit to cause turnoff of said rectifier resulting in de-energization of said pulse generating means.

4. Apparatus as set forth in claim 3 including normally open switching means in circuit parallel with said restoring switching means, said normally open switching means being closed for short circuiting and thus disabling said restoring switching means during the period of sequential stepping of said stepping means.

5. Apparatus as set forth in claim 4 including cam means which cycles said stepping means, and cam follower means operatively connected to said normally open switching means for closing said switching means during the period that said stepping means sequentially steps across said output circuits of said coding matrix.

6. Apparatus as set forth in claim 2 including means for de-energizing said pulse generator means after a cycle of operation of said stepping means across said output circuits of said coding matrix.

7. Apparatus as set forth in claim 6 wherein said de-energizing means includes a capacitor, a capacitor discharge circuit, two position switching means having a normal first position in which said capacitor is connected across the anode-cathode circuit of said rectifier, and a second position in which said capacitor is connected across said discharge circuit for discharging said capacitor, means for operating said two position switching means in response to said generated pulses whereby upon the first step of said stepping means said switching means is in its second condition and upon completion of said stepping means across the output circuits of said coding means the switching means is returned to its normal first position, whereby as said capacitor charges it effectively short circuits the anode-cathode circuit of said rectifier causing turnoff thereof and de-energization of said pulse generating means.

8. Apparatus is set forth in claim 7 including cam means which cycles with said stepping means, and cam follower means operatively connected with said two position switching means for positioning said switching means in said second position during the period that said stepping means sequentially steps across said output circuits of said coding matrix.

9. A method of translating a nondescript signal representative that a predetermined condition occurred at a local station into coded recordable pulses and recording said pulses, the method comprising the steps of: generating a train of spaced pulses upon the occurrence of said nondescript signal, applying a signal upon the occurrence of said nondescript signal to an input circuit of a coding matrix having a plurality of output circuits, providing a characteristic pattern of signals representative of a particular local station at said output circuits, cycling a stepping switch sequentially from one said output circuit to the next, one step at a time, for each generated pulse, recording an indication on a recording medium only upon the occurrence of a generated pulse and the absence of a characteristic signal, whereby for each cycle of operation of said stepping switch a characteristic indication pattern is recorded on said recording medium representative of the particular local station.

10. A method of translating a nondescript signal representative that a predetermined condition occurred at a local station into coded recordable pulses and recording said pulses, the method comprising the steps of: developing a steady state output signal upon the occurrence of said nondescript signal, applying said output signal to a coding matrix, developing a characteristic pattern of signal pulses representative of said local station at a plurality of output terminals of said coding matrix, generating a train of spaced pulses upon the occurrence of said nondescript signal, cyclically stepping a switch arm one step at a time for each generated pulse sequentially from one output terminal to the next, and actuating a recorder to record on a recording medium an indication only upon the occurrence of a generated pulse and the absence of a characteristic signal, whereby for each cycle of sequential stepping of said switch arm a characteristic pattern of indications is recorded representative of a particular local station.

11. In central station equipment means adapted for use in receiving coded station identifying frequency signals from a plurality of local stations and including a like plurality of means each associated with a local station for developing a steady state nondescript output signal when its associated local station transmits a coded frequency signal, the improvement comprising: means for generating a train of spaced pulses, a coding matrix having a separate input circuit associated with each of said calling stations and a plurality of output circuits, stepping means responsive to said generated pulses for sequentially stepping one step at a time for each generated pulse from one of said output circuits to the next, said coding matrix having means for providing a different characteristic pattern of signal pulses at its output circuits for each said local station, means coupled to said output circuits via said stepping means and responsive to said signal pulses and said generated pulses for developing a recording pulse only upon the occurrence of a generated pulse and the absence of a signal pulse, and recording means responsive to said recording pulses for recording an indication for each recording pulse, whereby for each cycle of operation of said stepping means a characteristic pattern of indications is recorded representative of which local station transmitted a coded frequency signal.

12. In a telegraphy system having a plurality of local stations and a central station connected togther in a series circuit and adapted to be connected across a power supply source for maintaining current flow in said series circuit, each said local station including means for transmitting a coded frequency signal to said central station via said series circuit, a plurality of means at said central station each associated with one of said stations for developing a steady state nondescript output signal when its assocated station transmits a coded frequency signal, the improvement comprising: means responsive to said output signal for generating a train of spaced pulses, coding means responsive to said output signal for providing at a plurality of output circuits a different characteristic pattern of coded signal pulses for each said local station, stepping means responsive to said generated pulses for sequentially stepping one step at a time for each generated pulse from one of said output circuits to the next, gating circuit means coupled with said stepping means and responsive to said signal pulses and said generated pulses for developing a recording pulse only upon the occurence

of a generated pulse and the absence of a signal pulse, and recording means responsive to said recording pulses for recording an indication for each said recording pulse, whereby for each cycle of operation of said stepping means a characteristic pattern of indications is recorded representative of which station transmitted a coded frequency signal.

References Cited

UNITED STATES PATENTS

3,206,545	9/1965	Kennedy et al.	179—4
3,327,060	6/1967	Hogan	179—5

DONALD J. YUSKO, *Primary Examiner.*