Aug. 24, 1948. P. F. HOOTS 2,447,908

FOLDING CLOTHES RACK FOR AUTOMOBILES

Filed Dec. 10, 1945 2 Sheets-Sheet 1

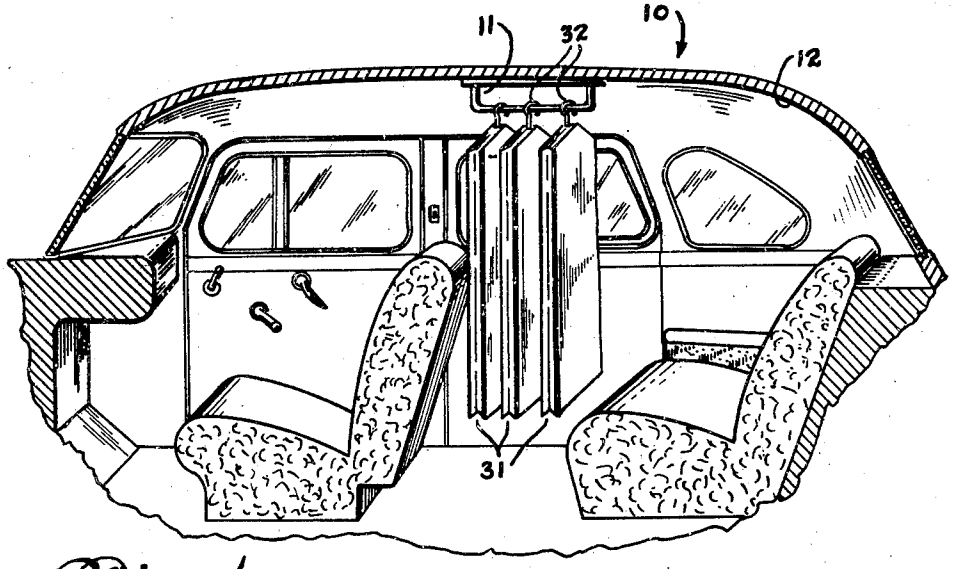

Fig. 1

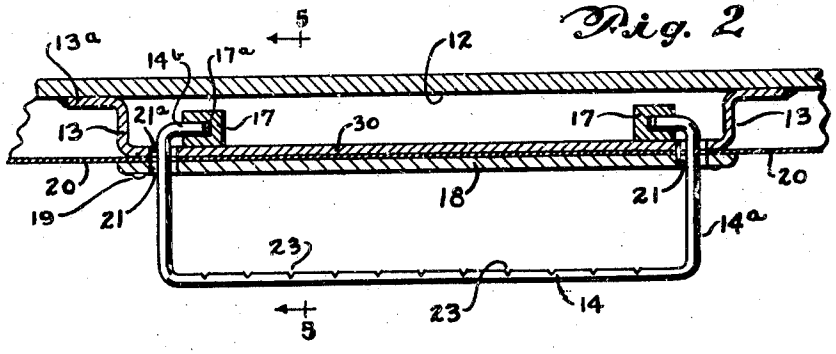

Fig. 2

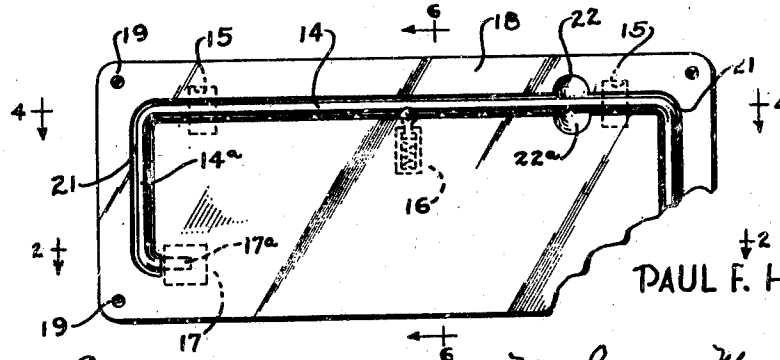

Fig. 3

Inventor
PAUL F. HOOTS

By Mawhinney & Mawhinney
Attorneys

Aug. 24, 1948. P. F. HOOTS 2,447,908

FOLDING CLOTHES RACK FOR AUTOMOBILES

Filed Dec. 10, 1945 2 Sheets-Sheet 2

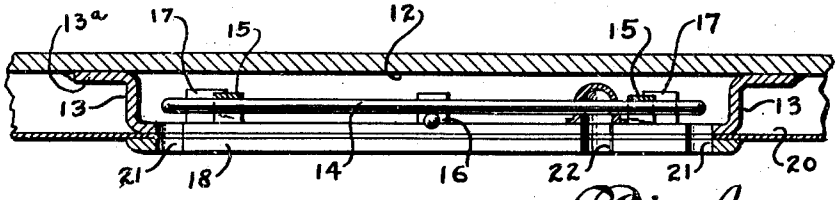

Fig. 4

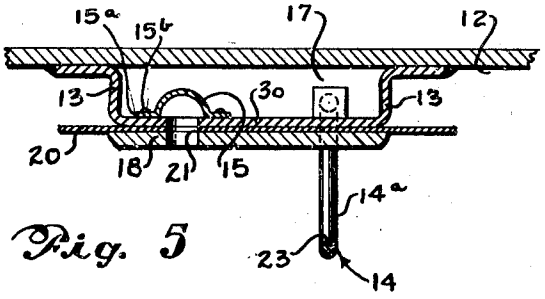

Fig. 5

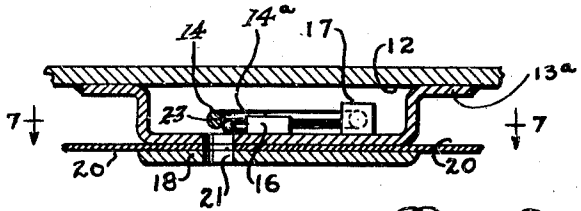

Fig. 6

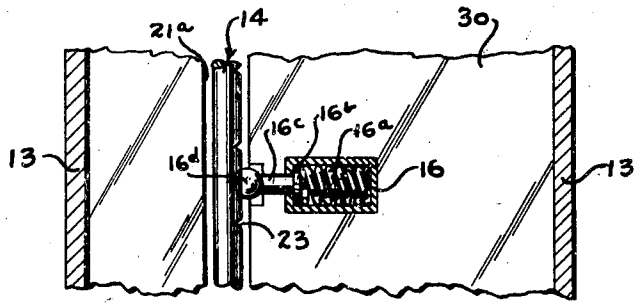

Fig. 7

Inventor

PAUL F. HOOTS

By Mawhinney & Mawhinney

Attorneys

Patented Aug. 24, 1948 2,447,908

UNITED STATES PATENT OFFICE

2,447,908

FOLDING CLOTHES RACK FOR AUTOMOBILES

Paul F. Hoots, New Orleans, La.

Application December 10, 1945, Serial No. 633,943

8 Claims. (Cl. 224—42.1)

1

The present invention relates to improvements in folding clothes racks for automobiles and more particularly has for an object to produce a folding rack adapted to be placed in the roof of an automobile or other vehicle adapted to receive the conventional garment hangers by which a number of articles of clothing may be suspended in the vehicle in a position similar to that in which pressed garments are hung in closets at home.

Another object of the invention is to provide an improved automobile clothing rack to satisfy the needs of the motoring public for an adequate and substantial support on which wearing apparel may be hung when touring.

A further object of the invention resides in promoting the convenience and comfort of the motorist and tourist by including as a permanent accessory in automobiles a clothes rack which will be concealed by the upholstery and normally in a folded state whereby its presence will not be observed or obtruded upon the attention of the passengers in the vehicle but is susceptible of immediate projection into an operative position where it may receive a number of garment hangers all held in spaced relation against the vibration and jarring of the vehicle and suspended in such a position as not to interfere with the vision of the driver through the rear window.

With the foregoing and other objects in view, the invention will be more fully described hereinafter, and will be more particularly pointed out in the claims appended hereto.

In the drawings, wherein like symbols refer to like or corresponding parts throughout the several views,

Figure 1 is a fragmentary perspective view of a vehicle equipped with an improved folding clothes rack constructed in accordance with the present invention;

Figure 2 is a vertical fragmentary section taken on an enlarged scale on the line 2—2 of Figure 3 and showing the garment hanger support in the "down" operative position;

Figure 3 is a bottom plan view of the folding rack apart from the vehicle with the garment hanger support in the raised or collapsed position;

Figure 4 is a vertical section similar to Figure 3 and showing the garment hanger support raised and locked in place;

Figure 5 is a transverse vertical section taken on the line 5—5 of Figure 2;

Figure 6 is a similar section taken on the line 6—6 of Figure 3, and

2

Figure 7 is a horizontal section taken on the line 7—7 of Figure 6.

Referring more particularly to the drawings, which show only one embodiment of which the invention is susceptible, 10 designates the automobile to which will be attached the device 11, to the underside of the roof 12.

The rack device generally designated 11 comprises a shallow box or casing having a bottom wall 30, shallow side walls 13 and outwardly extending flanges 13a which may be welded or otherwise secured to the underside of the roof 12 which forms the top of the enclosure, within which the means for supporting the hanger rod 14 is contained. This enclosure also contains the hanger rod stops 15 having the feet or flanges 15a secured as by the fastenings 15b to the bottom wall 30 and being arched upwardly as shown in Figure 5.

A spring detent generally indicated as 16 is also mounted within the casting on the upper side of the bottom wall 30.

The hanger rod or support 14 is substantially U-shaped having the right angularly extending arms 14a, the terminal ends of which are inturned to constitute trunnions 14b rotatably received in the bearing sockets 17a of bearing blocks 17 affixed upon the upper side of the bottom wall 30 within the confines of the casing.

The casing is sufficiently shallow to fit within the normal space between the car roof 12 and the upholstery line 20. A plate 18 is provided to cover that area of the upholstery which encompasses the bottom plate 30 and this plate 18 may be secured through the upholstery 20 to the bottom wall 30 by screws or other appropriate fastenings 19. The bottom face of the plate 18 may be given any ornamental appearance.

Registering U-shaped slots 21 and 21a are provided respectively in the plate 18 and bottom wall 30 of a size and shape to receive the clothes hanger support rod 14 and its arms 14a, whereby this U-shaped support may move into and out of the casing, as compare Figure 5 and 6.

As shown more particularly in Figure 7, the detent casing 16 confines a coil spring 16a for yieldably urging a plunger 16b against a cylinder head out through which projects a shank 16c carried by the plunger 16b and terminated at its outer end in a ball head 16d normally projected in an overhanging relation to the slots 21 and 21a, for which see Figure 6. The rod 14 is preferably of a rounded cross section and is so related to the spherical curvature of the ball 16d when in its

projected position that one semicircular side of the rod 14 will encounter the head 16d in the raising movement of the rod 14, causing the detent to be retracted for the upward passage of the rod 14; after which the spring 16a will again project the ball 16d to the position shown in Figure 6, thus holding the rod 14 elevated within the casing.

As shown to advantage in Figure 2, the bar is provided with a number of spaced notches 23 to receive and to localize in spaced relation a plurality of hooks 32 (Fig. 1) of garment hangers upon which garments may be hung in the usual protective bags 31.

As shown more particularly in Figure 3, complementary finger and thumb cut-outs 22 and 22a are provided through the plate 18 and bottom wall 30 on opposite sides of the slots 21 and 21a through which the hanger bar 14 passes.

In the use of the device, the hanger bar 14 and its arms 14a are normally in the raised position entirely within the casing where the same are unrevealed. The support 14, 14a is retained in this position by the detent 16. When its use is required the forefinger and thumb may be introduced upwardly through the cut-outs 22 and 22a in order to seize the bar 14 and forcibly pull it down against the resilient action of the spring 16a which will give way to this exercise of force to permit the passage downwardly of the bar 14. The spring 16a will thereafter immediately again project the ball 16d across the slots 21, 21a.

After release from the detent, the support 14, 14a will seek by gravity the substantially vertical position shown in Figures 1, 2 and 5 where the elongated bar 14 is enabled to receive the hooks 32 of the garment hangers. From an inspection of Figure 1, it will be clear that the relative position of the rack in the vehicle will preferably be such that the garments 31 may hang down freely between the front and back seats without any interference from the upholstery. It will also be clear from Figure 1 that the relative arrangement and construction of the improved folding rack is such that the bar 14, an elongated bar, extends lengthwise in the direction of length of the vehicle but preferably parallel and to one side of the longitudinal median line of the vehicle so that the garments in the bags 31 do not interpose a barrier to the vision of the driver of the vehicle through the rear window by way of the mirror.

Also all of the parts of the device will preferably be of metal with the support 14, 14a of resilient metal whereby the trunnions 14b may be spread outwardly to assemble them into the mutually outturned sockets 17a of the bearing blocks 17. The trunnions may be assembled at the bearing block 17 through the open top of the casing before the casing is assembled to the roof of the vehicle and the stop loops 15 may be subsequently assembled to the casing bottom wall 30 above the bar 14.

When the rack is not to be used the bar 14 is swung upwardly about the trunnions 14b and required to pass through the slots 21 and 21a until the stop loops 15 are encountered—at which time the bar 14 will have just passed the detent ball head 16d. Thus the detent at one side and the limit stops 15 at the other will confine the bar 14 in place. Due to the rounded surface configuration of the bar 14, the rounded surface configuration of the stop loops 15 and the spherical surface of the ball 16d a close fitting of the bar 14 between the stops and detent is possible

to avoid the annoyance of any rattling incident to the movement of the vehicle.

Also it will be noted that the axes of the trunnions 14b lie in a longitudinal line of the vehicle and thus braking and accelerating movements of the vehicle will not tend to rotate the trunnions in the sockets which will avoid rattling and wear. For illustration purposes in Figure 2 we have shown the socket 17a unduly deep with reference to the lengths of trunnions 14b but in practice the inner ends of the trunnions 14b will very closely approach the inner ends of the socket 17a to reduce as far as possible the axial play which might give rise to annoying noises on sudden longitudinal movements of the vehicle.

While the loops 15 act as stops they also give strength in bridging the slot 21 thereby eliminating the possibility of plate 18 bending down from weight of garments in the section of plate 18 in the area surrounded by slots 21 and 21a.

It is obvious that various changes and modifications may be made in the details of construction and design of the above specifically described embodiment of this invention without departing from the spirit thereof, such changes and modifications being restricted only by the scope of the following claims.

What I claim is:

1. A folding clothes rack comprising a casing having a bottom wall, side walls and attaching means, said bottom wall having a slot completely therethrough, said slot composed of a longitudinal portion and arm portions at substantially right angles to the longitudinal portion, one end of one arm portion connecting with one end of the longitudinal portion and one end of the other arm portion connecting with the other end of the longitudinal portion, bearings in the casing adjacent the other ends of the arm portions, a garment hanger support bar, and arms each connected at one end with an end of said support bar and having their other ends pivoted in said bearings in position to swing into and out of the casing through the slot arm portions, said arms being of substantially the same length as the slot arm portions to align said bar for swinging movement into and out of the longitudinal slot portion.

2. A folding clothes rack as claimed in claim 1 characterized by the fact that a detent means is mounted within said casing comprising a spring-projected latch biased to a position partially overlapping the longitudinal portion of the slot whereby to be encountered and retracted by said hanger support bar on the movement of the bar into the casing.

3. A folding clothes rack as claimed in claim 2 wherein stop means is mounted in the casing astride the longitudinal portion of the slot in the path of movement of the bar to restrict the movement of said bar into the casing.

4. A folding clothes rack as claimed in claim 2 in which finger cut-outs are provided in the casing at opposite sides of the longitudinal slot portion to receive the finger of the operator for grasping and pulling the bar out of the casing.

5. A folding clothes rack as claimed in claim 1 characterized by the fact that the pivotal connection between said arms and bearing blocks comprises inturned trunnions on the arms rotatably mounted in sockets in the bearings, said bar and arms being of resilient material to enable the trunnions to be sprung into said sockets.

6. For use with an automobile having a roof and an upholstery covering spaced below the roof,

a folding clothes rack comprising a casing having a bottom wall, side walls, and means on the side walls for attachment of the casing to the automobile roof with the bottom wall in a substantially horizontal plane, said side walls being of substantially the depth of the space between the automobile roof and upholstery covering to enable the covering to extend beneath said bottom wall, said bottom wall having a slot completely therethrough composed of a longitudinal portion and arm portions at substantially right angles to the longitudinal portion, one end of one arm portion connecting with one end of the longitudinal portion and one end of the other arm portion connecting with the other end of the longitudinal portion, bearings in the casing adjacent the other ends of the arm portions, a garment hanger support bar, arms each connected at one end with an end of said support bar and having their other ends pivoted in said bearings in position to swing into and out of the casing through the slot arm portions, said arms being of substantially the same length as the slot arm portions to align said bar for swinging movement into and out of the longitudinal slot portion, and yieldable detent means in the casing in line with the longitudinal slot portion to encounter and latch the support bar in an upper position within the casing.

7. In combination, an automobile having a roof and an upholstery covering inside the roof and spaced downwardly therefrom, a folding clothes rack comprising a casing having a bottom wall, side wall and attaching means secured to the roof of the automobile with the bottom wall lying in a substantially horizontal plane within and covered by said upholstery covering, said bottom wall and upholstery covering having a slot completely therethrough composed of a longitudinal portion and arm portions at substantially right angles to the longitudinal portion, one end of one arm portion connecting with one end of the longitudinal portion and one end of the other arm portion connecting with the other end of the longitudinal portion, bearings in the casing adjacent the other ends of the arm portions, a garment hanger support bar, arms each connected at one end with an end of said support bar and having their other ends pivoted in said bearings in position to swing into and out of the casing through the slot arm portions, said arms being of substantially the same length as the slot arm portions to align said bar for swinging movement into and out of the longitudinal slot portion, and yieldable detent means in the casing in line with the longitudinal slot portion to encounter and latch the support bar in an upper position within the casing.

8. In combination with an automobile, a folding clothes rack comprising a casing having a bottom wall, side walls and attaching means attached to the roof of an automobile over the space between the front and back seats to the opposite side of the center line away from the driver's seat, said bottom wall having a slot completely therethrough composed of a longitudinal portion which is parallel with the longitudinal center line of the automobile and arm portions at substantially right angles to the longitudinal portion, one end of one arm portion connecting with one end of the longitudinal portion and one end of the other arm portion connecting with the other end of the longitudinal portion, bearings in the casing adjacent the other ends of the arm portions, a garment hanger support bar having its long axis arranged longitudinally of the vehicle and having spaced notches to separately receive and retain against jarring the hooks of a plurality of garment hangers, and arms each connected at one end with an end of said support bar and having their other ends pivoted in said bearings in position to swing into and out of the casing through the slot arm portions, said arms being of substantially the same length as the slot arm portions to align said bar for swinging movement into and out of the longitudinal slot portion, and detent means in the casing positioned to be engaged by said bar to hold the bar elevated in the casing.

PAUL F. HOOTS.

REFERENCES CITED

The following references are of record in the file of this patent:

UNITED STATES PATENTS

Number	Name	Date
512,519	Rey	Jan. 9, 1894
681,379	Tidd	Aug. 27, 1901