March 10, 1959 J. J. TETYAK 2,876,717

METHOD OF INTER-SEALING AND LAYING PIPE JOINTS

Filed Oct. 14, 1955

2 Sheets-Sheet 1

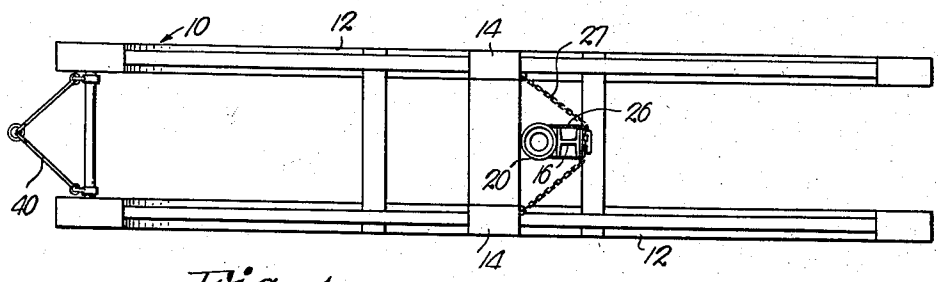


Fig. 1.

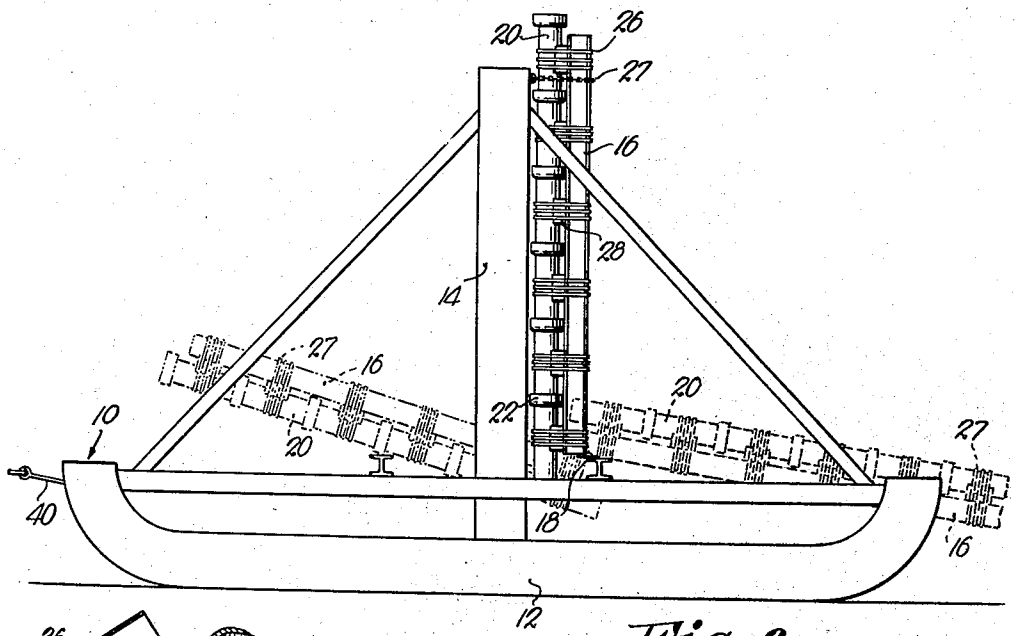


Fig. 2.

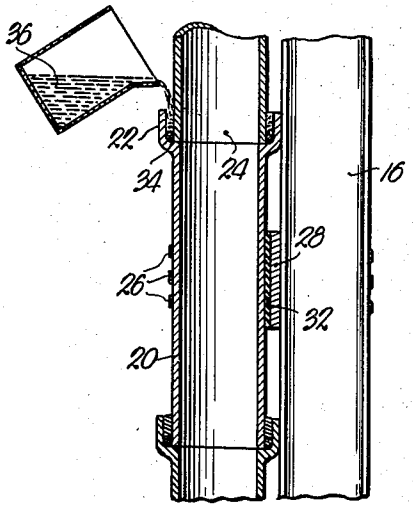


Fig. 3.

INVENTOR.
John J. Tetyak
BY
ATTORNEY.

March 10, 1959 J. J. TETYAK 2,876,717

METHOD OF INTER-SEALING AND LAYING PIPE JOINTS

Filed Oct. 14, 1955

2 Sheets-Sheet 2

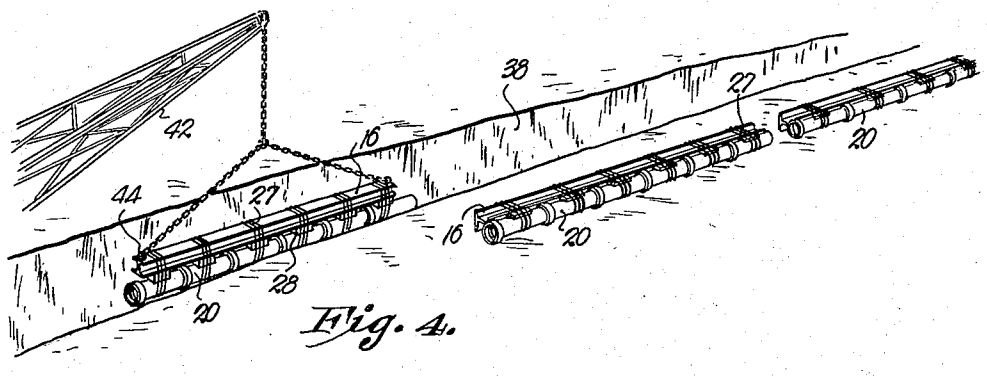


Fig. 4.

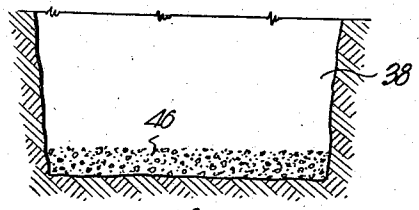


Fig. 5.

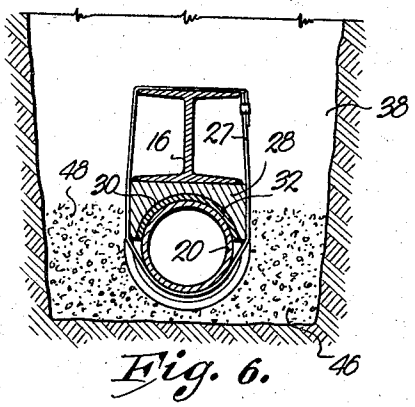


Fig. 6.

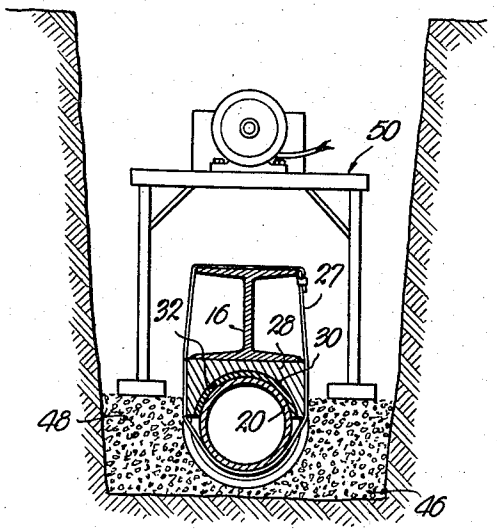


Fig. 7.

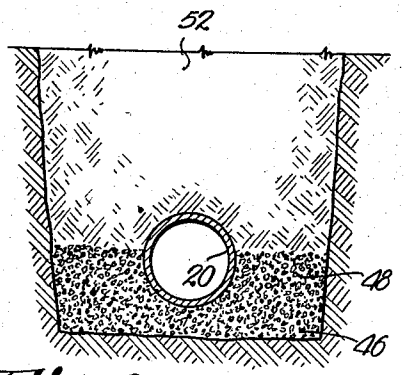


Fig. 8.

INVENTOR.
John J. Tetyak
BY
ATTORNEY.

United States Patent Office 2,876,717
Patented Mar. 10, 1959



2,876,717

# METHOD OF INTER-SEALING AND LAYING PIPE JOINTS

John J. Tetyak, Overland Park, Kans.

Application October 14, 1955, Serial No. 540,545

1 Claim. (Cl. 111—5)

This invention relates to the art of building pipelines and particularly to the laying of pipe sections characterized by the provision of bell-and-spigot joints interconnecting the sections as, for example, in conventional sewer pipe, the primary object being to provide a method of construction that improves upon common procedures by virtue of its labor-saving features, speed of advancement, and advantageous end results.

It is the most important object of the present invention to provide a method of constructing pipeline which eliminates the laborious and imperfect procedure conventionally employed within the ditch or other excavation for sealing the joints as the pipe sections are laid horizontally in successive order upon the bed of the ditch.

Another important object of the instant invention is to provide a method of the aforementioned character that permits adequate seating of the interconnected pipe sections within the excavation without danger of breaking the joints previously sealed between the sections.

A further object of this invention is to provide a method of laying pipe that facilitates the sealing operation by virtue of the fact that the bell or hub ends of the sections are initially disposed in an upwardly facing position whereby the sealing composition may be readily and quickly poured into the bell ends around the spigot ends of next adjacent sections.

A still further object of the present invention is to utilize in the method a rigid support to which the sections are initially attached in end-to-end relationship whereby the sections may be held in proper relative positions during the sealing operation and whereby the interconnected sections may subsequently be laid in the excavation without danger of breaking the joints.

It is still another object of the present invention to provide in the method above described a seating step that embodies the packing of loose aggregate alongside and beneath the interconnected sections within the excavation through use of a suitable vibrator, and while the sections are attached to the support or "strong-back" so that the joints will not likely be broken during subsequent covering of the pipeline and ground movement occasioned by temperature and moisture changes.

In the drawings:

Figure 1 is a plan view of a vehicle such as a sled employed in the carrying out of the method of inter-sealing and laying pipe joints forming the subject matter of the instant invention illustrating a series of pipe sections carried thereby in an upright position.

Fig. 2 is a side elevational view of the structure shown in Fig. 1 and illustrating by dotted lines and dash lines, the various positions of the pipe sections and the support to which the same are mounted.

Fig. 3 is an enlarged, fragmentary, cross-sectional view illustrating the sealing step forming a part of the method.

Fig. 4 is a perspective view illustrating the step of lowering the interconnected sections into an excavation.

Fig. 5 is a cross-sectional view through such excavation showing the initial aggregate bed upon which the sections are laid.



Fig. 6 is a cross-sectional view through the excavation and the pipe sections, as well as the support therefor, showing the aggregate that is added while the sections are attached to the support.

Fig. 7 is a cross-sectional view through the excavation illustrating the seating step forming a part of the method; and

Fig. 8 is a cross-sectional view showing the pipe sections completely embedded and ready for use.

In carrying out the method about to be described, it is contemplated that there be provided a suitable mobile vehicle such as a sled illustrated in Figs. 1 and 2 of the drawings and broadly designated by the numeral **10**. To this end there is provided a pair of runners **12** having suitably braced spaced uprights **14** intermediate the ends thereof.

In the initial phases of the method an elongated support or "strong-back" **16**, which is advantageously in the nature of an I-beam, is swingably mounted on the sled **10** through the medium of hinge **18** having a removable pin. It is seen by dotted lines in Fig. 2 the support **16** is initially swung to a substantial horizontal position for receiving a plurality of pipe sections **20** in end-to-end relationship on the uppermost face of the support **16**. Sections **20** are of conventional character in that the same are each provided with enlarged hub or bell ends **22** and spigot ends **24** that are received by the adjacent bells **22** as best seen in Fig. 3 of the drawings.

Accordingly, when the sections **20** are laid upon the horizontally disposed support **16**, the spigot ends **24** are inserted into adjacent bell ends **22**, and each section **20** is secured rigidly to the support **16** through use of suitable clamps as, for example, one or more straps **26**. To the end that the sections **20** are properly aligned and held against relative movement, it is to be preferred that support **16** be provided with a shoe **28** having a semi-cylindrical concavity **30** for receiving the sections **20**, as best seen in Figs. 6 and 7, and preferably provided with a suitable resilient liner **32** engaging the corresponding sections **20**.

When the straps **26** are wrapped around the support **16** and the sections **20**, the support **16** is swung on the hinge **18** to a substantially vertical position as seen in Figs. 1–3, thereby placing the bell ends **22** in an upwardly facing position convenient for carrying out the next step of the method, i. e. that of sealing the joints at the ends **22** and **24** of the sections **20**. Support **16** and sections **20** may be held in the vertical position through use of a chain or the like **27** on the uprights **14**. Such sealing step may be quite conventional and to this end, a suitable oakum, commonly employed for calking soil pipe and made of jute, jute waste and carded jute packing, together with a large percentage of tar, is inserted into the bell ends **22** around spigot ends **24**. Thereupon a suitable sealing compound **36** is poured into the bell ends **22**, as shown in Fig. 3 of the drawings.

After the sealing compound **36** has hardened, the support **16** is swung to the position shown by dash lines in Fig. 2, the hinge pin removed, and laid upon the ground alongside excavation **38**, whereupon, through use of a tongue **40**, the sled **10** may be moved to a new position and a subsequent series of pipe sections **20** interconnected in the manner just above described.

Through use of a suitable derrick or the like having a boom **42**, the interconnected sections **20** are lowered into the excavation **38**, support **16** being provided with suitable eyes or hooks **44** for attaching the same to the boom **42**. The excavation **38** is initially provided with a relatively shallow bed **46** of lightweight aggregate, as seen in Fig. 5, and it is upon this bed **46** that the sections **20**

are laid with the support 16 in overlying relationship thereto. Thereupon, additional aggregate 48 is poured into excavation 38 alongside the interconnected sections 20, as seen in Fig. 6 of the drawings, following which, through use of a suitable vibrator 50 adapted to straddle the support 16 and the interconnected sections 20 as seen in Fig. 7, the aggregate 48 is packed tightly against the sections 20 and beneath the latter by virtue of packing of the bed 46 so as to firmly seat the sections 20 in place.

The next step in the method consists of removal of the support 16 and the shoes 28 attached thereto after cutting loose all of the straps 26.

The operation is completed by filling the excavation 38 with dirt 52 in the usual manner as seen in Fig. 8.

It is now seen that except for the single operation of interconnecting the series of sections that are laid in end-to-end relationship in the manner shown in Fig. 4, the method may be carried out in its entirety without the necessity of workmen operating within the excavation 38. Many advantages arise from following the method, including speedy operation, as well as the provision of properly sealed joints between all of the sections that are initially mounted on the support 16.

In this connection, it is manifest that the oakum 34, as well as the sealing compound 36, may be more easily and more properly placed around the spigot ends 24 within the hubs 22 when the latter are in an upright position than has heretofore been the practice within the bottom of excavation 38. Furthermore, since the joints are all made prior to lowering of the interconnected sections into the ditch 38, and such interconnected sections are held in position by the straps 26, the seating step illustrated in Fig. 7, may be carried out more effectively without danger of breaking the joints or causing misalignment of the sections 20.



Having thus described the invention what is claimed as new and desired to be secured by Letters Patent is:

A method of constructing a pipeline consisting of a series of pipe sections having bell-and-spigot joints interconnecting the same, said method including the steps of swingably mounting an elongated support on a vehicle; attaching the sections to the upper face of the support with the spigot ends of the sections inserted into the bell ends of adjacent sections; swinging the support to a vertical position with said bell ends facing upwardly; placing a calking around the spigot ends within the bell ends; swinging the support to an inverted horizontal position with said sections depending therefrom; removing the support from the vehicle; lowering the support into an excavation; laying the sections on an aggregate bed in the excavation; packing additional aggregate along opposite sides of the sections; and removing the support from the sections and the excavation.


**References Cited in the file of this patent**

UNITED STATES PATENTS

| | | |
|---|---|---|
| 1,792,855 | McRae | Feb. 17, 1931 |
| 1,839,322 | Lawrence | Jan. 5, 1932 |

OTHER REFERENCES

American City, vol. 67, No. 2, February 1952, page 160.

American City, vol. 67, No. 2, April 1952, page 211.

American City, vol. 67, No. 2, September 1952, page 66.

Water and Sewage Works, vol. 98, No. 4, April 1951, pages 192–194.