United States Patent [19]

deVersterre et al.

[11] **3,818,284**

[45] **June 18, 1974**

[54] **VALVE CONTROL WITH PULSE WIDTH MODULATION**

[75] Inventors: **William I. deVersterre,** Warren; **Donald A. Worden,** Pompton Plains, both of N.J.

[73] Assignee: **Marotta Scientific Controls, Inc.,** Boonton, N.J.

[22] Filed: **Dec. 7, 1972**

[21] Appl. No.: **312,830**

[52] **U.S. Cl.** **317/124,** 250/233

[51] **Int. Cl.** **H01h 47/24**

[58] **Field of Search** 317/124; 250/231, 233, 250/234; 84/1.18; 330/59; 324/97

[56] **References Cited**

UNITED STATES PATENTS

2,176,720	10/1939	Rayner et al.	250/231 R
3,026,476	3/1962	Cannon, Jr.	250/233 X
3,032,691	5/1962	Cabellis	317/124
3,290,593	12/1966	Crowdes	317/124 X
3,415,998	12/1968	Crockett et al.	250/233
3,521,072	7/1970	Wipsen et al.	250/231 R
3,725,668	4/1973	Podgitt	250/231 R

Primary Examiner—J. D. Miller
Assistant Examiner—Harry E. Moose, Jr.
Attorney, Agent, or Firm—Sandoe, Hopgood & Calimafde

[57] **ABSTRACT**

This control, intended primarily for valve actuation, provides signals with pulse width modulation. The frequency of the pulse is high enough to produce dither in the controlled valve or other mechanical element; this being an effective way of making the operation of a mechanical element more delicate by reducing or eliminating static friction. The pulses are obtained by a mechanical shield that intercepts a supply of radiant energy and the width of the pulse is controlled by moving a non-circular shield further into or out of the path of the radiant energy. Rotating plates are used as the shield; and the path of radiant energy is from a source on one side of the plate to a receiver on the other side of the plate; the source and receiver being carried by the same bifurcated lever.

29 Claims, 18 Drawing Figures

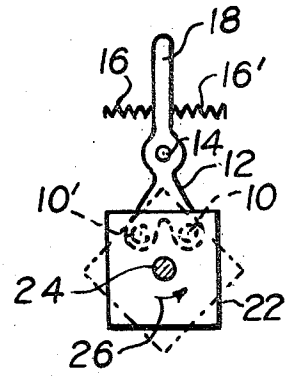

FIG. 1.

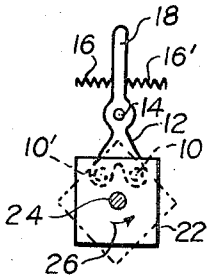

FIG. 2.

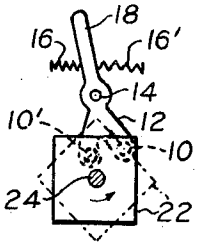

FIG. 3.

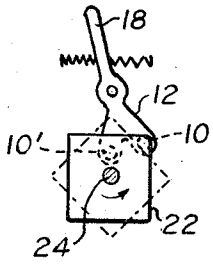

FIG. 4.

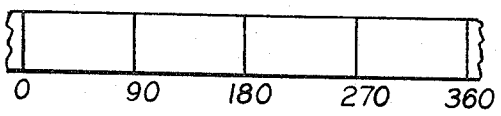

FIG. 5.

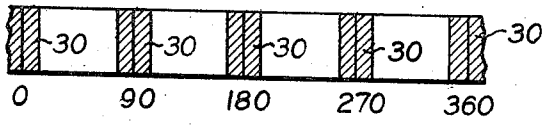

FIG. 6.

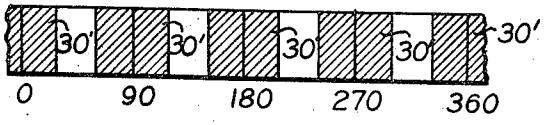

FIG. 7.

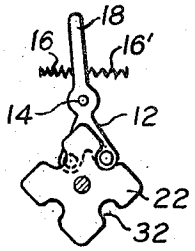

FIG. 10.

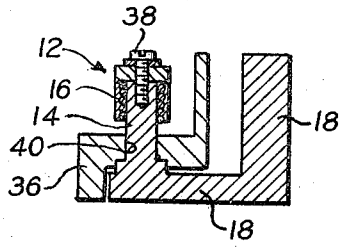

FIG. 8.

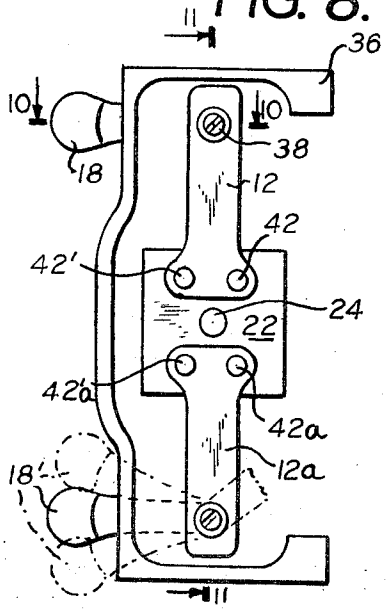

FIG. 9.

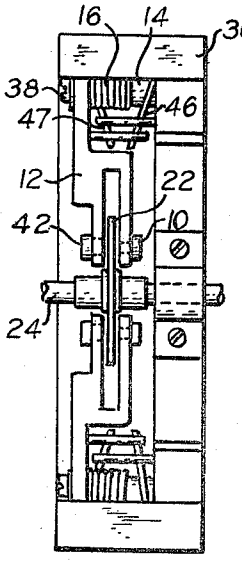

FIG. 11.

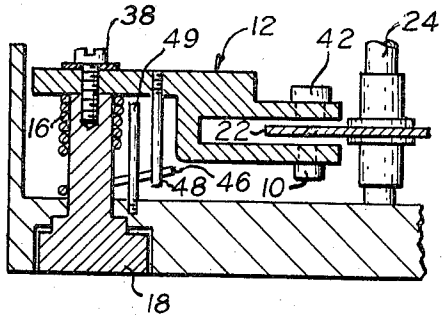

FIG. 12.

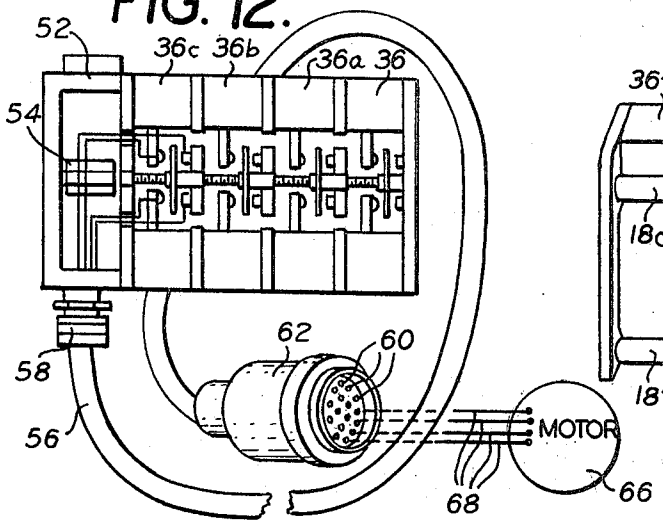

FIG. 13.

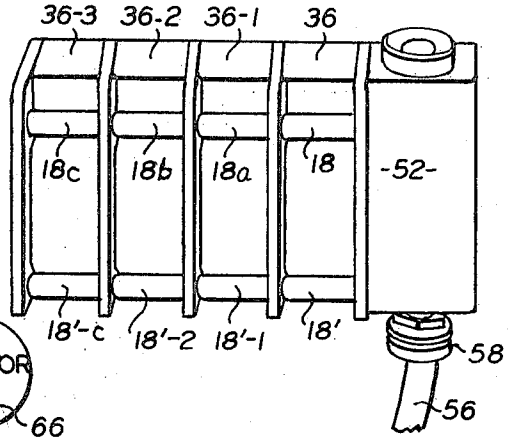

FIG. 14.

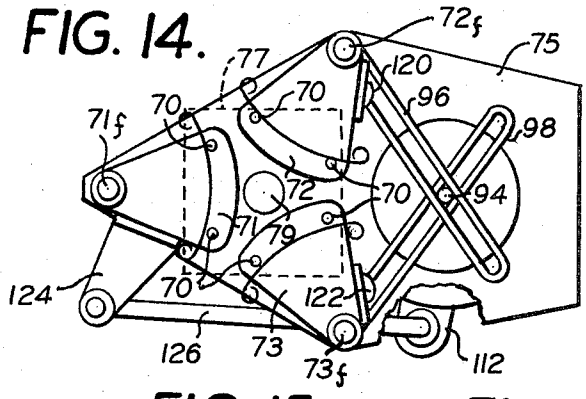

FIG. 16.

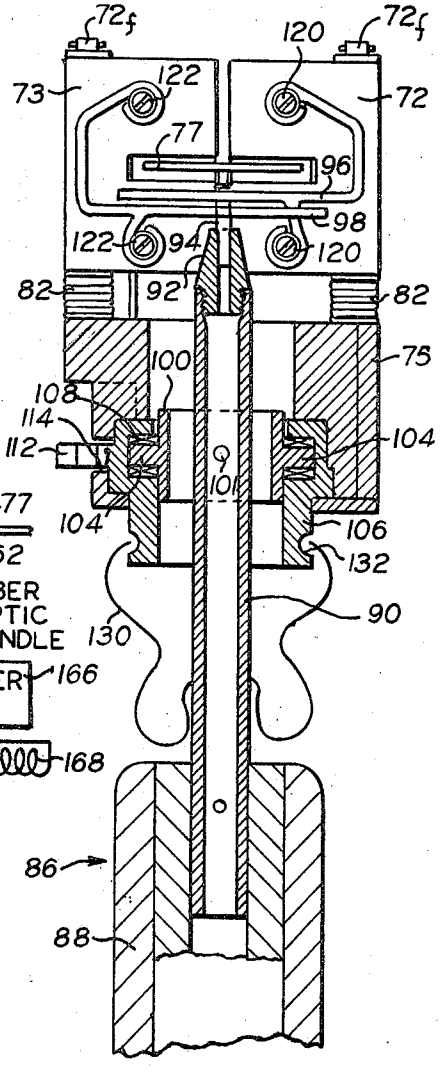

FIG. 15.

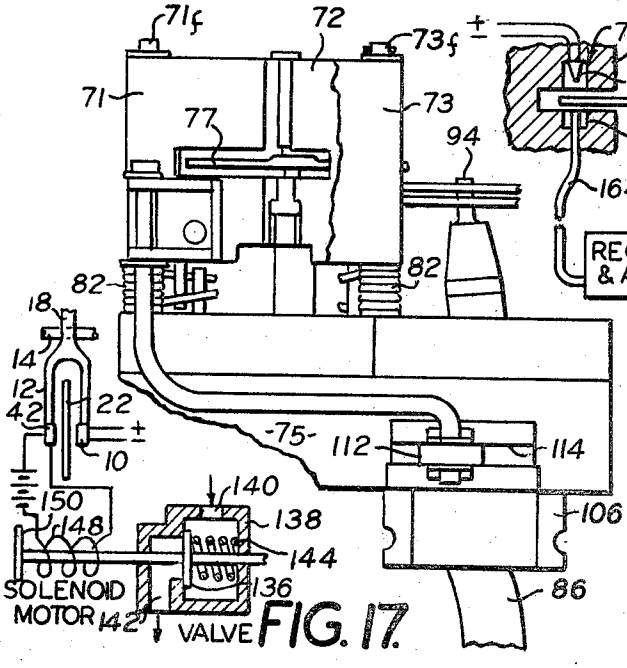

FIG. 17.

FIG. 18.

VALVE CONTROL WITH PULSE WIDTH MODULATION

BACKGROUND AND SUMMARY OF THE INVENTION

This invention is an improved control apparatus for supplying signals to an actuator; and the signals are modulated so as to change the strength of the signal in proportion to the desired position of the actuator. In order to obtain more reliable operation so that the actuator responds equally well when moving as when stationary, it is desirable to have a pulse signal of high enough frequency so as to apply a dither to the actuator and the mechanical element which the actuator moves.

The advantage of dither is that the mechanical parts are subjected to vibration which reduces or eliminates static friction. Since static friction is higher than dynamic friction, the reduction or elimination of static friction makes the response of the actuator to a particular signal much more uniform. The present invention provides improved means for obtaining signals that provide dither.

The use of light or other radiant energy, for pulse signals, is well-known; and the advantages of the present invention are that the signals can have higher frequency and by means of simple and reliable shields the pulses can be modulated so as to produce a signal of desired strength in accordance with the force required from the actuator.

Sources of radiant energy, such as incandescent lamps, cannot be lighted and extinguished quickly enough to obtain high frequency pulses; but this invention uses a form of shield that rotates rapidly. The light is maintained in a lit condition when the control apparatus is being used; and the pulses are produced by bringing a shield between the light and a light-responsive receiver. This invention can utilize a source of radiant energy which will be described as a "light," but which radiates at wave lengths beyond the visible range. Incandescent lamps are the preferred energy source because they produce a higher radiation intensity at lower cost than other energy radiators; and are also better suited for systems where the energy is to be carried by a fiber optic bundle.

The preferred embodiment of the invention rotates a non-circular plate, such as a square plate in such a way that the corners of the plate shut off the light to the receiver every time one of the corners passes across the path of the radiant energy. By changing the distance from the axis of rotation of the plate to the path of the radiant energy, the extent to which the plate intersects the path of the radiant energy can be adjusted and this modulates the pulses of radiant energy received by the light-responsive receiver.

The light can be received first by a fiber optic bundle, located behind the plate, and conveyed to a remote light-responsive receiver in cases where it is desirable to obtain electrical insulation of the ultimate receiver from the part of the apparatus where the radiation source is located.

Other features of the invention relate to constructions by which the source of radiant energy and the receiver are carried by a common bifurcated lever which locates the source of radiant energy on one side of the shield and the receiver on the other. The bifurcated lever can carry two sets of sources and receivers and be

arranged so that movement of the lever in one direction controls the apparatus to obtain movement of the actuator in one direction whereas movement of the lever in the opposite direction effects movement of the actuator in the opposite direction. Thus the actuator is responsible to the direction of movement of the lever that carries the sources and receivers of the radiant energy.

This invention also relates to various ways in which the modulated pulse signaling means can be constructed for multiple controls and with the apparatus of small size and miniaturized with various expedients for modular combinations of the control apparatus.

Other objects, features and advantages of the invention will appear or be pointed out as the description proceeds.

BRIEF DESCRIPTION OF DRAWING

In the drawing, forming a part hereof, in which like reference characters indicate corresponding parts in all the views:

FIG. **1** is a diagrammatic view showing a portion of a control mechanism of this invention and illustrating the way in which a rotating shield is combined with the energy radiating elements to control the pulses;

FIG. **2** is a view similar to FIG. **1** but showing the control apparatus with the energy radiating source in a different position to produce pulses when the shield rotates;

FIG. **3** is a view similar to FIG. **2** but showing the control apparatus in condition to produce longer pulses than when in the position shown in FIG. **2**;

FIGS. **4, 5** and **6** are graphs showing the effect obtained with the control apparatus in the position shown in FIGS. **1, 2** and **3,** respectively.

FIG. **7** is a view similar to FIG. **1,** but showing a different form of shield;

FIG. **8** is a detail view of a control apparatus made in accordance with the principle illustrated in FIGS. **1–3**;

FIG. **9** is an end view of the apparatus shown in FIG. **8**;

FIGS. **10** and **11** are enlarged, sectional views taken on the lines **10—10** and **11—11,** respectively, of FIG. **8**;

FIG. **12** is a diagrammatic view showing the way in which modular units such as shown in FIGS. **8** and **9** can be combined to make a more elaborate control apparatus;

FIG. **13** is a rear view of the control apparatus shown in FIG. **12**;

FIG. **14** is a plan view of one side of a modified control apparatus made in accordance with this invention;

FIG. **15** is a side view of the apparatus shown in FIG. **14**;

FIG. **16** is an enlarged end view of the apparatus shown in FIGS. **14** and **15,** the view being taken from the right side of FIGS. **14** and **15**;

FIG. **17** is a diagrammatic view showing the way in which the control apparatus of this invention is combined with an actuator for a mechanical element, such as a poppet valve; and

FIG. **18** is a diagrammatic view showing the invention with light conveyed to the light-responsive means through a fiber optic bundle.

DESCRIPTION OF PREFERRED EMBODIMENT

FIG. 1 shows a source of radiant energy **10**, such as a lamp, carried by a lever **12** which rocks about a fulcrum **14** and which is held in a center neutral position by springs **16** and **16'**. These springs press against a handle portion **18** of the lever **12** and whenever the lever is rocked clockwise or counterclockwise about its fulcrum **14**, the springs **16** and **16'** restore the lever to its mid neutral position whenever the force applied to the handle portion **18** is released.

The lever **12** and the radiant energy source **10** comprise a control element.

A shield or plate **22** is supported by an axle **24** for rotation about the axis of the axle. Radial spacing of the energy source **10**, when the lever **12** is in its neutral position, is less than the minimum radial dimension of the plate **22**.

In the illustrated construction, the plate **22** is square and with the plate in the position shown in full lines, the energy source **10** in some distance inward from the perimeter of the plate. Even when the plate **22** is rotated 45°, as shown in broken lines, the minimum dimension of the plate is adjacent to the energy source **10** but the energy source is still covered by the plate.

In the operation of the control apparatus, the axle **24** is rotated by motor means, as indicated by the arrow **26**. So long as the lever **12** remains in its mid or neutral position, as shown in FIG. **1**, the rotating plate **22** covers the energy source **10** and shields the energy source so that none of the radiant energy can reach an energy receiver, which will be described.

The lever **12**, shown ig FIG. **2**, also carries a second energy source **10'** which is located on a different branch of the lever **12** from the energy source **10**, but at a symmetrical location so that when the lever **12** is in its mid or neutral position, the energy source **10'** is always shielded by the plate **22**.

If the handle portion **18** of the lever **12** is moved counterclockwise, as shown in FIG. **2**, the energy source **10** is moved further from the axis of rotation of the axle **24** and its connected plate **22**. The energy source **10** is still covered by the plate **22** when a corner of the plate is adjacent to the energy source **10**. However, when the minimum radial dimension of the plate **22** comes adjacent to the energy source **10**, as indicated by the broken line position of the plate **22**, the energy source **10** is only partially shielded by the plate **22**.

Thus rotation of the plate **22**, when the energy source **10** is in the position shown in FIG. **2**, results in the energy source being partially uncovered by the plate four times during each revolution of the plate.

Movement of the handle portion **18** of the lever **12** further in a counterclockwise direction, to the position shown in FIG. **3** moves the energy source **10** still further from the axis of the axle **24**. The energy source **10** is now shielded by the plate **22** for only a short time as each corner of the plate passes across the energy source **10**. During the rest of the time, the energy source **10** is only partially shielded by the plate **10** and as the mid portion of each side of the plate comes adjacent the energy source **10**, the plate exerts no shielding action on the energy source.

FIG. **4** is a graph representing one cycle of operation of the control apparatus as shown in FIG. **1**. This cycle is a complete revolution of the axle **24** and its connected shield or plate **22**. The graph in FIG. **4** is divided into quadrants but the graph is uniform throughout the entire cycle and shows that no radiant energy from the source **10** is ever delivered to a receiver since the energy source **10** is always shielded by the plate **22**.

FIG. **5** shows the operation which results from the rotation of plate **22** with the lever **12** in the position shown in FIG. **2**. The chart in FIG. **5** begins at the zero angle which corresponds to the position of the plate **22** shown in broken lines in FIG. **2**. The shaded areas of the graph represent time when radiant energy is being supplied from the energy source **10** and not being shielded by the plate **22**.

As the plate **22** rotates, the edge of the plate soon moves all the way across the path of energy radiated by the energy source **10** and the energy source is thus completely shielded as indicated by the white area of FIG. **5**. A corner of the plate **22** moves across the energy source **10** at a time mid way between the zero and 90° indications on FIG. **5**. As the mid portion of the next side of the plate **22** approaches the energy source **10**, the energy source is uncovered part way and then covered again; the exposed period indicated by the shaded area symmetrical about the 90° indication on FIG. **5**.

In like manner pulses of energy are supplied from the partially shielded energy source **10** at the regions of 180°; 270° and 360°. Thus four signals of limited width are supplied by the energy source **10** for each cycle (revolution) of the plate **22**.

FIG. **6** shows the difference in the width of the pulses radiated by the energy source **10** when the lever **12** is in the position shown in FIG. **3** as compared with the width of the pulses when the energy source is closer to the axle **24** as in FIG. **2**.

The energy pulses, indicated by the reference character **30** in FIG. **5** and by the reference character **30'** in FIG. **6**, have the same frequency since the plate **22** is rotating at the same rate regardless of the movement of the lever **12**. The signal modulation obtained by moving the lever **12** is a pulse width change and represents an increased amount of radiant energy from the energy source **10** for each pulse.

The rotary speed of the plate **22** is high enough so that the frequency of the pulse signals **30** is high enough to produce a desired dither in the actuator and the element operated by the actuator under the control of the radiant signals.

It will be understood that if a different shape plate is used in place of the plate **22**, such as a hexagon instead of a square, the number of signals for each cycle of the plate will be higher. Also with certain actuators, it may be desirable to prevent the pulse bands from ever decreasing to zero as in the case of FIG. **4**. This can be avoided, even with the plate **22**, if notches are formed in the sides of the plate, such as notches **32** shown in FIG. **7**. These notches form openings in a plate **22'**, which is otherwise the same as the plate **22** of FIGS. **1–3**, and the openings insure a narrow pulse regardless of the position of the lever **12**.

FIGS. **8–11** show the construction of control apparatus made in accordance with the principle illustrated by FIGS. **1–3**. Parts corresponding to the parts in FIGS. **1–3** are indicated by the same reference characters even though the parts are somewhat different in shape but it should be understood that FIGS. **1–3** are merely

diagrammatic views of the control apparatus shown in FIGS. 8–10.

Referring first to FIG. 9, the lever 12 rocks about a fulcrum 14 near the top of a housing 36. The lever 12 is secured to one end of the fulcrum 14 by a screw 38 which makes the lever 12 and fulcrum 14 an integral unit.

The fulcrum 14 is actually a short length of shaft extending through a sidewall of the housing 36 as shown in FIG. 10. The handle portion 18 of the lever 12 is an integral part of the fulcrum 14 and in FIG. 10 is shown as being of one-piece construction with the fulcrum 14 and located on the outside of the housing 36 for convenient manipulation by an operator holding the housing 36. The fulcrum 14 is actually a part of the lever 12 which is offset from the lower portion of the lever so as to provide a bearing surface on which the lever 12 can turn where it passes through an opening 40 in the sidewall of the housing 36.

Referring again to FIG. 9, the lever 12 is bifurcated so that it extends downwardly with portions on opposite sides of the plate 22. The energy source 10 is carried by the bifurcation at the back of the plate 22 and a radiant energy receiver which is responsive to the energy from the source 10 is located on the other bifurcation of lever 12 in front of the plate 10. This radiation responsive receiver is indicated by the reference character 42 and it is in alignment with the radiation source 10. There is a similar radiation-responsive receiver 42′ (FIG. 8) in line with the energy source 10′ (FIG. 3), the relationship being the same as that of the energy source 10 and the energy receiver 42 in FIG. 9. However, the energy source 10′ and receiver 42′ are not visible in FIG. 9 since they are behind the source 10 and receiver 42.

The spring 16, for holding the lever 12 in a mid or neutral position, is a coil spring surrounding the fulcrum shaft 14 and it has its opposite ends 46 and 57 brought down behind spaced pins 48 and 49 which hold the spring 16 under tension with the pins 48 and 49 in a common plane. Rotation of the fulcrum shaft 14 in either direction causes the pin 48, which moves as a unit with the lever 12, to displace either the end 46 or 47 of the spring 16, depending upon the direction of displacement of the lever 12. Since the fixed pin 49 prevents the other end of the spring from moving, there is an increase in the pressure of the spring against the pin 48 urging the pin 48 and the other parts of the lever 12 back into mid or neutral position.

Referring to FIG. 8, it will be apparent that moving the handle portion 18 counterclockwise affects the shielding of the rotation-responsive receiver 42 from the energy source 10 (FIG. 9) by the relative movement of the energy source with respect to the axis of the axle 24 as already explained in connection with FIGS. 1–3. Movement of the handle portion 18 clockwise moves the other energy source 10′ (FIGS. 1–3) and energy receiver 42′ (FIG. 8) with respect to the axis of rotation of the plate 22 so that the plate no longer shields the energy source 10′ from the receiver 42′ and this provides a control which can be the opposite in effect; that is, a reverse, of the control exerted by the surce 10 and receiver 42 (FIG. 9).

The modular control apparatus shown in FIGS. 8–11 has another lever 12*a* at the lower end of the housing 36 for controlling the position of other radiation responsive receivers 42*a* and 42*a*′ with respect to the axile 24 of the plate 22. This lever 12*a* at the bottom of the housing 36 is connected with elements which are the same as those for the top lever 12 and it provides for different control signals from the control apparatus.

FIGS. 12 and 13 show the modular control apparatus in the housng 36 connected with similar control apparatus in other modular housings 36-1, 36-2 and 36-3. It will be understood that as many such housings can be connected together as desired. Each of these housings has a plate 22 and has energy sources and receivers and operating levers and other equipment the same as that described in connection with FIGS. 8–10.

A motor housing 52 is connected to one end of the group of housings 36-36-3; and all of the plates 22 are driven by a motor 54 in the motor housing 52. If the housing 36 and the apparatus contained therein are used without the other housing 36-1, 36-2 and 36-3, then the motor housing 52 is connected to the housing 36. No matter how many housings are joined in a control apparatus assembly, only one motor housing 52 is necessary.

The wiring to and from the energy sources and radiation-responsive receivers in the housings 36-36-3 are carried to the motor housing 42 and from the housing 42 enter a cable 56 leading outward through a connection 58 to the housing 52. This cable contains the conductors from all of the sources and receivers in the housing 36-36-3 and these individual conductors terminate at separate sockets 60 in a fitting 62 at the end of the cable 56 remote from the motor housing 42. A complementary fitting, not shown, has pins which extend into the sockets 60 and which join conductors in the cable of the other fitting for leading to actuator motors or other apparatus which is to be controlled. Such multi-connection fittings are well-known and no illustration is necessary for a complete understanding of this invention.

FIG. 12 shows a motor 66 digrammatically connected with the sockets in the fitting 62 by conductors 68. These conductors 68 provide power to the motor 62 for running the motor either forward or reverse, depending upon which of the conducturs 68 are energized. It will be understood that the connections to the motor, shown as direct in FIG. 12 for simpler illustration, may be indirect through amplifiers if the motor is large and the signal currents too weak to provide the motored power directly.

FIGS. 14–16 show a modified form of the invention. Energy sources and radiation-responsive receivers, one behind the other, are indicated by FIG. 14 by the reference characters 70. These source-receiver pairs are connected to bifurcated levers 71, 72 and 73 which rock about fulcrums 71*f*, 72*f* and 73*f*, respectively. The fulcrums extend upwardly from a housing 75. The levers 71, 72 and 73 are of substantial height and are of bifurcated construction so that they extend on opposite sides of a shielding plate 77 which is shown in dotted lines in FIG. 14 and in solid lines in FIG. 15.

All of the levers 71, 72 and 73 are symmetrically located around an axle 79 to which the plate 77 is connected, and this axle 79 is rotated by a motor in the housing 75. Each of the levers 71, 72 and 73 has a spring 82 (FIG. 16) by which the lever 71, 72 or 73 is held in a neutral position. The spring 82 is similar to the spring 16 shown in FIGS. 9–11.

The levers 71, 72 and 73 are rocked about their fulcrums 71*f*, 72*f*, and 73*f*, respectively, by a handle 86 which has a grip portion 88 secured to a hollow shaft 90 extending upward through housing 75. At the upper end of the hollow shaft 90 there is an adapter 92 which holds a pin 94. This pin 94 extends into slotted operating cranks 96 and 98 which are attached to the levers 72 and 73, respectively.

The hollow shaft 90 extends through a ring 100 (FIG. 16) and is connected to the ring by a pin 101 on which the hollow shaft 90 has rocking movement about the axis of the pin 101 in the plane on which the section view of FIG. 16 is taken.

The ring 100 has aligned studs 104 projecting from its circumference on diametrically opposite sides of the ring 100. These studs 104 project into a fitting 106 which is a part of the lower end of the housing 75 and there are bearings 108 in which the ring 100 is free to rock about the axes of the cylindrical projections 104. Because of the rocking movement of the pin 101 and the projection 104, which are at right angles to one another, the shaft 90 has universal rocking movement with respect to the housing 75.

The fitting 106 at the bottom of the housing 75 has limited rotary movement with respect to the housing about the axis of the hollow shaft 90. A crank arm 112 is of one-piece construction with the fitting 106 and extends through a slot 114 in one side of the housing 75. The length of this slot 114 determines the angle of movement of the fitting 106. Rotation of the handle 86 about the axis of the shaft 90 causes the crank 112 to move angularly along the slot 114.

Referring again to FIG. 14, the operating crank 96 is secured to the lever 72 by screws 120. The operating crank 98 is secured to the lever 73 by screws 122. These screw connections make the operating levers 96 and 98 an integral unit with their respective levers 72 and 73.

When the handle is rocked to move the pin 94 in a direction lengthwise of the slot through the operating crank 96, the crank 96 does not move and the lever 72 remains stationary; but the operating lever 98 is moved and causes the lever 73 to rock about its pivot 73*f* and to move its source and receiver pairs 70 with respect to the axis of the plate shaft 79.

Similarly when the pin 94 moves in the direction of the slot in the operating crank 98, the lever 73 does not move but the lever 72 is rocked about its axis 72*f*. Movement of the pin 94 in any other direction causes both of the operating cranks 96 and 98 to move simultaneously; the degree of movement of each of these cranks depending upon the direction of movement of the pin 94.

Thus the handle 86 can be operated with its universal rocking movement to change the pulse width of the pulses generated by the source and receiver pairs 70 carried by the levers 72 and 73. In order to change the pulse widths controlled by the source and receiver pairs 70 of the lever 71, the handle 86 is rotated about its axis so as to move the crank 112 angularly about the axis of the handle. There is an operating crank 124 extending from and forming an integral part of the lever 71. This operating crank 124 is connected by a link 126 to the crank 112 so that angular movement of the crank 112 produces corresponding angular movement of the lever 71 about its fulcrum 71*f*.

In the construction illustrated there is a flexible boot 130 which fits around the shaft 90 near the grip portion 88 and which has its other end engaged in a circumferential groove 132 near the bottom of the fitting 106. This boot 130 provides a seal closing the lower end of the housing 75 and at the same time permits rotary and rocking movement of the hollow shaft 90.

FIG. 17 is a diagrammatic showing of a valve 136 in a valve housing 138. When the valve is in closed position it shuts off the flow of fluid from an inlet port 140 to an outlet port 142. The valve 136 is urged into closed position by a spring 144; and the valve has a stem 146 extending through an electric coil 148.

When the coil 148 is energized, it attracts an armature 150 at the end of the valve stem 46 and causes the armature 150 and valve stem 146 to move to the right, in FIG. 17, against the force of the spring 144 so as to open the valve 136.

FIG. 17 shows the coil 148 energized from a battery in series with the coil 148 and with the flow of current controlled by the light-responsive receiver 42. It will be understood that the actual circuit of the light responsive receiver 42 and the actuator coil 148 will include any necessary amplifiers and relays and other usual equipment for circuits where light-responsive elements of small capacity are used to control actuators requiring heavier currents and greater variations in current than obtained in the light-responsive controller 42.

FIG. 18 shows the bifurcated lever 71 of FIGS. 14 and 15 with the shielding plate 77 extending between the elements of the enrgy source and receiver pair 70. This energy source and receiver pair include a radiant energy source 160 which is preferably an incandescent lamp; and includes also an energy receiver 162 which includes the upper end of a fiber optic bundle 164; the end faces of the fibers being in position to receive light from the incandescent lamp 160 when the light is not shielded from the receiver 162 by the shielding plate 77.

The fiber optic bundle 164 leads to a light-responsive receiver 166 at a remote location from the bifurcated lever 71. In order to permit free movement of the upper end of the bundle 164 to accommodate movement of the lever 71, the portion of the bundle 164 adjacent to the lever 71 extends in a direction generally parallel to the axis about which lever 71 rocks when operated to move it about its fulcrum axis as already explained in connection with FIGS. 14–16.

The light-responsive receiver 166 includes a photo transistor, photo multiplier, or other light-responsive device in position to receive light from the lower end of the fiber optic bundle 164. This light-responsive receiver 166 also includes an amplifier and such other circuitry as is conventional for using weak signals to operate apparatus that requires considerably higher current intensity.

The output from the light-responsive receiver 166 is supplied to a coil 168 which is representative of a magnetic actuator, signal, indicator, recording device, or other device which is to be operated in response to the pulse energy transmitted through the fiber optical bundle 164.

The preferred embodiment of the invention has been illustrated and described, but changes and modifications can be made, and some features can be used in different combinations without departing from the invention as defined in the claims.

What is claimed is:

1. Control apparatus for supplying different amounts of electrical energy through a circuit in accordance with the displacement of a control element, including in combination a source of radiant energy that directs an energy beam along a path, a radiation-responsive receiver in a control circuit and in position to receive radiant energy from said source and to control the power in the circuit in proportion to the radiant energy received, said receiver being in a fixed position with respect to the path of the beam, a radiant energy shield between the source and the receiver, said shield having a peripheral edge that is of different radius at angularly spaced locations along said peripheral edge and that is movable into and out of the path of the beam, and motor means connected with the shield for moving the shield through a cycle, the control element being movable for changing the relative positions of the shield and the path of radiant energy to change the portion of each cycle during which the shield moves into the path of the beam to shut off radiant energy supplied along said path from the source to said receiver.

2. The control apparatus described in claim 1 characterized by the shield being a plate that rotates about an axis, a portion of the plate intersecting the path of the radiant energy during the cycle of movement of the plate.

3. The control apparatus described in claim 2 characterized by the adjustment device being movable into different positions to shift the path of radiant energy and the axis of rotation of the plate closer to and further from one another to change the percentage of the cycle during which the plate shields the receiver from the radiant energy from said source.

4. The control apparatus described in claim 2 characterized by a housing in which the plate, sources and receivers are enclosed, the controller being a lever with a portion enclosed in the housing and to which the source and receiver are connected, said lever extending through a wall of the housing, a handle portion of the lever outside of the housing, the housing being of modular construction, and a similar modular housing enclosing similar structure, and a lever extending through a wall of the similar housing, means connecting the housings together into a control apparatus assembly with the axes of rotation of the plates in substantial alignment with one another.

5. The control apparatus described in claim 4 characterized by a plurality of housings, similar plates, sources and receivers in the different housings, means connecting the housings together with the axes of rotation of the plates in alignment and axles of the plates operatively connected together, a single motor at one end of the connected housings for driving all of the plates, a lever extending through the wall of each of the housings, with handles in similar positions on the levers at the different housings, conductors connected with the different sources and receivers, and a common cable leading from one end of the housing assembly and containing extended portions of said conductors.

6. The control apparatus described in claim 2 characterized by the plate having angularly spaced depressions at its peripheral edge correlated with the positions of the source and receiver to permit passage of at least a portion of the radiant energy from the source to the receiver when the apparatus is adjusted for maximum shielding of the path of radiant energy.

7. The control apparatus described in claim 1 characterized by there being a second source of radiant energy and a second radiation-responsive receiver in position to receive energy from said second source, the radiant energy shield being in position to shield both of the receivers from their sources of energy, the control element being connected with both of the receivers and both of the sources of energy and movable into different positions to selectively alter the percent of each cycle during which each path of radiant energy is obstructed by the shield.

8. The control apparatus described in claim 7 characterized by the control element having a mid position in which the shield has maximum shielding effect on both the paths of radiant energy, and the control element being connected with the receivers and sources so as to decrease the effect of the shield on one path of radiant energy when moved in one direction and on the other path of radiant energy when moved in the opposite direction.

9. The control apparatus described in claim 1 characterized by a frame that supports the source, receiver and shield, the control element including a handle portion extending from the frame, a connector portion extending longitudinally through a part of the frame, and bearing means in which the control element rocks about an axis transverse of the direction of longitudinal extent of the connector portion.

10. The control apparatus described in claim 11 characterized by a frame that supports the source, receiver and shield, the control element including a handle portion extending from the frame, other bearing means about which the handle portion of the control element rocks about another axis at an angle to the direction of extent of the first axis to give the controller universal rocking movement transverse of the direction of longitudinal extent of said connector portion.

11. The control apparatus described in claim 10 characterized by there being a plurality of source and receiver assemblies supported by the frame for controlling different circuits, connections between the connector portion and one source and receiver assembly for controlling only the influence of the shield on that source and receiver assembly when the handle rocks about one axis only, and connections between the connector portion and another source and receiver assembly for controlling only the influence of the shield on said other source and receiver assembly when the handle rocks about the other axis only, both of the source and receiver assemblies being influenced when the handle rocks about both axes simultaneously.

12. The control apparatus described in claim 11 characterized by bearing means in which the handle portion of the control element is also rotatable about its longitudinal axis in addition to its rocking movement, a third source and receiver assembly supported by the frame, a crank operatively connected with the handle portion and that moves angularly about the longitudinal axis of the handle portion when said handle portion is rotated about its axis, and a link connecting the crank with the third source and receiver assembly for moving the third source and receiver assembly in response to said rotation of the handle portion, the link being connected with the handle portion so as to avoid transmitting motion of the rocking movement of the handle portion to the third source and receiver assembly.

13. The control apparatus described in claim 12 characterized by a plate constituting the shield for all of the receiver and source assemblies, each of the receiver and source assemblies including a bifurcated lever extending on both sides of the plate, the levers being located at angularly spaced locations around the periphery of the plate, each of the levers having a bearing on which it has oscillating movement to both sides of a neutral center position, springs holding each of the levers in its neutral position, an operating crank extending from a first of said levers and having a slit extending in the direction of movement of one end of the handle portion when the handle portion rocks about one of its axes of rocking movement, another operating crank extending from a second of said levers and having a slit extending in the direction of movement of one end of the handle portion when the handle portion rocks about the other of its axes of rocking movement, an operating crank extending from a third of said levers, the third of said levers being connected by said link to the crank which is operated by rotation of the handle portion but not by the rocking movement of the handle portion about either of its transversely extending axes that impart the universal rocking movement to the handle portion.

14. The control apparatus described in claim 1 characterized by a frame that supports the source, receiver and shield, a digital element including a handle portion extending from the frame, the handle portion being rotatable about its longitudinal axis, a crank arm extending from one side of the handle portion, means connecting the crank arm and the handle portion for angular movement of the crank arm when the handle portion is rotated, said connections preventing angular movement of the crank during rocking movement of the handle portion, and a motion-transmitting link between the crank and the portion of the control element that extends nearest to the shield.

15. Control apparatus for supplying different amounts of electrical energy through a circuit in accordance with the displacement of a control element, including in combination a source of radiant energy, a radiation-responsive receiver in a control circuit and in position to receive radiant energy from said source and to control the power in the circuit in proportion to the radiant energy received, a radiant energy shield between the source and the receiver, said shield having a peripheral edge that is of different radius at angularly spaced locations along said peripheral edge, and motor means connected with the shield for moving the shield through a cycle, the control element being movable for changing the relative position of the shield and the path of radiant energy with respect to one another to change the portion of each cycle during which energy is supplied from the source to said receiver, characterized by the control element including a movable carrier, the source of radiant energy and the receiver being located adjacent to the movable carrier and one of them being connected to and movable as a unit with the movable carrier.

16. The control apparatus described in claim 15 characterized by the movable carrier being a bifurcated lever with the bifurcated portions thereof extending on different sides of the plane of movement of the shield, and the receiver and the source of radiant energy being carried by the lever and on the bifurcated portions thereof so that said receiver and source of energy are on opposite sides of the shield.

17. Control apparatus for supplying different amounts of electrical energy through a circuit in accordance with the displacement of a control element, including in combination a source of radiant energy, a radiation-responsive receiver in a control circuit and in position to receive radiant energy from said source and to control the power in the circuit in proportion to the radiant energy received, a radiant energy shield between the source and the receiver, said shield having a peripheral edge that is of different radius at angularly spaced locations along said peripheral edge, and motor means connected with the shield for moving the shield through the cycle, the control element being movable for changing the relative position of the shield and the path of radiant energy with respect to one another to change the portion of each cycle during which energy is supplied from the source to said receiver, characterized by the shield being a plate that rotates about an axis, a portion of the plate intersecting the path of the radiant energy during the cycle of movement of the plate, and further characterized by the control element extending on both sides of the plate, the receiver and the source of energy being carried by said control element and located on opposite sides of the plate from one another, the control element being movable to shift the receiver and source of energy toward and from the axis of rotation of the plate to change the percent of time that the path of radiant energy is obstructed by the peripheral portion of the plate during each cycle of rotation of the plate about its axis.

18. The control apparatus described in claim 17 characterized by the control element being a lever that swings angularly about an axis substantially parallel to the axis of rotation of the plate to locate the receiver and source of energy in position to have the radiant energy pass between them intersected by peripheral portions of the plate for greater or lesser portions of each cycle of rotation of the plate as the receiver and source of energy are moved closer to and further from, respectively, the axis of rotation.

19. The control apparatus described in claim 18 characterized by there being two sources of radiant energy, and a separate receiver for each source of radiant energy, the different receivers and sources being at different locations angularly around the periphery of the plate, and both of the receivers and sources being movable toward and from the axis of rotation of the plate.

20. Control apparatus for supplying different amounts of electrical energy through a circuit in accordance with the displacement of a control element, including in combination a source of radiant energy, a radiation-responsive receiver in a control circuit and in position to receive radiant energy from said source and to control the power in the circuit in proportion to the radiant energy received, a radiant energy shield between the source and the receiver, said shield having a peripheral edge that is of different radius at angularly spaced locations along said peripheral edge, and motor means connected with the shield for moving the shield through a cycle, the control element being movable for changing the relative position of the shield and the path of radiant energy with respect to one another to change the portion of each cycle during which energy is supplied from the source of said receiver, characterized by

there being a second source of radiant energy and a second radiation-responsive receiver in position to receive energy from said second source, the radiant energy shield being in position to shield both of the receivers from their sources of energy, the control element being connected with both of the receivers and both of the sources of energy and movable into different positions to selectively alter the percent of each cycle during which each path of radiant energy is obstructed by the shield, and further characterized by the shield being a plate that rotates about an axis, the control element including a bifurcated lever that has portions that extend on opposite sides of the plate, the receivers and sources of energy being carried by said lever with each receiver on an opposite side of the plate from its source of energy, each source and receiver being on a different side of the axis of rotation of the plate so that swinging movement of the lever moves one source and receiver away from the axis of rotation of the plate and at the same time moves the other source and receiver closer to the axis of rotation of the plate.

21. The control apparatus described in claim **20** characterized by spring means that hold the lever in a neutral position in which the shield has minimum effect on the path of radiant energy on both sources and receivers, and spring means that oppose movement of the lever from neutral position in either direction and that restore the lever to its neutral position when the force displacing the lever therefrom is released.

22. The control apparatus described in claim **21** characterized by the different sources and receivers being in different electric circuits, one of which connects with motor means for operating said motor means in one direction and the other of which connects with the same motor means but through connections that operate the motor in the opposite direction.

23. The control apparatus described in claim **22** characterized by a housing in which the plate, plate-driving motor, sources and receivers are enclosed, the lever comprising a crank within the housing, a shaft secured to the crank and extending through a sidewall of the housing, and a handle portion of the lever secured to the shaft outside of the housing.

24. The control apparatus described in claim **20** characterized by there being a plurality of bifurcated levers at different angular positions around the plate with receivers and sources of radiant energy carried by each of the levers, and the receivers and sources on each lever being connected in a different circuit from those of any other lever.

25. The control apparatus described in claim **24** characterized by each of the levers being movable independently of any other lever, and a different handle portion connecting with each of the levers and separate from the other handle portions, a housing in which the plate, receivers and sources are enclosed, the handle portions being outside of the housing and in position for manual operation of the levers from outside of the housing.

26. Control apparatus for supplying different amounts of electrical energy through a circuit in accordance with the displacement of a control element, including in combination a source of radiant energy, said source of radiant energy being an incandescent lamp, a radiation-responsive receiver being light-responsive and being located at a remote location from the lamp and being electrically insulated from the environment of the lamp, a fiber optic bundle with one end in position to receive light from said lamp and the other end in position to transmit light to the light-responsive receiver, a radiant energy shield between the source and the fiber optic bundle in the environment of the lamp, said shield having a peripheral edge movable into a position between the lamp and the fiber optic bundle, said peripheral edge being of different radius at angularly spaced locations along said peripheral edge, and motor means connected with the shield for moving the shield through a cycle, the control element being movable for changing the relative position of the shield and the path of radiant energy to change the portion of each cycle during which energy is supplied from the source to the receiver, whereby movement of the control element produces variable width pulses of energy at the receiver.

27. The control apparatus described in claim **26** characterized by electric motor means to which energy is supplied from the receiver, a mechanical element operated by the electric motor means into different positions depending upon the amount of energy supplied from the radiant energy source to the receiver, the energy received by said motor means being in pulses having the frequency of the cycle of the shield operation, and the total energy being a function of the length of the pulse in each cycle, the mechanical element being made more delicate in its operation as the result of dither imparted thereto by the frequency of the energy pulses supplied to said electric motor means.

28. The control apparatus described in claim **27** characterized by the electric motor means being an electromagnet connected with the mechanical element for pulling the mechanical element in one direction, yielding loading means pulling the mechanical element in the opposite direction whereby the position of the mechanical element at any time depends upon the balance of the motor pull and the opposite pull of the yielding load means.

29. The control apparatus described in claim **28** characterized by the mechanical element being a poppet valve that controls flow of fluid under pressure, the poppet valve being balanced as to the pressure of the fluid that it controls.

* * * * *