Jan. 28, 1941. H. McCURDY 2,229,860

HELICAL CENTRIFUGAL SEPARATOR

Filed Nov. 14, 1938

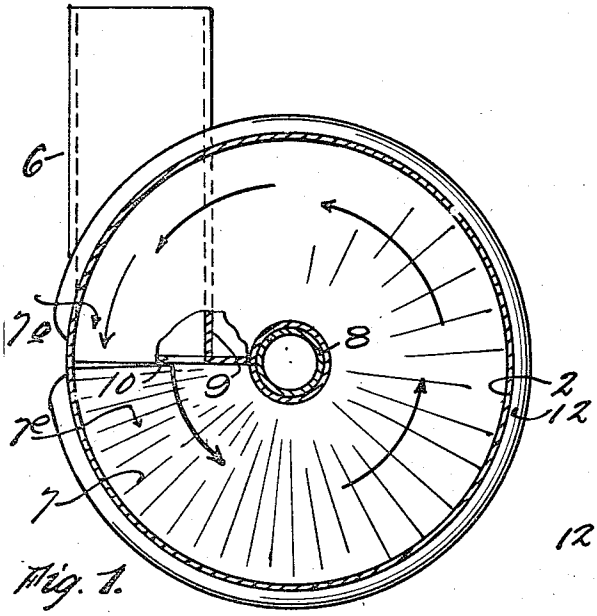

Fig. 1.

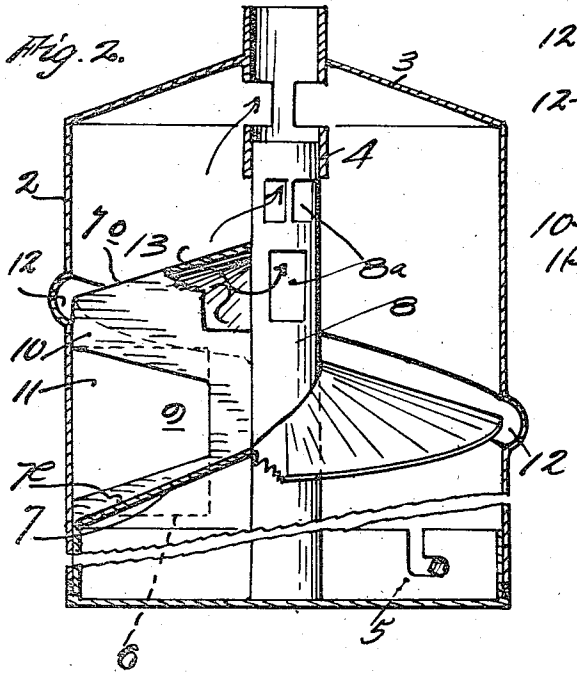

Fig. 2.

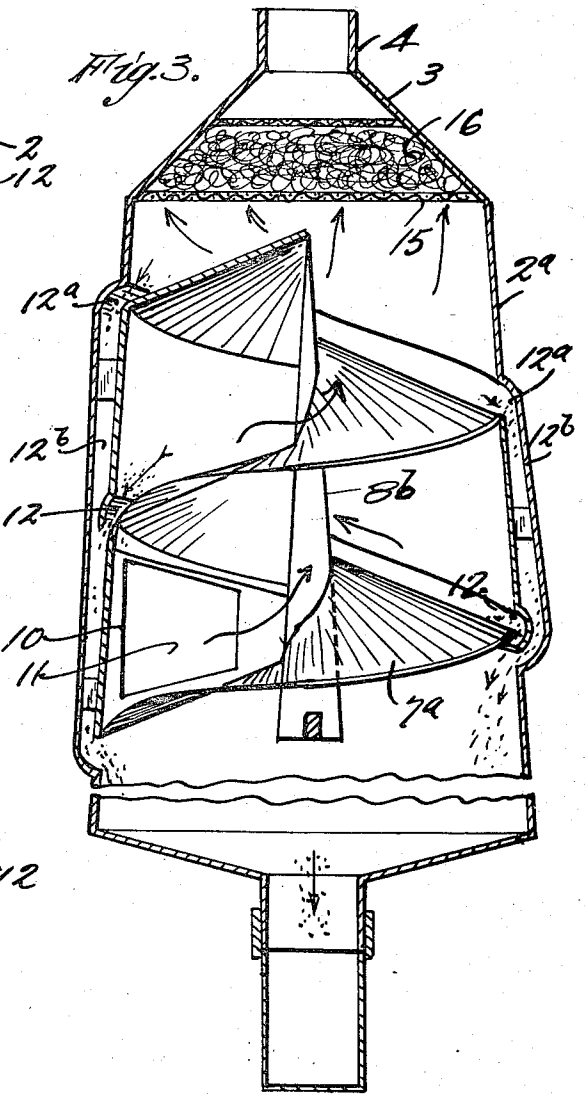

Fig. 3.

Inventor,
Howard McCurdy;
By his Atty
Frederick E. Maynard

Patented Jan. 28, 1941 2,229,860

UNITED STATES PATENT OFFICE

2,229,860

HELICAL CENTRIFUGAL SEPARATOR

Howard McCurdy, Walnut Park, Calif.

Application November 14, 1938, Serial No. 240,357

8 Claims. (Cl. 183—79)

This invention is a centrifugal separator for operation on fluids; that is gaseous and liquid media, either for the separation of solids from the fluid, or gas from liquids, or to separate different gravities of liquids, or to classify granular solids.

It is an object of the invention to provide an extremely simple, practical, substantial, effective and efficient device wherein to obtain aid of centrifugal force by causing a circular motion to the given fluid stream, which may be under either vacuum induction or forced draft effect, or otherwise caused flow.

A further object of the invention is to provide means to impart a helical movement to the medium being treated so that a full circle of movement, at least, may be effected between the inlet and the outlet of the device; and especially an object is to provide a separating chamber having a perimetal wall of full circle length about its axis and without any intrusive area along the circular wall to set up eddies or to impede a full, uninterrupted circular sweep of the medium so that full advantage may be had of centrifugal energy in a full circular orbit of uninterrupted character.

An additional object is to provide a helical chamber or passage having an effective surface or ramp, as it may be called, which has a downwardly oblique attitude as to a normal transverse plane horizontally across the axis of the helix. That is, to provide a bottom or ramp surface which is helical as to the axis but is also of a slant out and down from the axis whereby to utilize a self-discharging angle effect to help unload the ramp of any collected sediment.

Another object is to provide for the relatively free discharge of separated media perimetally from the rim of the ramp as the fluid being treated may continue its passage helically along the circular chamber, between fluid inlet and fluid outlet ports.

It is also an object to provide a fluid separator of this type provided with an automatic discharge for a heavy, separated part of the flowing medium and to provide for the ready removal of the discharge means through the top of the separator to avoid of breaking seams or joints in the trap part of the apparatus.

The invention consists of certain advancements in this art as will be set forth in the ensuing disclosure and having, with the above, additional objects and advantages as hereinafter developed and whose constructions, combinations and details of means will be made manifest in the description of the herewith illustrative embodiments; it being understood that modifications, variations and adaptations may be resorted to within the scope, principle and spirit of the invention as it is more directly claimed herein below.

An object is to provide a centrifugal separator having a helical ramp or partition element and an inlet onto the ramp in an arrangement of structure whereby to effect inflow of fluid onto the ramp face free of any centrifugal reaction of the fluid which has passed the first turn of the ramp. In other words the incoming fluid is not impacted by adverse eddies from the body of fluid rotating in the shell chamber and that has made an advance on the first turn of the ramp; the rotary motion that initiated on the ramp and its ascending moment is harmoniously continued by the body of fluid that runs off of the upper end of the ramp.

Figure 1 is a horizontal section, above and showing the ramp in one form of the separator, and

Figure 2 is an axial, vertical section thereof; showing a single pitch, helical chamber floor or ramp, and its shell, as in a simple dust separator adaptation, or air cleaner.

Figure 3 is a vertical, axial section of a modified form showing a plurality of pitch turns of the helix; as used in an air cleaner, or fluid separator.

In Figs. 1 and 2 there is shown a cylindrical shell 2 of suitable height and diameter having an outlet dome 3 concentrically provided with an outlet tube 4. Removably attached to the lower end of the shell is a basin or flanged bottom 5 telescopically fitting the shell. Extending tangentially from one side of the shell is an inlet conduit 6 whose outer side from the axis of the shell is directly tangent to the circle of the wall of the shell.

It is a feature of this invention that the chamber of the shell presents an unobstructed, circular wall face to a stream of fluid discharged into the chamber by the inlet conduit 6. To obtain such an uninterrupted circular wall for a full circle of sweep of the fluid in the shell there is here provided, what is substantially the bottom of the effective separating chamber, a helical shelf or ramp 7, on a vertical or substantially vertical axis, and which ramp has a top surface which, at all radii from the center, tilts obliquely outwardly and downwardly toward its perimeter to facilitate gravitational flow of such component of the treated fluid as settles on the ramp.

In Figs. 1 and 2, this ramp is fixed to a central vortex tube 8 fixed to the basin 5 and the ramp 7 telescopes into and from the shell 2 in association with the basin for convenience of inspection and cleaning. In this removable form of ramp unit, of single pitch length, the inlet conduit 6 matches with the near end of a mouth cell 9 having a vertical mouth plate 10 which is directly radial to the tube 8 and stands up from the lower or entry end 7e of the ramp 7 to the upper or off end 7o of the ramp, Fig. 1.

The radial plate 10 has an opening 11 from the near end of the inlet tube so that the fluid pours from the tube on a tangent between the inner and the outer side lines of the lower end of the ramp and thence flows upwardly thereon directly against the wall of the shell for a full circle and, in the case of a single coil ramp, (Fig. 2,) when the fluid has completed its first turn at the top edge 7o of the ramp the fluid continues to travel on in the same circular direction of rotation along the shell wall free of obstruction or current interference.

The whirl of the fluid casts the heavier parts outward and the lighter part is drawn or driven out of the outlet 4, as the nature of the use will determine. The down pitch of the surface of the ramp 7 as to the normal from the axis of the helix greatly aids in rolling or blowing the sediment on the ramp toward its perimeter and to get rid of this off-cast as soon as possible entirely along the rim of the ramp, which in Fig. 2 is a thin or plate body, there is provided a complementary, helical discharge groove or channel 12 in the face of the shell immediately opposite the contiguous edge of the thin helix or ramp 7. This channel opens from above the top of the ramp edge and discharges back into the shell chamber below the edge of the ramp so that the heavy fluid content spills toward the basin 5 to be caught for removal at will.

As there may be a tendency for the air below the ramp to rotate upward under the ramp there is provided, in the upper part of the mouth plate 10 and near the post 8, outlet 13 for the upflow of this air to vortical ports 8a at top of the tube 8. This outlet is well above the inflow mouth 11, but it is to be observed that the current in each is of unidirectional motion.

There is illustrated in Fig. 3, an adaptation of the invention for cleaning a travelling body of air, as for instance, passing to the intake of combustion motors. The shell 2a is here shown as downwardly flaring to give a favorable slant to its inner wall face thus increasing the rapidity of fall of the cast-off media. Here the ramp 7a is of more than one helix length and though the shell wall flares the transverse width of the top face of the ramp is preferably kept uniform; its inner edge or corner line following a central, conical post 8b. The wall of the shell has opposite the rim of the sheet-like ramp, a discharge channel 12, as above mentioned, and which is of the helical length of the first helix, and the shell is also provided with a separate helical channel 12a opposite the near edge of the next turn of the ramp; in this case the discharged cast-off falls in an outer pocket 12b which opens at its lower end into the shell chamber below the channel 12. The ramp 7a provides a helical space of more than one full turn in the shell and the rotary motion of the moving air stream centrifugally throws off the heavier dust portion. To effect further cleaning of the air it cyclically engages the lower foraminous bed 15 of a suitable filter mass 16 of any kind and filters up through this mass to the outlet 4. The air inflows through the supply mouth plate 10 from a tangential or other intake connection. Here the ramp is of uniform pitch and decreasing radii.

Referring again to Figs. 1 and 2, it will be seen that the incoming fluid is given a complete circle of cyclonic whirl in the helical chamber over the ramp 7 to obtain the first centrifugal effect; then such fluid as may bend down into the channel 12 and reverse its flow over the rim of the ramp, imparts a second centrifugal action, the whirl of the fluid around and upward under the lower face of the ramp shelf has a further centrifugal action, and finally as the fluid tends to swirl with a vortical movement toward the central outlet ports 8a of the vortex tube 8 additional centrifugal throw is produced. The upper end of the vortex tube 8 may be removably but snugly fitted in the near lower end of the outlet tube 4 for ready removal of the ramp 7 and its vortex tube 8.

It is understood that according to the use of the separator, the flow of the fluid stream may be in either direction along the helical-ramped passageway, and it is understood that the invention may be used for the separation of the heavier media from either gaseous or from liquid streams; whether the media is of liquid or solid, or gas from gas.

What is claimed is:

1. A centrifugal separator including a cylindrical shell having a smooth, unobstructed, inner, annular wall and having a helical ramp making a helical passageway in the chamber of the shell and along its wall, and a radial wall extending inwardly from the shell wall and joining with axially spaced pitch parts of the ramp and having an inlet port for flow of fluid onto a part of the ramp facing the radial wall; the ramp having an upper terminal so disposed as to the radial wall that the fluid moves and merges harmoniously with the stream incoming at the said inlet in a helical ascent in the shell chamber.

2. A centrifugal separator including a vertical, cylindrical shell, presenting a smooth, unobstructed, inner peripheral wall, having a helical ramp therein of suitable length and making a helical passageway along the wall and forming a partition dividing the shell chamber into an upper, velocity-reducing, discharge space and a lower "still" fluid and ejecta settlement basin, an outlet in the said upper space part of the shell chamber for fluid discharge, a fluid inlet means having a discharge end terminating in the shell space on a plane radial to the shell and above the upper face of the ramp for discharge of the stream into the shell chamber for flow along its wall; there being a helical, ejecta escape aperture along and complementary to the margin of the ramp adjacent the shell wall and leading to the "still" space whereby the discharge of the ejecta to the basin is effected without up-draft against its descent.

3. A separator having a cylindrical shell provided with a fluid inlet discharging into the shell on an axis normal to a radial plane of the shell and eccentric to the shell axis, a helical ramp in, and around the axis of, the shell; a removable basin under the ramp for cast-off material from the fluid turning along the axis of the shell while moving along the ramp; the ramp being fixed to and removable with the basin and the rim of the ramp being spaced from the shell wall to provide for escape of the said material to the basin.

4. A centrifugal separator including a cylindrical shell having a helical ramp extending inwardly from a point adjacent the inner wall surface of the shell and on a vertical axis in the shell, said ramp being of at least one pitch in length, and a vertical wall extending inwardly from the shell wall in a radial plane connecting the lower end of the ramp coil and an upper portion thereof at one full pitch from the point of start of the ramp, and an inlet tube terminating in said radial wall and having a fluid discharge orifice in the radial wall for discharge normal therefrom onto the ramp.

5. The separator of claim 4, and a central post about which the ramp winds; there being an orifice continuously along the margin of the ramp for escape of cast-off material from fluid on the ramp to the shell space covered by the ramp.

6. A centrifugal separator having a shell provided with a vertical, inner, cylindrical face, a helical ramp about the axis of the said face and the first coil of the ramp dividing the shell chamber into an upper outflow passageway and a still fluid basin therebelow and the rim of the ramp being spaced from the said face for peripheral discharge of precipitates from the fluid on the ramp to the still fluid in the basin, and a fluid inlet to the shell chamber and having the plane of its discharge end radial to the said face and contiguous to and above the lower end of the ramp whereby to effect a unidirectional flow of all fluid in the chamber above the ramp.

7. A centrifugal, fixed-element type of separator including a shell having a vertical, cylindrical chamber having an upper reduced velocity space with an outlet for flowing fluid, a helical ramp for fluid to said chamber and whose rim is spaced from the wall of the chamber to form a continuous orifice thereat and said ramp forming a cover to a basin space in the shell and to which ejecta from fluid on the ramp is precipitated, an inlet means discharging into the shell space between the portions of the ramp forming its first coil turn and on a line of discharge perpendicular to a radial plane from the chamber axis to effect a helical flow on the ramp with the least commotion in the incoming stream, and means including a radially disposed barrier part below the first turn of the ramp to stop rotation of the fluid under the ramp.

8. A centrifugal separator including a cylindrical shell provided with an inlet tube having its discharge end in, and on a plane radial to, the shell, an outlet from the shell, and the shell having a helical element of at least one turn beginning at said discharge end to receive inflowing fluid thereat and there being a helical channel between the rim of said element and the shell wall for gravitational discharge of cast-off material from the upwardly flowing and rotating stream on the said element, and the said shell having a still fluid space below the said element and into which the cast-off material precipitates without other resistance than that of the still fluid below the said element.

HOWARD McCURDY.