C. A. RANDALL.

PERFORATING APPARATUS FOR ELECTRIC TELEGRAPHS.

No. 193,672. Patented July 31, 1877.

Fig. 2.

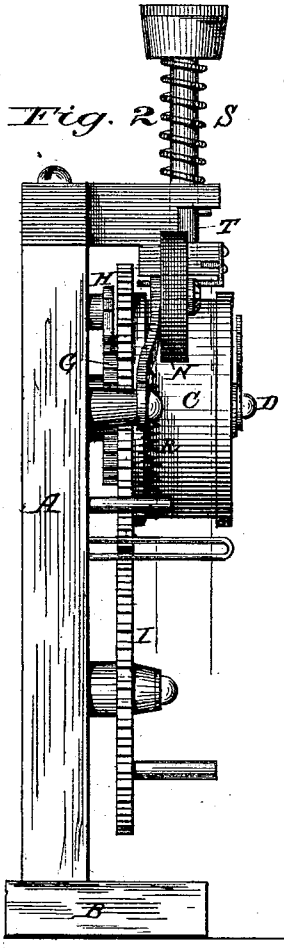

Fig. 1.

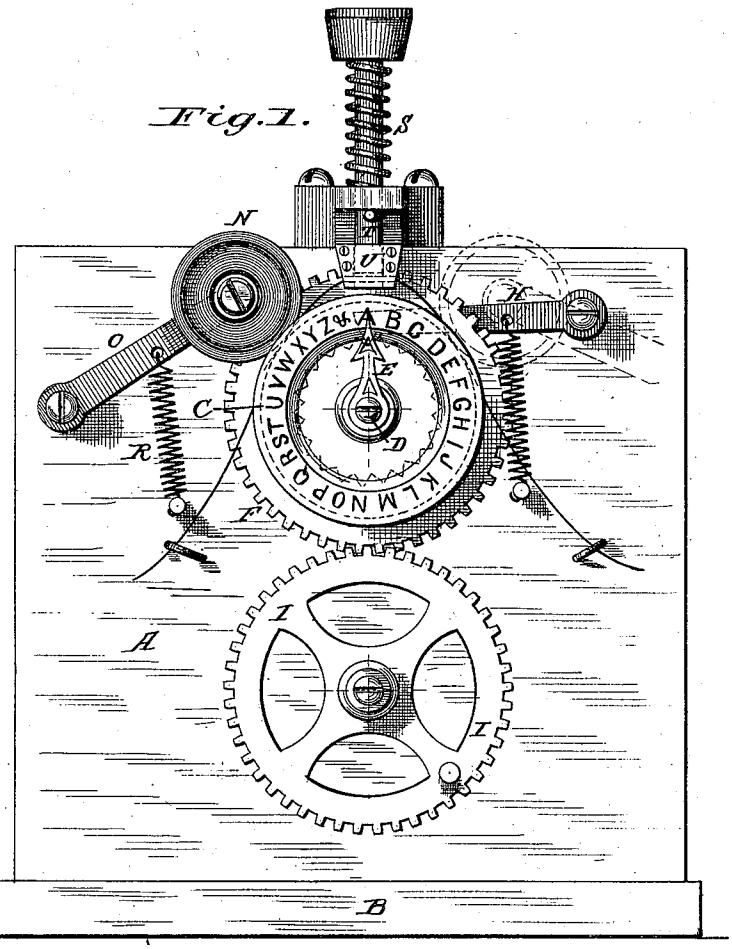

Fig. 3.

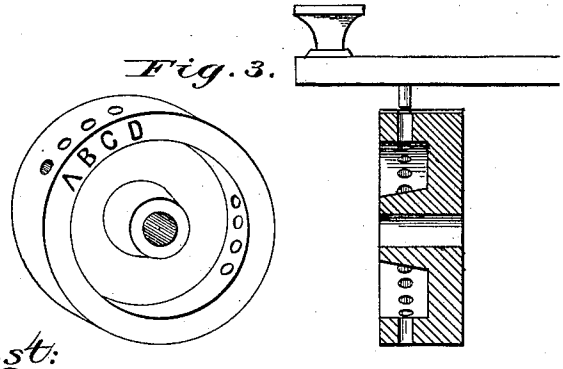

Attest:
H. L. Perrine
J. S. Coombs.

C. A. Randall.
Inventor.

By. James L. Norris.
Attorney.

N. PETERS, PHOTO-LITHOGRAPHER, WASHINGTON, D. C.

UNITED STATES PATENT OFFICE.

CHARLES A. RANDALL, OF NEW YORK, N. Y.

IMPROVEMENT IN PERFORATING APPARATUS FOR ELECTRIC TELEGRAPHS.

Specification forming part of Letters Patent No. **193,672**, dated July 31, 1877; application filed November 15, 1876.

To all whom it may concern:

Be it known that I, CHARLES A. RANDALL, of New York, in the county of New York and State of New York, have invented certain new and useful Improvements in Perforating Apparatus for Electric Telegraphs, of which the following is a specification:

This invention relates to a new and improved apparatus for perforating the strips of paper employed in certain telegraphic apparatus for forming the signals in the transmitting-instrument, being particularly designed for perforating the strips employed in my improved Roman-letter system of telegraphing, as set forth in an application now pending in the United States Patent Office.

In said improved system it is necessary to have the perforations representing the letters to be arranged relatively and corresponding to the same letters on the type-circuit wheel of the receiving-instrument; and my invention is designed to furnish a convenient hand-instrument, by means of which the proper perforations may be accurately and rapidly formed by hand.

My invention consists in a drum or roller mounted on a suitable journal and provided with suitable gearing, by which it may be rotated. Said drum is of the same diameter as the type-circuit wheel, or type-wheel, in the receiving apparatus, and is provided upon its front face with an alphabet, the letters of which correspond exactly in position with the letters of the alphabet of the type-wheel of the receiving-instrument. This drum or wheel is adapted to carry the strip to be perforated, and the shaft on which it revolves is provided with a pointer or finger, which indicates when the wheel is in proper position for the perforation of an aperture corresponding to a particular letter. Above said drum is arranged a perforating-punch, through which the strip of paper is carried by the action of the drum, and which can, at proper intervals, be operated to cut through the paper.

In the drawing, Figure 1 is a front elevation of my improved perforating apparatus. Fig. 2 is an end view; Fig. 3, view of a modification thereof.

In the drawing, the letter A represents a rectangular standard, mounted upon a suitable support or base, B. To the front face of said standard is secured a rotating drum, C, upon a suitable journal, D, the said drum being of the same diameter as the type-wheel of the receiving-instrument, to be employed in connection with the perforated strips. The drum on its face is provided with an alphabet, the letters of which correspond in their relative positions exactly with the letters on the type-wheel of the receiving-instrument, and the journal is provided with a pointer or finger, E, for indicating when the drum is in proper position for the perforation corresponding to any particular letter. To the rear face of the drum is secured a gear-wheel, F, and a ratchet-wheel, G, and pawl H, the gear-wheel meshing with a driving-wheel, I, by which the drum may be put in motion, the ratchet wheel and pawl causing the drum to be arrested with the center of the letter which the pointer designates directly opposite the pointer.

M represents a spring, secured to the upright standard, for throwing the pawl into the ratchet-teeth. The letter N represents a friction-wheel, mounted upon one end of a rod, O, pivoted to the upright standard, which is caused to bear upon the paper upon the drum by means of a spring, R, and cause it to travel with the drum. The letter S represents the punching device, which is secured to the upper end of the vertical standard, and is provided at its front end with a punch, T, and cutting-die U, the paper being carried between the upper face of the die and the punch in a recess formed between the die-plate and the lower face of the support which carries the die and punch, the ends of the paper passing down through guides at each side of the same.

In the modification shown in Fig. 3 the die-plate is dispensed with, and the periphery of the wheel, at proper intervals, is perforated, each perforation, in conjunction with the punch, operating as a cutting-die for its particular perforation.

The drum may be covered with copper or rawhide, if desired, for the reception of the end of the punch, and the punch may be operated by means of a suitable lever, instead of directly by hand.

The operation of my invention will be readily understood from the foregoing description.

The paper being in proper position, the drum is rotated in the proper direction, so as to bring the proper letters successively in line with the pointer, and the paper is perforated by a stroke upon the punch, and, as the letters are all relatively placed to correspond with those of the type-wheel of the receiving instrument, it is evident that the perforations will be made with the utmost accuracy.

Instead of arranging the letters on the face of the drum, they may be arranged in a larger circle upon a separate support, so as to be more distinct, with the pointer affixed to the drum or its shaft, and rotating therewith.

What I claim, and desire to secure by Letters Patent, is—

1. In combination with a fillet of paper or other non-conducting substance, the rotating paper-feed drum C, of the same diameter as the type-circuit wheel of the receiving apparatus, and the punch S T and die U, the whole arranged substantially as described.

2. The combination, with a fillet of paper or other non-conducting substance, of the paper-feed drum C, rotated by the movement of the fillet of paper and constructed of the same diameter as the type-circuit wheel of the receiving apparatus, and the punch T and die U, substantially as described.

In testimony that I claim the foregoing I have hereunto set my hand in the presence of the subscribing witnesses.

CHAS. A. RANDALL.

Witnesses:

JAMES H. AYMAR,

WALTER H. TENNEY.