W. W. WATSON.

KNOCKDOWN ROLLER SCREEN.

APPLICATION FILED AUG. 10, 1914.

1,135,563.

Patented Apr. 13, 1915.

4 SHEETS—SHEET 1.

Fig. 1.

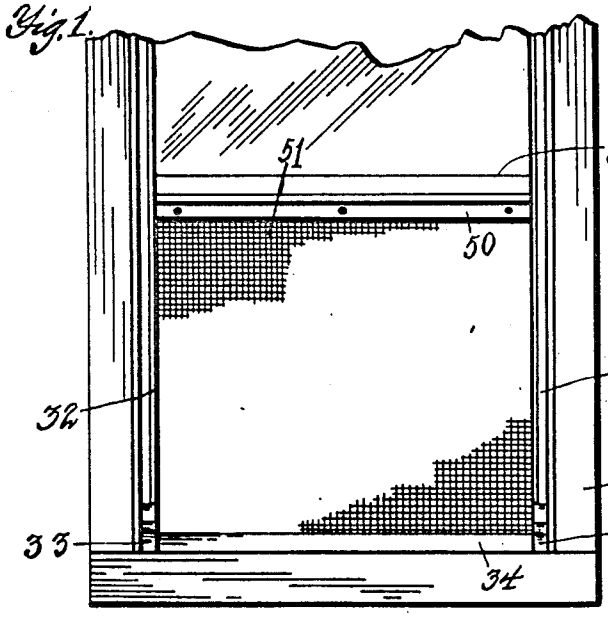

Fig. 2.

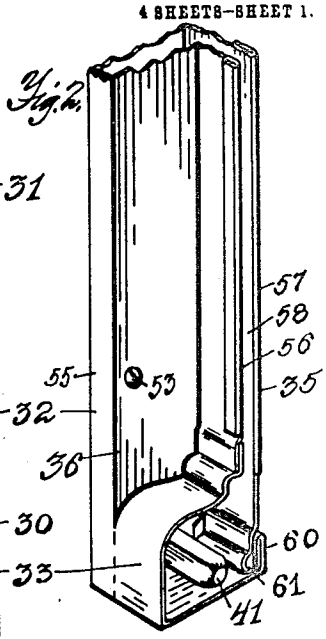

Fig. 3.

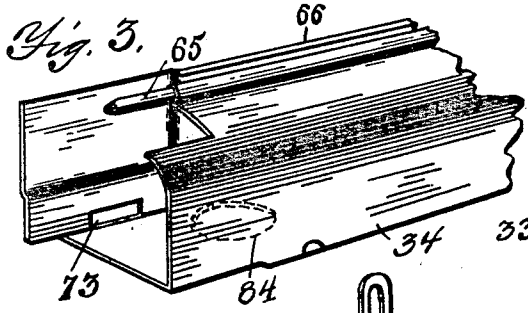

Fig. 4.

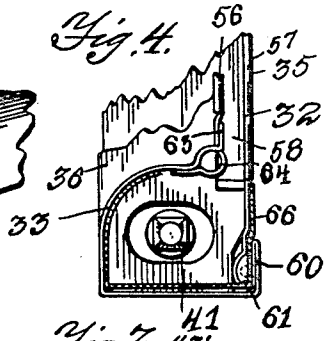

Fig. 5.

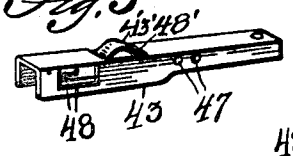

Fig. 6.

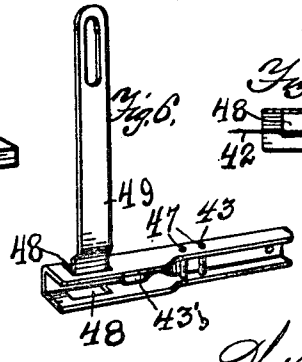

Fig. 7.

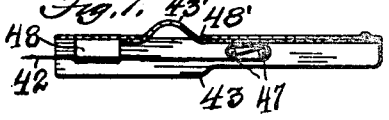

Witnesses

Harold Forsberg.

H. A. Sandberg.

Inventor

William W. Watson

By S. Arthur Baldwin.

Attorney

THE NORRIS PETERS CO., PHOTO-LITHO., WASHINGTON, D. C.

W. W. WATSON.

KNOCKDOWN ROLLER SCREEN.

APPLICATION FILED AUG. 10, 1914.

1,135,563.

Patented Apr. 13, 1915.

4 SHEETS—SHEET 2.

Fig. 8.

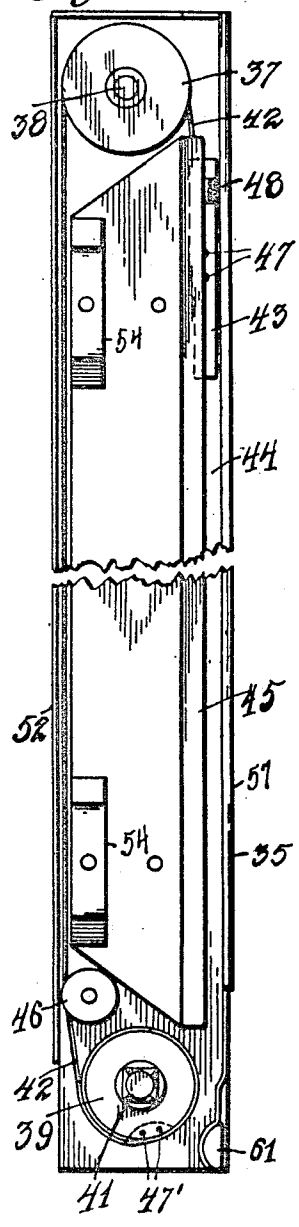

Fig. 9.

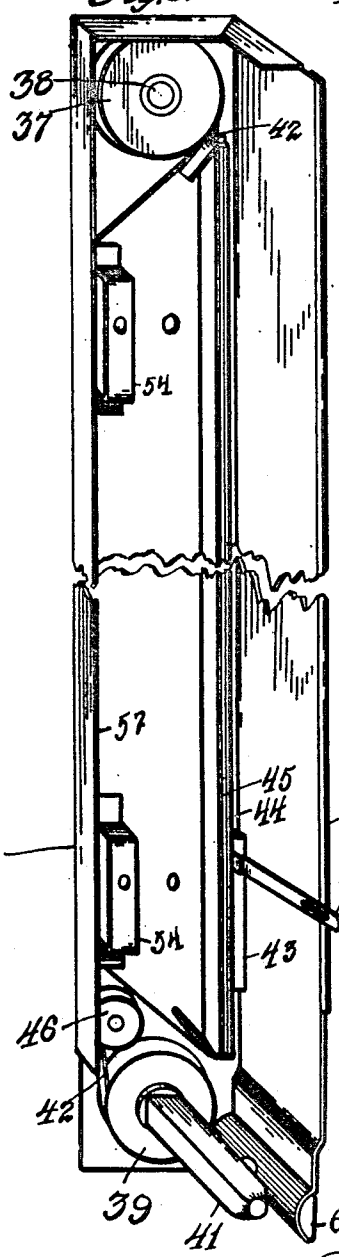

X Fig. 10.

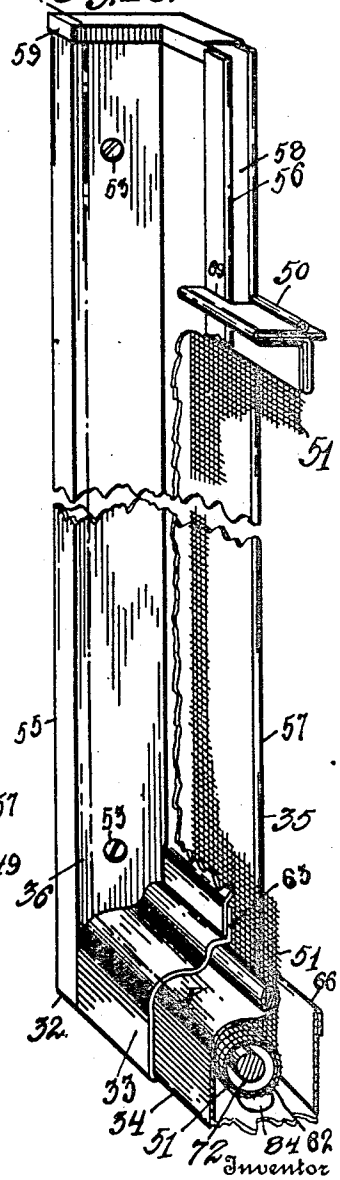

Witnesses

Harold Forsberg.

Haslandberg

Inventor

William W. Watson

By S. Arthur Baldwin,

Attorney

THE NORRIS PETERS CO., PHOTO-LITHO., WASHINGTON, D. C.

W. W. WATSON.

KNOCKDOWN ROLLER SCREEN.

APPLICATION FILED AUG. 10, 1914.

1,135,563.

Patented Apr. 13, 1915.

4 SHEETS—SHEET 3.

Fig. 11.

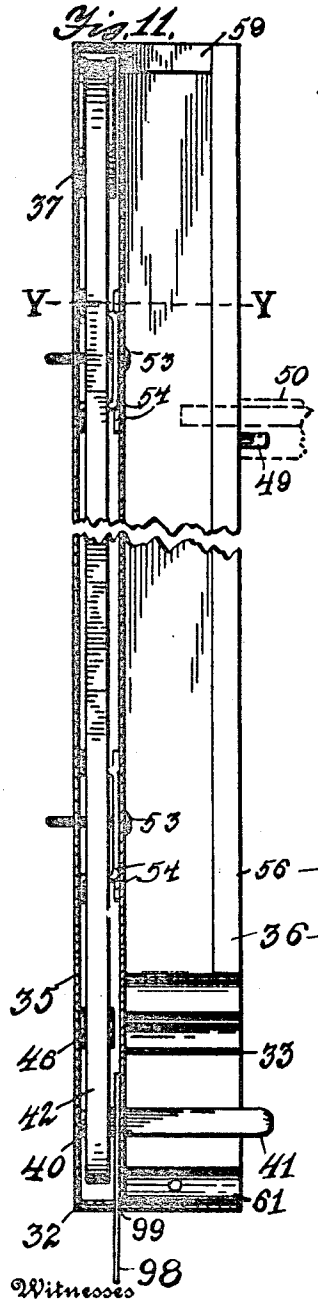

Fig. 12.



Fig. 13.

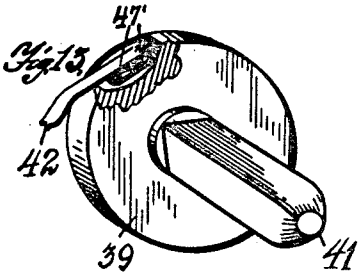

Fig. 14.

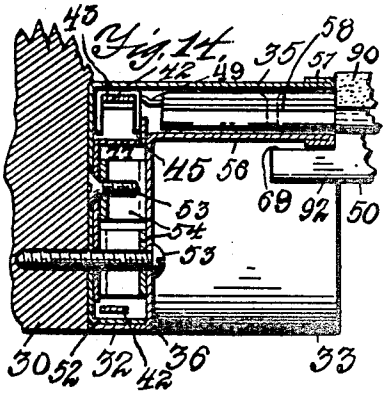

Fig. 15.

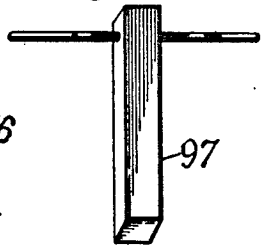

Fig. 16.

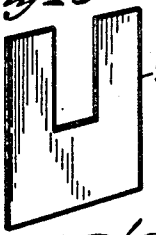

Witnesses

Harold Forsberg.

H. A. Sandberg.

Inventor

William W. Watson

By S. Arthur Baldwin

Attorney

THE NORRIS PETERS CO., PHOTO-LITHO., WASHINGTON, D. C.

W. W. WATSON.

KNOCKDOWN ROLLER SCREEN.

APPLICATION FILED AUG. 10, 1914.

1,135,563.

Patented Apr. 13, 1915.

4 SHEETS—SHEET 4.

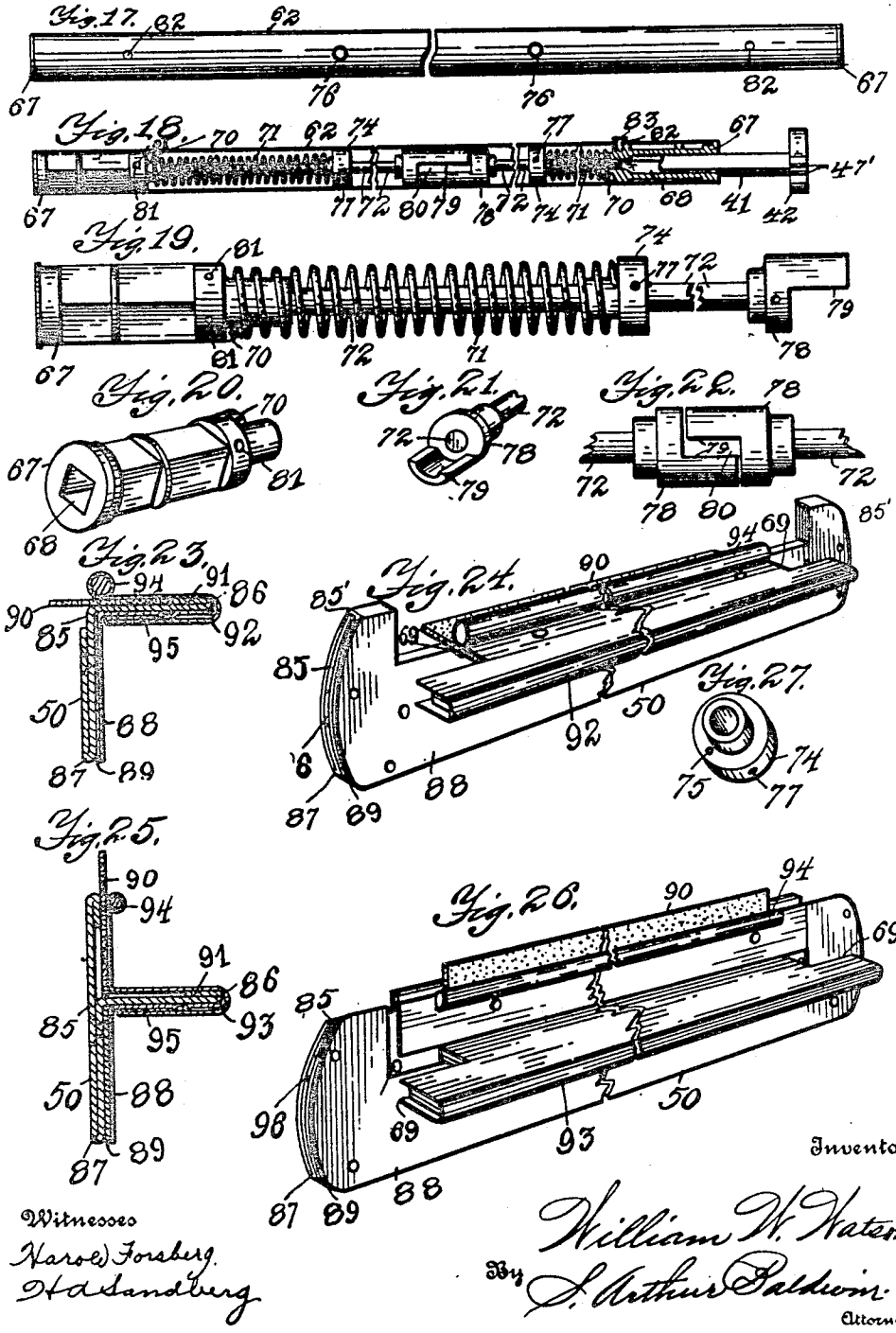

Witnesses
Harold Forsberg.
H. A. Sandberg.

Inventor
William W. Watson
By L. Arthur Baldwin.
Attorney

THE NORRIS PETERS CO., PHOTO-LITHO., WASHINGTON, D. C.

UNITED STATES PATENT OFFICE.

WILLIAM W. WATSON, OF JAMESTOWN, NEW YORK.

KNOCKDOWN ROLLER-SCREEN.

1,135,563. Specification of Letters Patent. Patented Apr. 13, 1915.

Application filed August 10, 1914. Serial No. 856,073.

To all whom it may concern:

Be it known that I, WILLIAM W. WATSON, a citizen of the United States, residing at the city Jamestown, in the county of Chautauqua and State of New York, have invented certain new and useful Improvements in Knockdown Roller-Screens, of which the following, taken in connection with the accompanying drawings, is a specification.

The invention relates to roller window screens and is an improvement upon the roller screen construction shown in the application for spring rollers filed August 10th, 1914, Serial No. 856,074, showing substantially the same subject matter but claiming different features; and the object of the improvement is to provide a more simple and durable knock-down frame and screen mechanism which gives a stronger and more reliable acting roller screen construction; and the invention consists in the novel features and combinations hereinafter set forth and claimed.

In the drawings, Figure 1 shows a front elevation of the lower portion of a window frame having a roller screen mounted therein, with the sash in the raised position and the screen withdrawn from the roll to cover the space in the frame below the sash. Fig. 2 is a perspective view of the lower portion of one of the side cases of the screen frame, showing the arrangement of the open-ended hood on the same for the reception of the end of the crosswise or connective casing for the two side cases and which houses the spring roll; and Fig. 3 is a perspective view of the end of said crosswise casing which fits into the lower end of the side case, as shown in Fig. 2; and Fig. 4 is an elevation of said lower portion of the side casing showing the arrangement of the different parts. Figs. 5 and 6 show perspective views of the channel-shape guide pieces for the end of the operating tape within the side case; and Fig. 7 is a lengthwise sectional view of said guide piece showing the preferred manner of attaching the tape thereto and the friction spring for the same. Fig. 8 is an elevation of the open side case, showing the tape and pulleys for raising and lowering the screen fabric and the guide piece and the channel or chute for the guide piece; Fig. 9 is a perspective view of the same; Fig. 10 is a perspective view of the closed side case and a portion of the screen and spring roll for the screen and the housing for said roll, the spring being shown partially unrolled, and the top cross-bar and spring roll and case are shown in section; and Fig. 11 is a lengthwise sectional view of the closed side case at line X X in Fig. 10, showing the construction and arrangement of the parts. Fig. 12 is a perspective view of the inner side of the cover of the side case, showing the construction and arrangement of the parts. Fig. 13 is a perspective view of one of the lower pulleys, showing the shaft extending out therefrom and the side of the pulley broken away to show the preferred form of tape attachment thereto. Fig. 14 is a crosswise sectional view of the side case at line Y Y in Fig. 11, showing the construction and arrangement of the parts and the end of the top cross-bar for the screen fabric extending thereinto, the remainder of said cross-bar being broken away. Fig. 15 is a perspective view of the wrench or key for setting the tension of the springs in the spring roll by turning the tubular end plugs in said spring roll. Fig. 16 is a simple locking plate for holding the lower pulleys of the side cases with the tape in the rolled position until all the parts of the screen are assembled, after which said tape may be released by the withdrawal of said locking plate. Fig. 17 is an elevation of the spring roll with the central portion broken away; Fig. 18 is a lengthwise sectional view of the spring roll with the central portions each side of the adjustable joint in the connective rod broken away, showing the end plugs and the connective rods for said plugs with the adjustable take-up or compensation joint in the central portion of said rods and the arrangement of the coil springs on said rod and attached to said plugs at one end and to attaching rings within the tubular roll at the other; and Fig. 19 is a side elevation of one part of said connective rod, a portion of which is broken away, and showing the plug attached thereto and the attaching ring thereon with the tension spring in position, and also showing one-half of the take-up joint. Fig. 20 is a perspective view of one of the end plugs for the tubular roll; Fig. 21 is a similar view of one of the end parts forming the central take-up connection for the parts of the connection rod; and Fig. 22 is an elevation of said take-up joint, the connecting rods being

broken away each side of the joint. Fig. 23 is a crosswise sectional view of the top cross-bar of the screen fabric with the weather strip extending sidewise to press against the side of the window frame; and Fig. 24 is a perspective view of said cross-bar with the central portion broken away and showing the form of the connective end portions. Fig. 25 is a crosswise sectional view of the top cross-bar for the screen fabric with the weather strip extended vertically to press against the under side of the window sash; and Fig. 26 is a perspective view of said cross-bar with the central portion broken away, and showing the connective ends of said cross-bar. Fig. 27 is a perspective view of one of the attaching rings or plugs for the inner end of the tension coil spring roll.

Like numerals of reference refer to corresponding parts in the several views.

The numeral 30 designates the window casing, and the numeral 31 the window sash and glass.

The knock-down roller screen mechanism consists of the two side cases 32, which are precisely alike except that they are rights and lefts, and hooded lower ends 33 opening toward one another, as shown in Fig. 1, to receive the crosswise roll case 34 which connects the side cases 32. Each of the side cases 32 consists of the lengthwise channel strip 35 next to the casing and the cover strip 36 which shuts over the channel strip 35. The two strips are attached to the window frame or casing 30 by the screws 53 through both strips.

The operating pulleys 37 and 39 and tape 42 are mounted within the channel strip 35. Said pulleys comprise the top pulley 37 which is revolubly mounted on a stud 38 attached to the channel strip 35, and a lower pulley 39 which is revolubly mounted on a stud 40 which is also attached to the channel piece 35. The pulley 39 has a short square shaft or attaching pin 41 extending therefrom toward the opposite side case 32. The operating tape 42 is attached to the pulley 39 over two spaced pins 47′ by extending around the pins and back beneath itself in locking engagement and then up over the top pulley 37. The tape is then attached to a guide piece 43 which is slidably mounted within a channel or chute 44 in the channel strip 35, the channel 44 being formed by means of an angular sheet metal strip 45 which is attached lengthwise to the inner side of the channel piece 35.

The lower pulley 39 must be of sufficient size to receive over half of the operating tape 42 when the screen is unrolled. A guide pulley 46 is revolubly mounted on a suitable stud attached to the channel piece 35 just above the pulley 39 to guide the tape 42 so that it will draw true upon the upper pulley 37, the guide pulley 46 preferably having channeled edges to hold the tape 42 in line.

The guide piece 43 is preferably made in the form of a channel piece with the two cross pins 47 therein a spaced distance apart to receive the end of the tape 42 around the same in locking attachment, the same as the double pin attachment in pulley 39, as shown in Figs. 5, 6, 7 and 8. This manner of attaching the end of the metal tape holds it firmly yet is easy of quick attachment thereto or detachment therefrom. A slot 48 is provided through the side walls of the channel strip 43 to receive the headed connecting pin or strip 49 therein for attachment to the top cross-bar 50 of the screen fabric 51. The pin or strip 49 is insertible into an opening 96 in the end of the top cross-bar 50. An opening 48′ is provided in the bottom of the channel piece 43 and a leaf spring 43′ is attached in the bottom of the channel piece 43 and has a sidewise bend through the opening 48′ which bears against the side of the channel 44, thereby holding the channel strip 43 firmly in line as it works up and down in the channel 44.

The lengthwise guide strip 45 serves as a separator or spacer between the channel strip 35 and the cover strip 36 as well as to form the chute 44. The two strips 35 and 36 are attached to one another by means of screws 53 which engage the spacing brackets 54, so that by the removal of the screws 53 the channel strip 35 with the operating mechanism therein is exposed for repair.

The cover strip 36 is formed with the oppositely turned flanges or lengthwise edges, one flange 55 fitting over the outer flange edge 52 of the channel strip 35 and the other flange edge 56 is held by the screws 53 a spaced distance from the inner flange edge 57 of the channel or guide slot 58 between the flanges 56 and 57 to receive in said slot 58 the pin 49, connecting the top cross-bar 50 to the channel guide strip 43 as it is moved upward and downward by the tape 42 in raising and lowering the screen 51. The upper end 59 of the cover strip 36 is also turned in a flange to form a cap for the upper end of the side case 32, and the upper end of the channel strip 35 is turned in the opposite direction to thereby hold the upper ends of the flanges 56 and 57 firmly in line. The lower end of the cover strip 36 has the open-ended hood 33 formed thereon for the reception of the crosswise roll casing 34 which receives therein the spring roller 62 to which the screen fabric 51 is attached and upon which it is rolled. The open-ended hood 33 is attached at its upper end to the cover strip 36 by means of the upturned lap 63

which is welded or otherwise attached to the flange 56 of the cover strip 36. The inner portion of said upper end of the open-ended hood 33 is turned downward to form a tube 64 and welded to the inner side of the hood 33, as shown in Fig. 4, to receive in tube 64 the end 65 of the binding wire in the upper edge of the housing 34. The end of the roll case 34 is formed to fit within the open-ended hood 33 so that it may be slipped into or out of the same, the end 65 of the binding wire entering the tube 64, thereby holding the side case 32 and the roll case 34 firmly together and in position within the window frame, yet allowing adaptation between said cases to the side of the window frame.

The roll case 34 is simply a tubular casing having its rear side 66 extending up about even with the binding wire 65 on the front portion of the roll case but a spaced distance therefrom to provide a slot for the ingress and egress of the screen fabric 51 as it rolls upon or unrolls from the spring roller 62. The ends of the rear side 66 extend out the full width of the lower ends of the side case 32. The lower end of the flange 57 extends down within the open-ended hood 33 and has the rear portion 60 of the hood 33 extended up a spaced distance from said lower end of the flange 57. A short bar 61 is attached to said lower end of the flange 57 and the end of the rear side 66 extends between the upturned flange 60 and the bar 61 to receive a screw into said bar 61 through a slot 73 in the roll case 34, the slot 73 permitting the adjustment or adaptation of the parts of the casing to the window frame 30.

The roll 62 is preferably made from metal tubing. An end plug 67 is provided for each end of the tubular roller 62 which plug is fitted to turn freely while held in line within the end 62, and has a square or angular hole 68 in the outer end and extending lengthwise thereof to receive therein the square or angular-shaped pin or shaft 41 on pulley 39, so as to turn said plug with the pulley 39 in operating the tape 42 and the screen 51. The inner end of the plug 67 has an opening therein to receive the end of the connecting rod 72, being preferably attached thereto by means of a pin extending through the plug 67 and the rod 72 so that said rod shall turn with said plug.

The plug 67 has the lug 70 thereon with a hole therethrough to receive one end of the coil tension spring 71 in locking engagement. The opposite end of the coil spring 71 is attached to a ring 74, the end of the spring extending through a hole 75 in said ring 74 and locking on the opposite side. The ring 74 is attached to the inner side of the tubular roll 62 by a screw through the hole 76 in the roll 62 and a threaded opening 77 in the ring 74, which holes are placed at the normal position for the ends of the coil tension springs 71.

The connecting rod 72 extends through the ring 74, revolving freely within the same, and has one-half of a dental clutch or compensation joint 78 on the inner end of the rod 72. The joint 78 is composed of a projecting portion which inserts along side a similarly shaped part on the inner end of the other half of the connecting rod 72, and the projecting parts 79 fill only a portion of the circumference of the circle within the tubular roll 62, hence there is about one-third of a turn or space 80 between the edges on the oppositely placed jaws 79 which permit a partial rotary compensation to either of the half length rods 72 and to the tension spring 71, so that they will adapt themselves to the movement or changes in the tape 42 and the screen fabric 51 with its top cross-bar 50.

A hole 81 is provided in the tubular end plugs 67, and the corresponding holes 82 are provided in the tubular roller 62 in line with the holes 81 to receive a pin 83 therein in locking engagement to hold the tension of the springs 81 until it is desired to release the same after the screen and casing have been properly set up. An opening 84 is provided in the casing 34 through which the pin 83 may be removed from the roller 62 after insertion within the casing 34 and the setting up of the screen parts.

The cross-piece 50 for the upper end of the screen fabric 51 is preferably formed of an angle piece 85 which is bent out of sheet metal with return bends 86 and 87 so as to stiffen and strengthen the edges of the angle strip or piece 85. A second angle strip 88 is provided which fits within the angle beneath projecting portion 86 and the vertical part thereof binds a flat strip 89 against the portion 87 of the strip 85. A rubber or flexible weather strip 90 is provided which fits against the inner edge 91 of the return bend portion 86 in the horizontal weather strip projection shown in Figs. 23 and 25, and against a projecting return bend portion which is an extension of the parts 86 in the vertically supported weather strip shown in Figs. 25 and 26. All the parts are firmly held together by means of binding strips 92 for the horizontal and 93 for the vertical weather strip. The binding strips 92 and 93 are preferably provided with wired edges 94 which greatly strengthen and stiffen said binding strips. The binding strip 92 extends over the return bend edge 86 binding the sheet metal strips 88 and having a return bend edge 95 in the corner beneath the horizontal portion of said strips, thereby holding all the parts firmly together and bracing the entire structure and providing the opening 96 in the end for the attaching strip or pin 49 which thereby

connects the tape 42 to the cross-bar 50. The angle plate 88, strip 89 and angle bar 85 are riveted together to assist in holding the parts firmly together so as to make a rigid cross-bar 50. The ends of the horizontal portion of the cross-bar 50 are notched at 68 and 69 to fit about the side flange 56 as they slide up and down, and curved as hereinafter set forth.

The roller screen is prepared for setting up and shipment by the use of a wrench 97 and a locking plate 98 in order to insure the correct tension of the screen mechanism. The wrench 97 is used to turn the end plug 67 until the proper tension is obtained for the tension spring 71 and the pin 83 is then inserted through the holes 82 and 81, thereby holding the spring 71 at the desired tension. Each of the springs 71 having thus been adjusted and the screen fabric 51 having been attached to the roller 62 by soldering or other suitable means, the screen fabric is then rolled on the roller 62 and the roller and fabric are inserted within the roll case 34. Said roll case and roller and screen fabric are then ready for shipment.

The side cases 32 are prepared for shipment by placing the rollers 37 and 39 in position therewithin and attaching one end of the tape 42 to the guide piece 43 and the other end of the tape 42 to the roller 39. The tape 42 is placed over the roller 37 with the guide piece 43 in the chute 44, the tape extending down from the roller 37 over the guide roller 46 to the lower roller 39. The attaching pins or strips 49 are inserted in the openings 48 before the insertion of the guide strips 43 in the chute 44 and extend out through the slot 58 ready for insertion in the opening 96 in the end of the top cross-bar 50. The cover strip 36 is then attached to the channel strip 35 by screws 53 in the rear side, and the locking plate 98 is inserted through the slot 99 in the lower end of the side case 32 and fits closely onto the square pin 41, thereby holding the tape around the pulley 39 ready to receive the tension from the spring 71. The cross bar 50 is attached to the upper end of the screen fabric 51, preferably before it is attached to and rolled upon the roller 62. The two side cases 32 and the roll case 34 with the screen roller therein are then ready for shipment and it is apparent that these three parts can be placed in exceedingly small compass for shipment as compared with the set-up screen, while all the parts are ready for setting up and adjusting within the window frame 30.

When it is desired to set up the roller screen within the window frame 30, the ends of the roll case 34 are inserted within the hoods 33 of the side cases 32, at the same time inserting the shafts 41 into the openings 68 in the plug 67, which openings the rectangular or square shafts 41 are preferably made to fit. The pins 49 are then inserted in the openings 96 in the ends of the top cross-bar 50, thereby completing the connective circuit of the different parts, including the plugs 67 of the roller 62, the shafts 41, pulleys 39, tapes 42, pulleys 37, channel guide strips 43 and the connecting pins or strips 49 to top cross-bar 50. The locking plates 98 and the pins 83 are then withdrawn, thereby permitting the tension of the springs 71 to pass to the screen 51 through the connecting parts as outlined. The side cases 32 are then attached to the sides of the window casing 30, sufficient adaptation being permitted between the connective parts to insure a perfect and easy fitting. The tension springs 71 hold the tension firmly in the roller 62 and the screen fabric 51 so that the screen fabric may be manually raised or lowered by the cross-bar 50. The compensating joint 78 provides for the unequal stretch of the wire 51 or the tapes 42. The cross-bar 50 usually holds firmly in the horizontal position, but it is obvious that on account of the unequal stretch of the wire 51 or the tapes 42 the cross-bar 50 will get out of the horizontal plane. The ends of the cross-bar 50 are accordingly rounded or curved from top to bottom at each end so that should the cross-bar 50 get out of line it cannot interfere with the channel piece 43.

A locking plate 98 and wrench 97 are provided with each screen so that it may be easily set up or taken down as desired, thereby making a knock-down roll screen construction which is easily adjustable and operable.

I claim as new—

1. A screen of the class described comprising side cases having open lengthwise channels therein on the opposite inner sides of the window casing, said side cases having open ended sidewise housings on their lower ends with a screw hole in the rear side of each of said housings, one of the walls of said lengthwise channels extending down inside of said housings to receive the inner end of a screw, a crosswise roll case insertible into said sidewise housings, said roll case having a slotted opening near each end in the rear wall to receive a screw therethrough and adjustably attach said crosswise roll case within said sidewise housings.

2. A screen of the class described comprising side cases having open lengthwise channels therein on the opposite inner sides of the window casing, said side cases having open ended sidewise housings on their lower ends, a crosswise roll case insertible into said sidewise housings and adjustably attached thereto, a spring roller in said crosswise case, screen fabric attached to said roller at one end to be rolled thereon, a cross

bar attached to the other end of said screen fabric and slidably mounted in said open lengthwise channels, mechanism in said side cases for operating said spring roller screen fabric and cross bar, said top cross bar detachably attached to the operating mechanism in said side cases at each end of said bar.

3. A screen of the class described comprising side cases each consisting of a channel strip and a removable cover therefor providing an open lengthwise channel therebetween, said side cases having a channel or chute therein opposite said open lengthwise channel, a guide piece slidably mounted in said chute, a leaf spring on said guide piece having a sidewise bend to hold said guide piece in line, a pulley revolubly mounted at the top of said side case in line with said chute, a second pulley revolubly mounted near the bottom of said side case, and a tape attached to said guide piece at one end and passing over the top pulley and attached to the bottom pulley to be wound around the same.

4. A screen of the class described comprising side cases each consisting of a channel strip and a cover attachable thereto with a lengthwise channel therebetween for the edge of the screen fabric, an open ended sidewise housing on the lower end of each side case cover, a pulley revolubly mounted on said channel strip opposite said open ended housing and a shaft on said pulley, a second pulley revolubly mounted on said channel strip near its upper end, a tape attached to said lower pulley winding around same and passing over said second pulley, a guide piece attached to the upper end of said tape and slidably mounted in said case opposite said lengthwise channel, a spring to hold said guide piece in line, a connecting pin removably insertible in said guide piece and having a slot in the outer end thereof, a spring roller detachably attached on said shaft on the lower pulley, screen fabric attached to said spring roller, a cross bar on the upper end of said screen fabric, and a screw on said cross bar insertible through the slotted end of said connecting pin to hold the parts together.

5. A screen of the class described comprising side cases having open lengthwise channels therein for the opposite inner sides of the window casing, said side cases having open ended sidewise housings on their lower ends, a crosswise roll case insertible in said sidewise housings, attaching screws in said sidewise housings engaging slotted openings in said crosswise roll case to adjustably connect said parts, a spring roller in said roll case, screen fabric attached to said spring roller at one end and slidably engaging in said open lengthwise channels on the opposite inner sides of the window casing, a cross bar attached to the other end of the screen fabric, operating mechanism in said side cases for said spring roller and screen fabric and said top cross bar to roll and unroll said screen fabric upon said spring roller, and screws in said top cross bar engaging said operating mechanism with adjustable compensation between said parts to permit adjustment of said top cross bar to said operating mechanism.

6. A screen of the class described comprising side cases having open lengthwise channels therein and a crosswise roll case connecting said side cases at their lower ends, a spring roller in said roll case, screen fabric attached to said spring roller at one end and to a top cross bar at the other end, operating mechanism in said side cases, said top cross bar connected with said operating mechanism in said side cases to operate said spring roller by raising or lowering said top cross bar, and the ends of said top cross bar vertically curved to prevent interference with said operating mechanism.

7. In a screen of the class described a casing comprising side cases having open lengthwise channels therein and a crosswise roll case connecting said side cases at their lower ends, a spring roller in said roll case, screen fabric attached to said spring roller at one end and to a top cross bar at the other end, operating mechanism in said side cases for said roller and screen, said top cross bar consisting of two angular plates fitting against one another, return bends in the lengthwise edges of one of said plates and a sidewise bend lengthwise of the other of said angular plates, a lengthwise binding strip fitting close over said bends in said angular strips to hold the same together, a flexible weather strip bound upon said angular strips by said binding strip, the ends of said top cross bar curved vertically to prevent binding on said side cases or operating mechanism when out of the horizontal plane.

In testimony whereof I have affixed my signature in the presence of two witnesses.

WILLIAM W. WATSON.

Witnesses:
HAROLD FORSBERG,
G. M. ROSE.

Copies of this patent may be obtained for five cents each, by addressing the "Commissioner of Patents, Washington, D. C."