(12) INTERNATIONAL APPLICATION PUBLISHED UNDER THE PATENT COOPERATION TREATY (PCT)

(19) World Intellectual Property Organization
International Bureau

(43) International Publication Date
27 March 2014 (27.03.2014)

WIPO | PCT

(10) International Publication Number
WO 2014/047547 A1

(51) International Patent Classification:
H01R 12/71 (2011.01)

(21) International Application Number:
PCT/US2013/061160

(22) International Filing Date:
23 September 2013 (23.09.2013)

(25) Filing Language: English

(26) Publication Language: English

(30) Priority Data:
61/704,216 21 September 2012 (21.09.2012) US

(71) Applicant: **MOLEX INCORPORATED** [US/US]; 2222 Wellington Court, Lisle, Illinois 60532 (US).

(72) Inventor; and
(71) Applicant : **LIN, Jengde** [—/US]; c/o Molex Incorporated, 2222 Wellington Court, Lisle, Illinois 60532 (US).

(74) Agent: **SHELDON, Stephen L.**; Molex Incorporated, 2222 Wellington Court, Lisle, Illinois 60532 (US).

(81) Designated States *(unless otherwise indicated, for every kind of national protection available)*: AE, AG, AL, AM, AO, AT, AU, AZ, BA, BB, BG, BH, BN, BR, BW, BY, BZ, CA, CH, CL, CN, CO, CR, CU, CZ, DE, DK, DM, DO, DZ, EC, EE, EG, ES, FI, GB, GD, GE, GH, GM, GT, HN, HR, HU, ID, IL, IN, IS, JP, KE, KG, KN, KP, KR, KZ, LA, LC, LK, LR, LS, LT, LU, LY, MA, MD, ME, MG, MK, MN, MW, MX, MY, MZ, NA, NG, NI, NO, NZ, OM, PA, PE, PG, PH, PL, PT, QA, RO, RS, RU, RW, SA, SC, SD, SE, SG, SK, SL, SM, ST, SV, SY, TH, TJ, TM, TN, TR, TT, TZ, UA, UG, US, UZ, VC, VN, ZA, ZM, ZW.

(84) Designated States *(unless otherwise indicated, for every kind of regional protection available)*: ARIPO (BW, GH, GM, KE, LR, LS, MW, MZ, NA, RW, SD, SL, SZ, TZ, UG, ZM, ZW), Eurasian (AM, AZ, BY, KG, KZ, RU, TJ, TM), European (AL, AT, BE, BG, CH, CY, CZ, DE, DK, EE, ES, FI, FR, GB, GR, HR, HU, IE, IS, IT, LT, LU, LV, MC, MK, MT, NL, NO, PL, PT, RO, RS, SE, SI, SK, SM, TR), OAPI (BF, BJ, CF, CG, CI, CM, GA, GN, GQ, GW, KM, ML, MR, NE, SN, TD, TG).

Published:

— *with international search report (Art. 21(3))*

— *before the expiration of the time limit for amending the claims and to be republished in the event of receipt of amendments (Rule 48.2(h))*

(54) **Title**: FLOATING LOW PROFILE MODULAR ELECTRICAL CONNECTOR SYSTEM

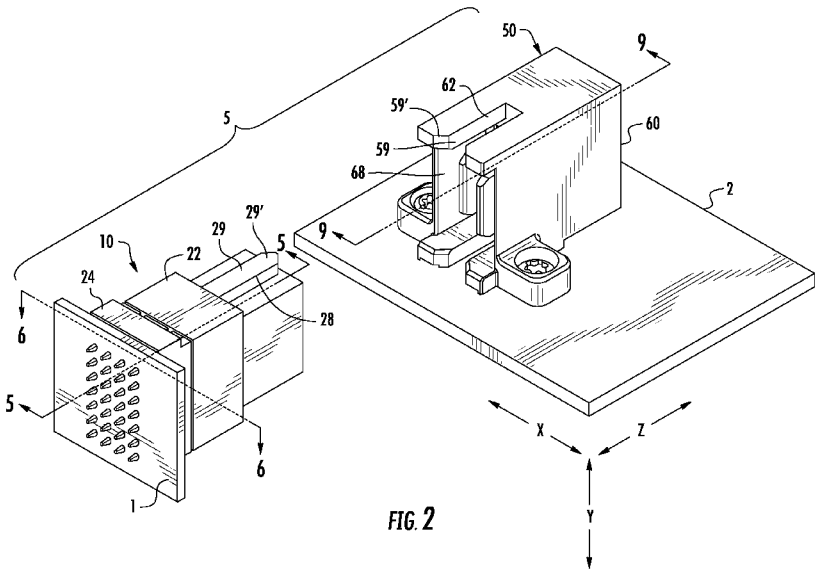

FIG. 2

(57) **Abstract**: A connector system includes a first connector and a second connector used for the transmission of electrical power and signal. The connector system includes a two-piece housing design and extended wiping between mating connector terminals to compensate for variable misalignment in three mutually perpendicular directions. Additionally the housings of the first and second connectors are provided with guiding features to facilitate proper alignment prior to connector mating.

WO 2014/047547 A1

FLOATING LOW PROFILE MODULAR ELECTRICAL CONNECTOR SYSTEM

RELATED APPLICATIONS

[0001] This application claims priority to United States Provisional Application No. 61/704,216, filed September 21, 2012 which is incorporated herein by reference in its entirety.

FIELD OF THE INVENTION

[0002] The present invention generally relates to electrical power connectors that are useful as low-profile board-to-board connectors and wire-to-board connectors and provides excellent operation under high current density conditions and are particularly suitable for use as modular components within modular assemblies such as blade servers used in telecommunications and data networks. In particular, power connectors that can accommodate a specific amount of misalignment and between the various modular components which are commonly known as floating type connectors.

DESCRIPTION OF RELATED ART

[0003] As is known, electric connectors have been widely used to provide power from one circuit board to another circuit board. Due to positional tolerance issues that can result from such a union, is it know to compensate for this tolerance by using a floating-type connector. Generally speaking, a floating type connector comprises a stationary housing which can be fixed to a printed circuit board and a separate movable housing which is capable of moving with respect to the stationary housing, and a plurality of terminals that are supported by both the movable and stationary housing. The terminals are attached to the housings at regular intervals, and are to be mated with a plurality of terminals of a mating electric connector, which is fixed to another printed circuit board or similar device. Even if one printed circuit board is somewhat deviated from its prescribed position relative to the other printed circuit board, the movable connector housing can be brought to such a position that the positional deviation may be absorbed, thus permitting the mating of the male and female terminals for stable connection.

[0004] To assure that the movable housing can move with respect to the stationary housing of the floating type electric connector, a movable joint is used to connect the movable housing to the stationary housing. A conventional floating type electric connector is made by forming a movable housing and a stationary housing separately, and by attaching a movable joint to these separate housings.

[0005] With power connectors, high current is often required and the ability to carry this current dictates that relatively large conduction blades or terminals are required. With this type of geometry, certain blades may be able to flex in a first direction but due to the blades cross section, typically cannot flex in a second direction. Thus floating connector systems are suited to float. Certain individuals would therefore appreciate further improvements to power connectors.

BRIEF SUMMARY

[0006] In an embodiment, a connector system includes a first connector and a second connector. The first connector includes a first housing and a second housing with a power contact terminal supported in the first and second housing. The second housing can translate relative to the first housing. The second connector includes a third housing. The first and second connectors are configured to mate with each other in a manner that can accommodate positional variance in an X and Y and Z direction. For example, translation between the first and second housing can provide positional variance in the X direction. In an embodiment, a protrusion on the second housing engages a slot in the third housing and is configured to provide some Y directional variance. In addition, mating terminals supported by the first and second connectors are configured to provide a predetermined amount of over-travel so that the connector system can accommodate positional variance in a Z direction.

BRIEF DESCRIPTION OF THE DRAWINGS

[0007] The present invention is illustrated by way of example and not limited in the accompanying figures in which like reference numerals indicate similar elements and in which:

[0008] FIG. 1 is a perspective view of an embodiment of a connector system.

[0009] FIG. 2 is a perspective view of the connector system depicted in FIG. 1 with the plug connector separated from the first connector.

[0010] FIG. 3 is an exploded perspective view of an embodiment of a first connector.

[0011] FIG. 4 is a perspective view of the female terminal of the first connector of FIG. 3.

[0012] FIG. 5 is a cross sectional view of the first connector shown in FIG. 2.

[0013] FIG. 6 is a cross sectional view of the first connector shown in FIG. 2.

[0014] FIG. 7 is an exploded view of an embodiment of a plug connector.

[0015] FIG. 8 is a perspective view of the male terminal of the plug connector depicted in FIG. 7.

[0016] FIG. 9 is a cross sectional view of the plug connector shown in FIG. 2.

[0017] FIG. 10 is an exploded rear perspective view of an embodiment of a plug connector.

[0018] FIG. 11 is a top cross sectional view of an embodiment of a mated connector system when the plug and receptacle are misaligned.

[0019] FIG. 12 is a side cross sectional view of an embodiment of a mated connector system.

[0020] FIG. 13 is a side cross sectional view of an embodiment of a mated connector system when the plug and connector are misaligned.

[0021] FIG. 14 is a top cross sectional view of an embodiment of a mated connector system.

[0022] FIG. 15 is an exploded view of an alternative embodiment of a connector system.

[0023] FIG. 16 is a partially exploded view of the plug connector depicted in FIG. 15.

[0024] FIG. 17 is a partially explode view of another embodiment of a plug connector.

DETAILED DESCRIPTION

[0025] The detailed description that follows describes exemplary embodiments and is not intended to be limited to the expressly disclosed combinations. Therefore, unless otherwise noted, features disclosed herein may be combined to form additional variations that were not otherwise shown for purposes of brevity.

[0026] As can be appreciated, the detailed description provided herein illustrates an improved power connector system that has the ability to compensate for misalignment between connected devices by providing a connector structure with housings that can shift relative to each other while still providing stable electrical connection.

[0027] While the preferred embodiment of the invention have been shown and described, it will be apparent to those skilled in the art that changes and modifications may be made therein without departing from the spirit of the invention, the scope of which is defined by the appended claims. Like members are designated by like reference characters. In the following description, directions are arbitrarily defined, in an embodiment an "X" direction can be a horizontal direction, a "Y" direction can be in a vertical direction and a "Z" direction can be along a mating axis of the connector system. In other words, X, Y and Z can be three axes of a standard 3-dimensional coordinate system.

[0028] FIG. 1 illustrates an application in which power connectors 10, 50, 10', 50' are used in which may include a pair of printed circuit boards 1, 2, 2' that are to be connected together. As can be appreciated, one application consist of several circuit boards connected to a main base board or motherboard 1 and also connected to another electrical device such as blade servers, routers and the like. With the increased number of devices it is beneficial that the tolerances between individual power connectors be held to within certain limits. Failing to prevent tolerances build up can lead to connectors that are not properly aligned and may result in unmated connectors, which could lead to failed equipment.

[0029] As can be appreciated from FIG. 2, a floating type connector system 5 is illustrated. The connector system 5 is suitable for use as power connector (e.g., current delivery). The connector system 5 includes a first connector 10 (in the form of a receptacle connector) that is attached to printed circuit board 1 and a second connector 50 (in the form of a plug connector) attached to a second printed circuit board 2. The first connector 10

includes a housing assembly 20 with a first connector 24 and a second connector 22, the housing assembly having a plurality of terminals 30 retained within the housing assembly 20. The second connector 50 is configured to mate with the first connector 10 and includes a third housing 60 that supports a plurality of terminals 70, the terminals 30 configured to mate with the terminals 70.

[0030] It can be appreciated that within the present disclosure that the connector system is referenced within a three dimensional coordinate system. As shown in FIG. 2, three mutually perpendicular or orthogonal directions are defined, a first direction along a first axis, which can be referred to as an "X" direction along a width of the connectors (e.g., in a side to side orientation), a second direction along a second axis, which can be referred to as a "Y" direction along a height of the connectors (e.g., an up and down orientation) and a third direction along a third axis, which can be referred to as a "Z" direction along the mating axis or mating direction of the connectors (e.g., a forward-backward orientation). The three axes define a three-dimensional coordinate system.

[0031] As shown on FIGS. 3-5 the first connector 10 includes the housing assembly 20 that includes the first housing 24 and the second housing 22. The first housing 24 can be molded from an insulative material and includes a plurality of molded cavities that receive the mounting portion 34 of each terminal 30. The second housing 22 can be similarly molded from an insulative material and includes a corresponding cavity that receives the contacting portion of each respective terminal 30. The second housing 22 also includes a protrusion 28 that is received in a slot 62 on the third housing 60. While certain embodiments may use a single protrusion 28, the depicted embodiment includes two protrusions 28 provided on opposite sides of the second housing 22 (although in the figures the perspective view makes it impossible to see both protrusions in the same figure). Naturally, the third housing 60 can be configured to accommodate the number of included protrusions in the second housing 22.

[0032] The terminal 30 can be stamped and formed from an electrically conductive material such a copper or a copper based alloy. The terminal 30 includes a body portion 32, a mounting portion 34 extending from a first end of the body portion 32 and a mating portion 36 extending from a second end of the mounting portion 32. The mounting portion 34 of the female terminal 30 has a plurality of tails 33 extending that are configured to engage a the first circuit board 1. As depicted, the tails 33 are configured for a press-fit style friction

engagement with a conductive hole 3 of circuit board 1 but the tails can also be arranged in other beneficial configurations such as through-hole or SMT and can be soldered or welded or otherwise connected to the circuit board as desired. The mating portion 36 includes fingers 38 that extend to contacts 38a.

[0033] As illustrated in FIG. 5 the cavity of the first housing 24 has a first terminal receiving section 40 that receives the mounting section 34 of the female terminal 30 and a second terminal receiving section 42 that allows the body portion 32 and the mating portion 36 of the female terminal 30 to pass through. The mounting portion 34 of the female terminal 30 includes a first projection 35 on each side of the mounting portion 34 that is received in the first receiving section 40. A barb 35a is formed in each projection 35 and extends away in a normal direction from the projection 35 formed on the female terminal mounting portion 34. Upon insertion of the female terminal 30 into the first housing 24, the barb 35a formed on each projection 35, digs into the insulative material of each pocket 41 of the first housing 24 and retains and secures the female terminal 30 to the first housing 24. As can be appreciated, the first housing 24 has a first terminal section 40 with a surface 41 that receives and engages a first projection 35 of the mounting section 34. As depicted, the first projection 35 may include a barb 35a that helps ensure the first terminal section 40 securely and fixably retains the terminal 30. The first housing further includes a second terminal section 42 that allows the mating portion 36 to pass through. The mating portion 36 includes a second projection 37 that engages a third terminal section 43 of the second housing 22. The second projection 37 can include a barb 37a to help ensure the mating portion 36 is securely and fixably held by the second housing 22. The spring fingers 38 extend into contact receiving portions 48 provided in the housing 22.

[0034] As can be appreciated, the second housing 22 includes a protrusion 28 that aligns the second housing 22 with a cooperating slot 62 on the third housing 60 when the first connector 10 and the second connector 50 are connected together.

[0035] As previously described, each female terminal 30 includes a plurality of fingers 38 extending from the mating portion and are configured to engage the terminals 70 of a second connector 50. The contact 38a is formed at the distal end of each finger 38 for electrical contact with the corresponding terminal 70. As depicted there are a total of 5 fingers but some other number could be used if desired. The plurality of fingers 38 helps insure that a

reliable electrical connection occurs between the terminal 30 and terminal 70 by providing multiple points of electrical contact.

[0036] To complete the assembly of the first connector 10, the terminal 30 that was inserted into the first housing 24 are then inserted in to the second housing 22. Each of the second projections 37 engages the third terminal section 43 as the terminal 30 and first housing 24 is inserted and fitted to the second housing 22.

[0037] As shown in the sectional view of FIG. 6, housing 24 has a pair of shoulders 25 extending into the second housing 22 adjacent the exterior walls 26 of the second housing 22. A distance "D" exists between each shoulder 25 and each respective side wall 26 of the second housing 22. In operation, due to the terminal 30 being secured to the housing 24 near the bottom or mounting portion 34 of the terminal 30 by first projections 35 and the mating portion 36 of the terminal 30 being secured to the second housing 22 by second projections 37; and the relative length of the body portion 32 of the terminal 30, the terminal 30 can resiliently bend or deflect laterally along the length of the terminal 30 in a "X" direction provided by a distance "D". The distance "D" allows the second housing 22 to shift or float a total distance of 2 times "D" in a direction perpendicular to the mating axis Z of the connector system 10 or along a width of the connector in the "X" direction. Thus, the end of the terminal can be shifted along the X direction a distance of "D1."

[0038] FIG 7 shows the construction of the second connector 50 that includes the third housing 60 formed from an insulative material and is typically injection molded including cavities or passages therein for receiving a plurality of electrically conductive male terminals 70. The second connector 50 includes an opening 62 formed at the front of the third housing 60 for receiving a nose 18 of the first connector 10. As depicted, the terminal 70 is stamped and formed in the general shape of a flat blade and can be formed from an electrically conductive material such as copper or copper based alloy or such other conductive alloy/metal.

[0039] As illustrated in FIG. 8 the terminal 70 includes a main body portion 72 with a contacting portion 74 extending from a first side of the body portion 72 and a mounting portion 76 extending from a second side of the body portion 72. As depicted the main body portion 72 is planar in nature but other configurations could be used if desired. The contacting portion 74 of the male terminal 70 has a contacting surface 75 that is offset with

respect to the body portion 72 of the male terminal 70. Thus, as depicted, two oppositely configured terminals 70 can be positioned adjacent each other so that the contacting portions 74 are closer together (and can even be in contact) compared to the main body portions 72. The mounting portion 76 is configured to mount to a circuit board and can include a plurality of tails that are formed in a manner similar to the tails 33 discussed above with respect to terminal 30. In an embodiment, the mounting portion 76 extends from an adjacent side of the body portion 72 with respect to the mating portion 74 (such an arrangement being typical of a right-angle connector). In an alternative vertical arrangement (not shown), the mounting portion 76 would extend from an opposing side of the body portion 72 compared to the contact portion.

[0040] In certain power applications, connectors capable of carrying high current are generally desired so terminals with larger blades are helpful. In such a configuration, which is shown in FIG. 8, each terminal pair 70' is comprised of two individual blade terminals 70 arranged in a back to back orientation – if desired the individual blade terminals 70 can be mirror images of each other. Alternatively, each side can be unique to make assembly easier to verify. As can be appreciated, the off-set between the body portions 72 of each blade terminal 70 can be used to allow more space between adjacent holes 4 on the corresponding circuit board 1. In certain circumstances that helps ensure that when the blade terminals 70 are soldered to the circuit board 1 there is no solder bridging between the terminals 70.

[0041] As illustrated in FIGS. 8-10, each terminal 70 includes a barb 73 and a locating tab 77 formed in the body portion 72 of the male terminal 70. The barbs 73 can be sheared and bent inward toward the intervening space between the terminal pair 70' and is intended to allow the terminals to securely engage the third housing 60. The locating tabs 77 can be sheared in the main body portion 72 and extend in an outwardly direction opposite to the direction of the barbs 73, that is, the barbs 73 extend toward the other terminal 70 of the terminal pair 70' and the locating tabs 77 in an opposite direction away from the other terminal 70 of the terminal pair 70'. As illustrated in FIGS. 9 and 10 each individual blade terminal 70 is paired with its respective mirrored blade terminal 70 and inserted into the respective cavities of the second connector 50. In an embodiment, the second connector 50 is mounted to a printed circuit board 2 so that the male terminal pins 78 extend at right angles to the contact portion 74 of the circuit board 2. In an alternative configuration, the contact portions 74 directly extend upward and are in line with the terminal pins 78 and a mating

circuit board typical of a vertical arrangement. As can be appreciated, the third housing 60 can include a board mounting portion 79 on each side of the third housing 60 so that the third housing can be fastened to a supporting circuit board with a fastener 80 (which can be a pair of screws or bolts)third housing.

[0042] Referring to FIGS. 9 and 10, the third housing 60 has an opening 68 in the mating end for receiving the nose 18 and the opening 68 communicates with a pair terminal cavities extending rearward to the rear of the third housing 60. A slot 62 is positioned on the exterior of the third housing 60 for cooperatively engaging the rib 28 to properly position the second connector 50 to the first connector 10 when they are mated together. A plurality of elongated slots 64 are formed in the in the rear of the third housing 60 extending vertically. A central opening 63 connects the mating opening 68 and the elongated slots 64. The central opening 63 allows the blade portions 75 of the terminal pair 70' to protrude into the mating opening 68 while being inserted into the third housing 60 from the rear of the third housing 60.

[0043] The terminal pair 70', when arranged in the illustrated back-to-back relationship, has the barbs 73 on each male terminal 70 directed toward each other and the shear form or locating tab 77 are directed in the opposite direction and positioned on the opposite side of the terminal pair 70'. A first locating rib 65 is formed in the cavity of the third housing 60 and protrudes in a direction as to contact the main body portion of the male terminal 70 with a second locating rib 65 located on the opposite of the cavity and facing the corresponding terminal 70 of the terminal pair 70'. It should be noted that the terminals 70 that form the terminal pair 70' are shown with two different styles of tails, and while such a construction is possible, it is expected that it will be more desirable in most situations to have the terminals that make the terminal pair 70' to only have a single type of tail (e.g., all through-hole or all press-fit, etc.). As can be appreciated, however, the type of tail is not intended to be limiting unless otherwise noted.

[0044] During the installation of the terminal pair 70', each terminal contacting surface or blade portion 75 is inserted into the cavity from the rear of the third housing 60 and is aligned with the pass through opening. As the terminal pair 70' is further inserted, the blade surfaces 75 extend into the mating opening 68 in the front of the third housing 60 and the locating tab 77 rides along the locating rib 65 biasing the terminal pair 70' upwardly and positioning the terminal pair 70' in the housing 60. The third housing 60 further includes a strip 69 formed

between the body portions 72 of the terminal pair 70'. Once the terminal pair 70' is inserted in to the cavity and the locating tab 77 engages the locating rib 65, the barbs 75 on each of the male terminals 70 engage the insulative strip 69 and skive into the surface of the strip 69. Once the terminal pair 70' is fully inserted into the cavity the barbs 75 dig into the insulative wall and retain the terminal pair 70' within the cavity of the third housing 60.

[0045] Next the process of connecting the first connector 10 and second connector 50 together will be described in detail so as to illustrate the floating aspect of the connector system 5. As described and depicted in the Figures, the nose 18, when the first and second connectors are mated, is positioned in the opening 68. The second housing 22 and the third housing 60 are aligned using the protrusion 28 and the slot 62. The protrusion 28 has a lead-in portion 29 on the front end of the protrusion 28 and the slot 62 formed in the third housing 60 each have a corresponding lead-in portion 59 on the respective front sections of the slot 62 and the protrusion 28. Each respective lead-in portion 29, 59 has an angled surface 29', 59' on each lateral side of the guiding rib 28 and locating slot 62, wherein each corresponding angled portion 29', 59' on the protrusion 28 and the slot 62, when added together has a width that is greater than the distance "D1" between the first housing 24 and the second housing 22 of the first connector 10. Consequently, any misalignment between the second connector 50 and first connector 10 can be compensated for by the lead-in features 29, 59 of the protrusion 28 and the slot 62.

[0046] As shown in FIG. 11, during the mating of the second connector 50 and first connector 10 the cooperating lead-in structures 29, 59 of the protrusion 28 and the slot 62 align the second connector 50 and first connector 10 for proper engagement, in this case, the second housing 22 of the first connector 10 translates with respect to the first housing 24 in the amount of plus or minus "D1" along the length of the connector system 5 or in the "X" direction as described above. As shown in FIG 11 the first housing 24 remains fixed and the second housing 22 shifts or floats to align with the opening 68 formed in the front of the housing 60 of the second connector 50 wherein the terminals 30 bend and flex in the body portion 32 to compensate for the misalignment between the second connector 50 and the first connector 10. This floating or self-aligning in the "X" direction or along the length of the connector system 5 is contained entirely within the first connector 10.

[0047] In addition to misalignment in the "X" direction, cumulative tolerance buildup can also affect the alignment between the second connector 50 and first connector 10 in a vertical direction or "Y" direction. As shown in FIG 12 the second connector 50 and first connector 10 are in a state of engagement in which the nose 18 has entered the opening 68 a second distance "D2"exists between an outer surface 21 of the nose 18 and an inner surface 66 of the opening 68. The second distance "D2" can be provided between both the upper inner surface and lower inner surface of the third housing 60 and the respective upper and lower sides of the nose 18. Each space defines a second distance "D2"with a cumulative distance of "2 times D2" or plus or minus "D2". This allows the second connector 50 to shift or float plus or minus "D2" in a vertical or "Y" direction with respect to the first connector 10. As shown in FIG, 12, however, the second connector 50 and the first connector 10 are in a non-shifted position, that is the second connector 50 and the first connector 10 are in a neutral the vertical alignment. In this case all 5 of the contact portions or cantilevered spring fingers 38 of the female terminal 30 are in total or complete electrical contact with the blade portion 75 of the male terminal 70.

[0048] In a condition where the second connector 50 and first connector 10 are not aligned, as shown in FIG 13 the second connector 50 is shifted downward, in this case in the minus "Y" direction a total distance of "D2" with the outer surface 21 of the nose 18 in close contact with the inner surface 66 in the opening 68 of the third housing 60. To provide a desired efficient electrical connection, the contact 38a preferably should remain in contact with the blade portions 75. As shown in FIG 13, when the second connector 50 or first connector 10 is in the extreme shifted state of either plus or minus "D2", the respective contacts 38a remains in at least partial contact with the blade portion 75, therefore maintaining the proper electrical engagement. In the depicted embodiment, for example, at least half of the width of each contact 38a remains in contact with the blade portion 75.

[0049] Further misalignment can be introduced in to the connector system 5 by tolerance buildup along the mating axis or the "Z" direction. To compensate for this tolerance, the connector system provides for a certain amount of over-travel in the Z direction. This is accomplished by providing a male and female terminal system 70, 30 with a specific amount of wiping action. The wiping or over-travel in this case is defined as the distance the electrical contacting point of the first terminal 70 and second terminal 30 travel past each other after initial electrical contact to the point when the second connector 50 and first

connector 10 are fully mated or engaged. In other words, during mating of the terminals 30, 70, the initial electrical contact is made once the male blade portion 75 contacts the contacts 38a and the final point of contact occurs when the first connector 10 and the second connector 50 are at the end of the mating stroke. The distance between these two points of contact is the wipe or over-travel.

[0050] The over-travel or wiping is shown in FIG 14 and is defined by the amount of misalignment the connector system 5 can tolerate in the "Z" direction. In practice, the neutral state or the condition in which the first connector 10 and the second connector 50 are perfectly aligned, the electrical engagement point is targeted to be at the midpoint of the blade portion or contacting surface 75 of the male terminal 70. The over-travel or wiping is characterized as "D3" with a total accommodation of misalignment of 2 times "D3" in the "Z" direction.

[0051] In total, when multiple connectors are arranged in an array type setting as shown in FIG. 1, the buildup of tolerance due to positioning between connectors on a board and equipment that is being connected together can lead to connectors not being aligned and failure of the equipment to be properly assembled. The ability of a connector system, as described above to align or float to accommodate this misalignment in three mutually perpendicular or orthogonal directions aids in the assembly of this equipment and helps ensure that proper electrical contact is made between the electrical systems of the respective equipment.

[0052] As previously illustrated, the two piece construction is shown as a female first connector 10. In another embodiment, the connector system 5' comprises a first connector 110 and a second connector 150 such as shown in FIGS. 15 and 16 and the same two-piece housing construction is utilized for the second connector 150. In this embodiment, the need for greater flexibility of the elongated or flexing terminal may be required occurs in certain applications that require tighter space requirements. In these circumstances the main body portion 172 of the flexing terminal 170 has a reduced cross-section. The reduced cross-section can be formed by purchasing material that is preformed or by performing a secondary forming operation, whichever is preferred and more cost effective. Such a construction allows the contacting portion 174 and mounting portion 176 to have a greater cross-section to

maintain the necessary normal force for efficient electrical contact while providing a resilient middle portion for increased flexibility and bending.

[0053] As illustrated in FIG. 15 – 17, alternative embodiments are contemplated. In one instance, the second connector 150 includes a first terminal holder 164 having a pair of cavities to retain the mounting portion 176 of the male blade terminal 170 and a second terminal holder 162 to retain the contact portions 174 of the male blade terminal 170. The male terminal pair 170' is retained in a similar manner as previously described in the preferred embodiment. The mating blade portions 175 of each male terminal pair 170' are pressed into the second terminal holder 162 and the mounting portion 176 of each male terminal pair 170' is pressed into the first terminal holder 164 with the reduced cross-section positioned between the second and first terminal holders 164, 162. The terminals 170' and the second and first holders 164, 162 are then inserted into a metal shell or outer shell 168. The first terminal holder 162 is fixably retained to the outer shell 168 by cooperating stop shoulders 158, 158' and cooperating spring arms 156, 156'. The second terminal holder 164 is slidably received in the outer shell 168, in other words, the second terminal holder has a width that it shorter than the interior width of the outer shell 168 and a height that is the same of the interior height of the outer shell 168. This construction allows the second terminal holder 164 to shift in a side to side direction or a plus or minus "X" direction and compensate for misalignment in this direction.

[0054] To compensate for misalignment in the vertical direction or "Y" direction, the first connector 110 includes a front protrusion/nose 118 formed on a housing 144 that extends into an opening 146 in the front of the second connector 150 upon mating. The height of the protrusion/nose 118 formed on the receptacle housing 144 is less than the internal height of the opening 146 formed on the outer holder 168 when engaged. The difference between the height of the protrusion 118 on the housing 144 on the first connector 110 and the opening 146 in the outer shell 168 of the second connector 150 is equivalent to the amount of shift or float in the "Y" direction.

[0055] [0049] In these embodiments, the opening 146, 246 is formed at the front end of the second connector 150, 250 for receiving a corresponding mating portion 118 of a first connector 110. Corresponding to the front opening 146, 246 of the second connector 150, 250, a flange 270 is generally bent outwardly forming a funnel around the periphery of the

outer shell 168. The funnel is used to guide the front shroud of the mating receptacle to properly align the second connector 150, 250 and first connector 10, 110 during mating. The length of each flange 270 is bent outwardly and must be greater than the respective of amount of float in the "X" and "Y" directions so that the second connector 150, 250 and first connector 10, 110 can be mated together when there the second connector 150, 250 and first connector 10, 110 are not aligned due to tolerance buildup.

[0056] In another alternative embodiment, as shown in FIG 17 a second connector 250 has a housing comprising an outer shell 268 stamped and formed from a thin gauge metal, typically sheet metal, and a terminal holder. The use of sheet metal allows for thinner wall sections and therefore minimizes the over height and width of the second connector 250. In this embodiment the terminal holder or housing 260 is formed from an insulative material have two paired male terminal blades 270' inserted into respective cavities in the same manner as described in the preferred embodiment. The terminals can alternatively be insert-molded to create a terminal module thus eliminating the need for pressing or stitching the terminals to the housing. This embodiment also has a funnel arrangement 270 on the mating opening of the outer stamped housing to properly align the plug connector and receptacle connector to compensate to the misalignment due to tolerance buildup within the connection system 5.

[0057] Of course, it is contemplated that that one or more of the directions of misalignment can be accommodated. In certain instances it may be only required that self-alignment only needs to be corrected in one direction or some combination of directions. In this respect, the remaining aligning or float features need not occur and the connector system functions as a typical direct connecting system.

[0058] The disclosure provided herein describes features in terms of preferred and exemplary embodiments thereof. Numerous other embodiments, modifications and variations within the scope and spirit of the appended claims will occur to persons of ordinary skill in the art from a review of this disclosure.

We claim:

1. A connector system comprising:

a first connector, the first connector having a first housing and a second housing, the first connector including a terminal with a first projection fixably attached to the first housing and a second projection being fixably attached to the second housing, wherein the second housing is movable with respect to the first housing in a first direction and the second housing includes a nose and a protrusion; and

a second connector mated to the first connector, the second connector having a third housing and a second terminal fixably retained in the third housing, the third housing having a slot that is larger than the protrusion in both a second direction, wherein the opening receives the nose and the connector system is configured to allow for movement between the first connector and the second connector in the first, second and third directions, wherein the first direction is along a first axis, the second direction is along a second axis and the third direction is along a third axis corresponding to a mating direction, the three axes defining a three-dimensional coordinate system.

2. The connector system of claim 1, wherein the protrusion is a first protrusion formed on a first side of the second housing, the second housing further including a second protrusion formed on a second side of the second housing, the third housing configured to accommodate both protrusions.

3. The connector system of claim 2, wherein the slot and the protrusion have corresponding lead in portions formed on the front sections of each respective slot and protrusion.

4. The connector system of claim 1, wherein the terminal of the second connector includes a pair of individual blade terminals arranged such that each individual blade terminal is a mirror image of the other.

5. The connector system of claim 4, wherein the individual blade terminals each have a mounting portion and a contacting portion with the mounting portion offset from the contacting portion.

6. A connector comprising:

a first housing having a terminal receiving portion formed in the housing and a first pocket;

a second housing having a terminal receiving portion formed in the housing and a second pocket;

a terminal including a body portion, a mounting portion including a first projection extending from a first side of the body portion and being retained in the first pocket, and a contacting portion including a second projection extending from a second side of the body portion and being retained in the second pocket; and

the body portion having a first material thickness, the mounting portion having a second material thickness and the contacting portion having a third material thickness wherein the material thickness of the body portion is less than the material thickness of the mounting portion and the contacting portion.

7. The connector of claim 6, wherein the first housing and the second housing are configured to allow for movement between the first housing and the second housing.

8. The connector of claim7, wherein the connector has an outer shell for fixably retaining the first housing and slidably received the second housing.

9. The connector of claim 8, wherein the outer shell is formed from a thin gauge metal.

10. The connector of claim 9, wherein the outer shell has a flange formed outwardly around the periphery of a front opening of the outer shell.

11. The connector of claim 6, wherein the mounting portion and the contacting portion of the terminal have the same material thickness.

12. A connector system comprising:

a first connector, the first connector having a first housing and a second housing, a terminal with a mounting portion retained in the first housing and a contacting

portion retained in the second housing, and an outer shell, with the first housing fiaxably attached to the outer shell and the second housing being slidably received in the shell and movable with respect to the first housing in a first direction, the outer shell includes an opening;

a second connector connected to the first connector, the second connector having a third housing and a second terminal retained in the third housing, and the third housing having a protrusion, the opening in the outer shell of the first connector is larger than the protrusion of the second connector in both a second direction and a third direction wherein the opening receives the protrusion; and

wherein the connector system is configured to allow movement between the first connector and the second connector in the first, second and third directions, wherein the first direction is along a first axis, the second direction is along a second axis and the third direction is along a third axis, the three axes defining a three-dimensional coordinate system.

13. The connector system of claim 12, wherein the outer shell is formed from a thin gauge metal.

14. The connector system of claim 13, wherein the outer shell has a flange outwardly formed at a front end of the outer shell in the shape of a funnel.

15. The connector system of claim 12, wherein the terminal of the second connector includes a pair of individual blade terminals arranged in a pair with each individual blade terminal being mirror images of each other.

16. The connector system of claim 15, wherein the individual blade terminals each have a mounting portion and a contacting portion with the mounting portion offset from the contacting portion.

17. The connector system of claim 12, wherein the terminal of the first connector includes a body portion extending between the mounting portion and the contacting portion with the mounting portion having a first material thickness and the contacting portion having a second material thickness and the body portion having a third material thickness, wherein

the material thickness of the body portion is less than the material thickness of the mounting portion and the contacting portion.

18. The connector system of claim 17, wherein the mounting portion and the contacting portion of the terminal have the same material thickness.

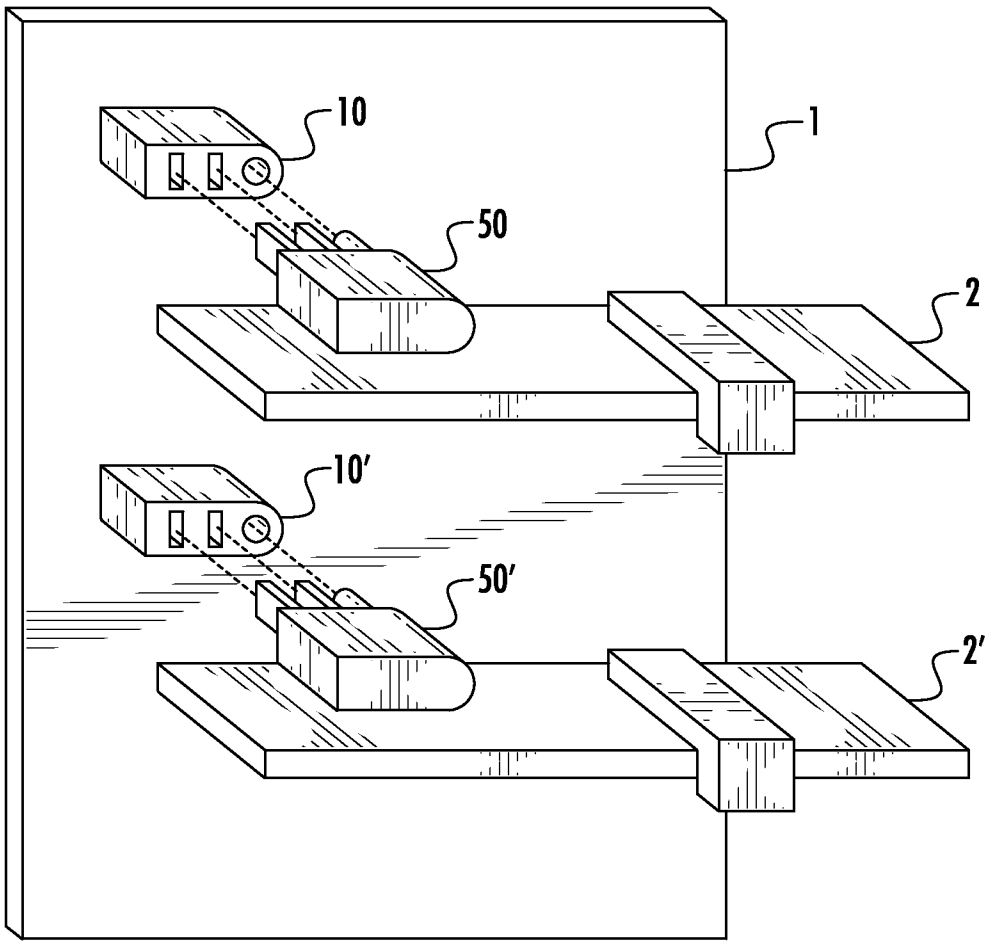

FIG. 1

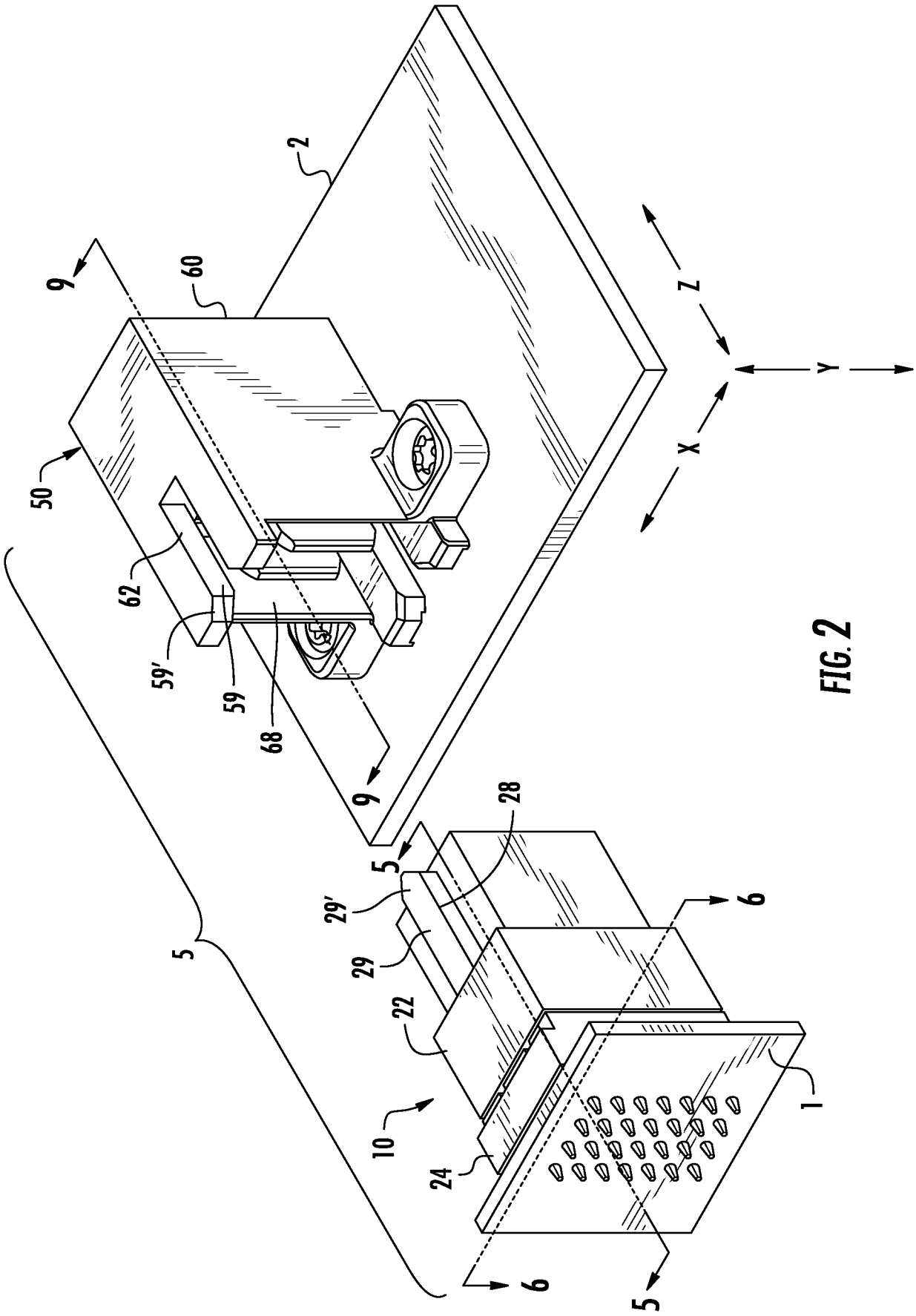

FIG. 2

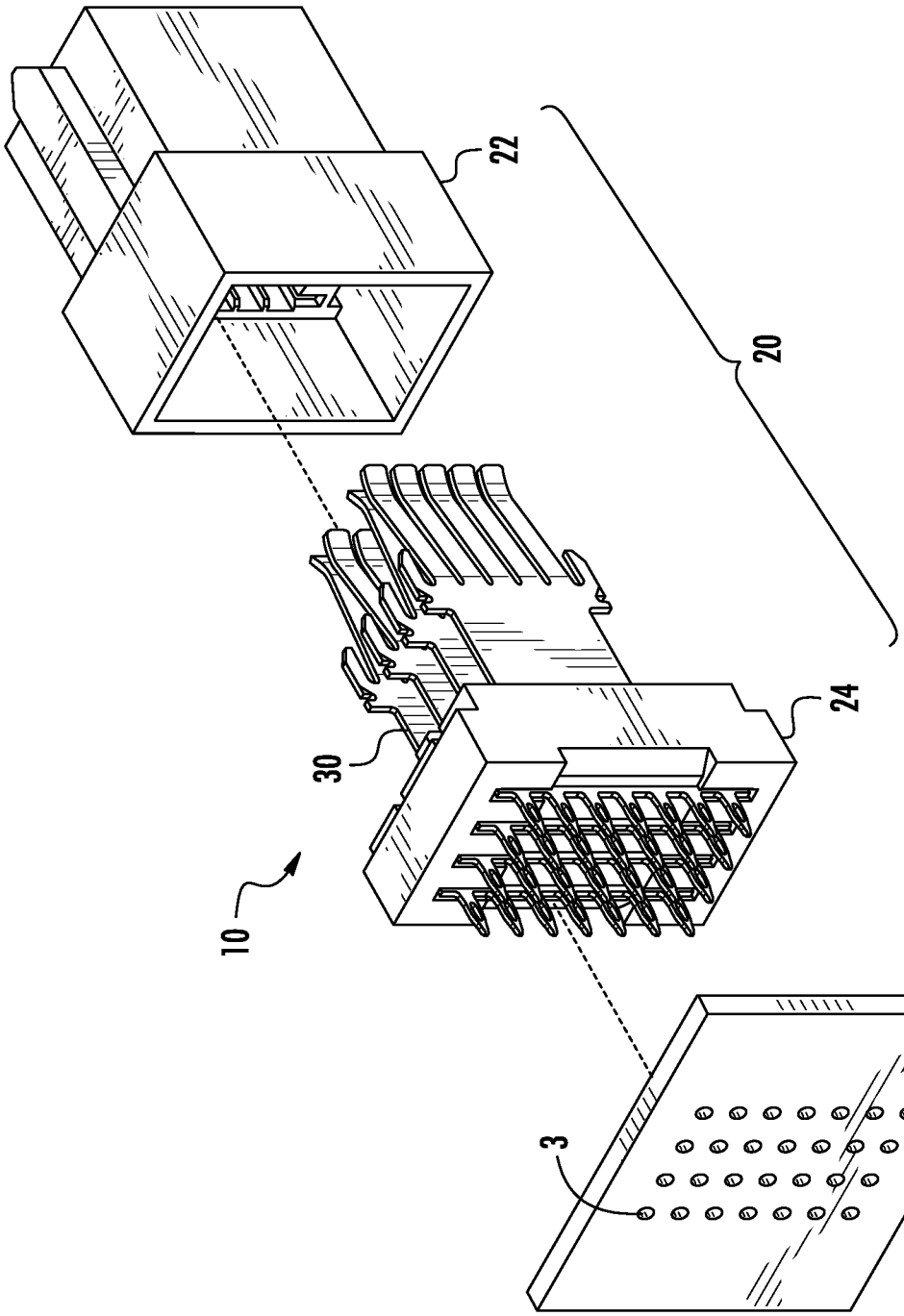

FIG. 3

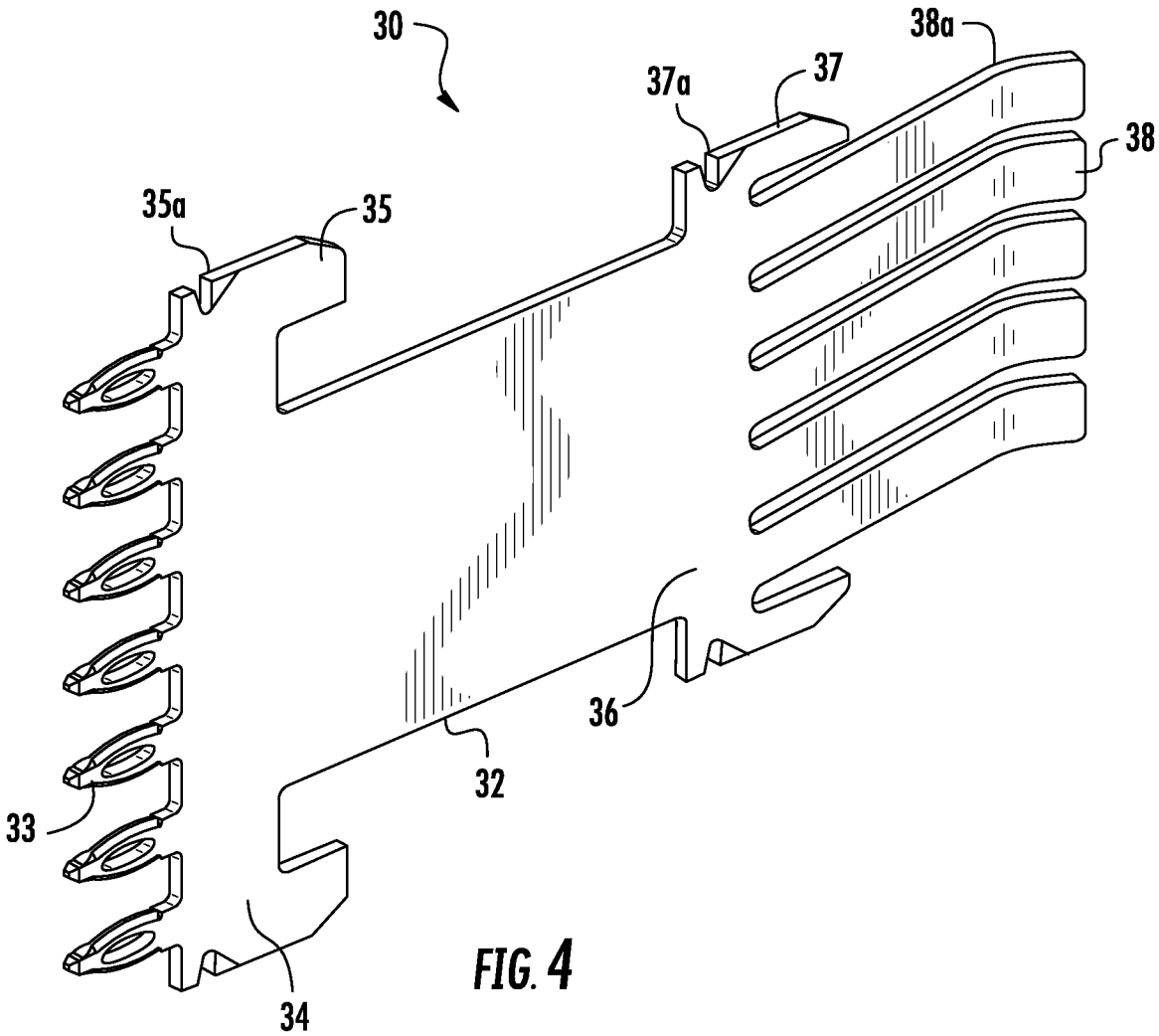

FIG. 4

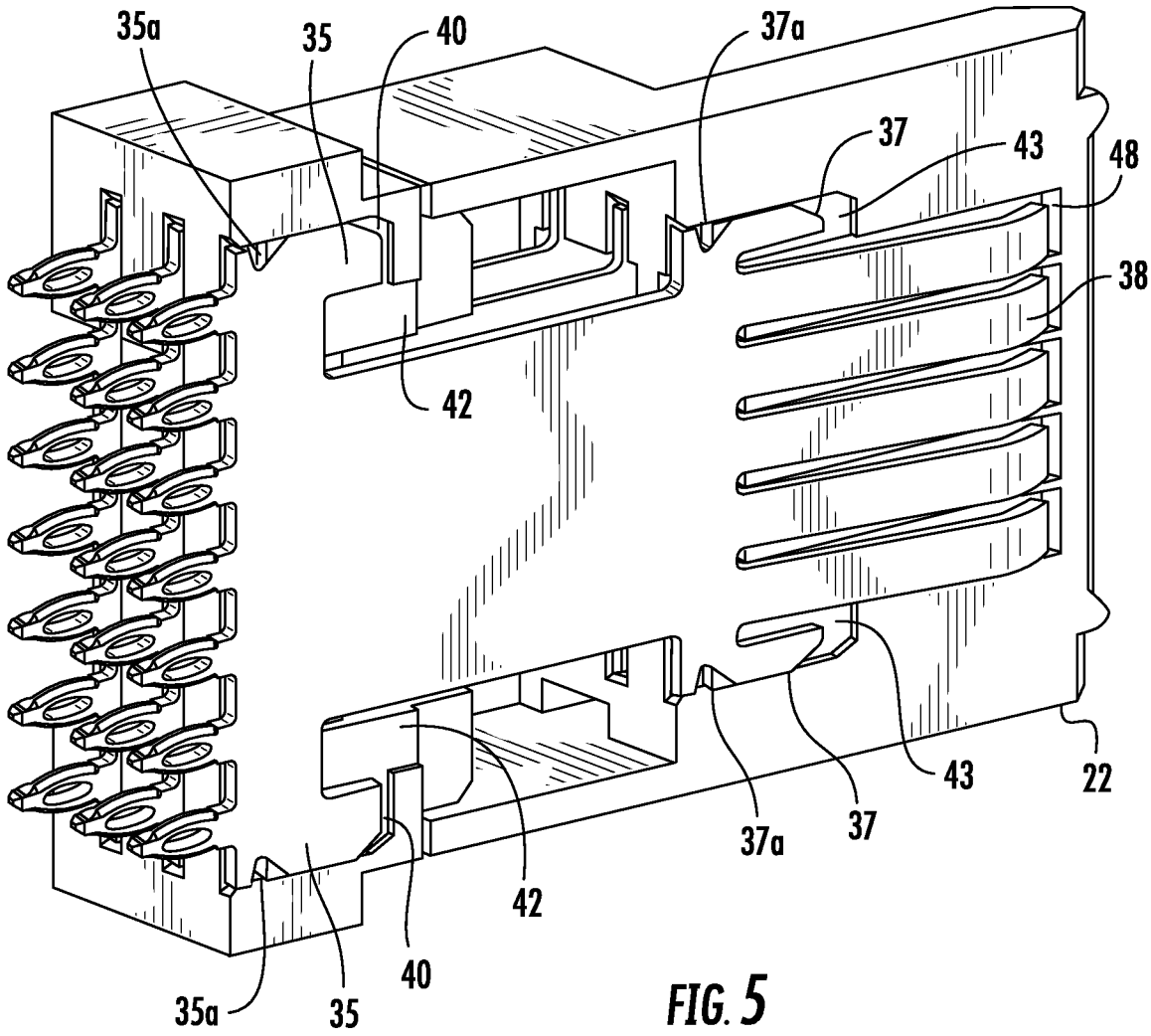

FIG. 5

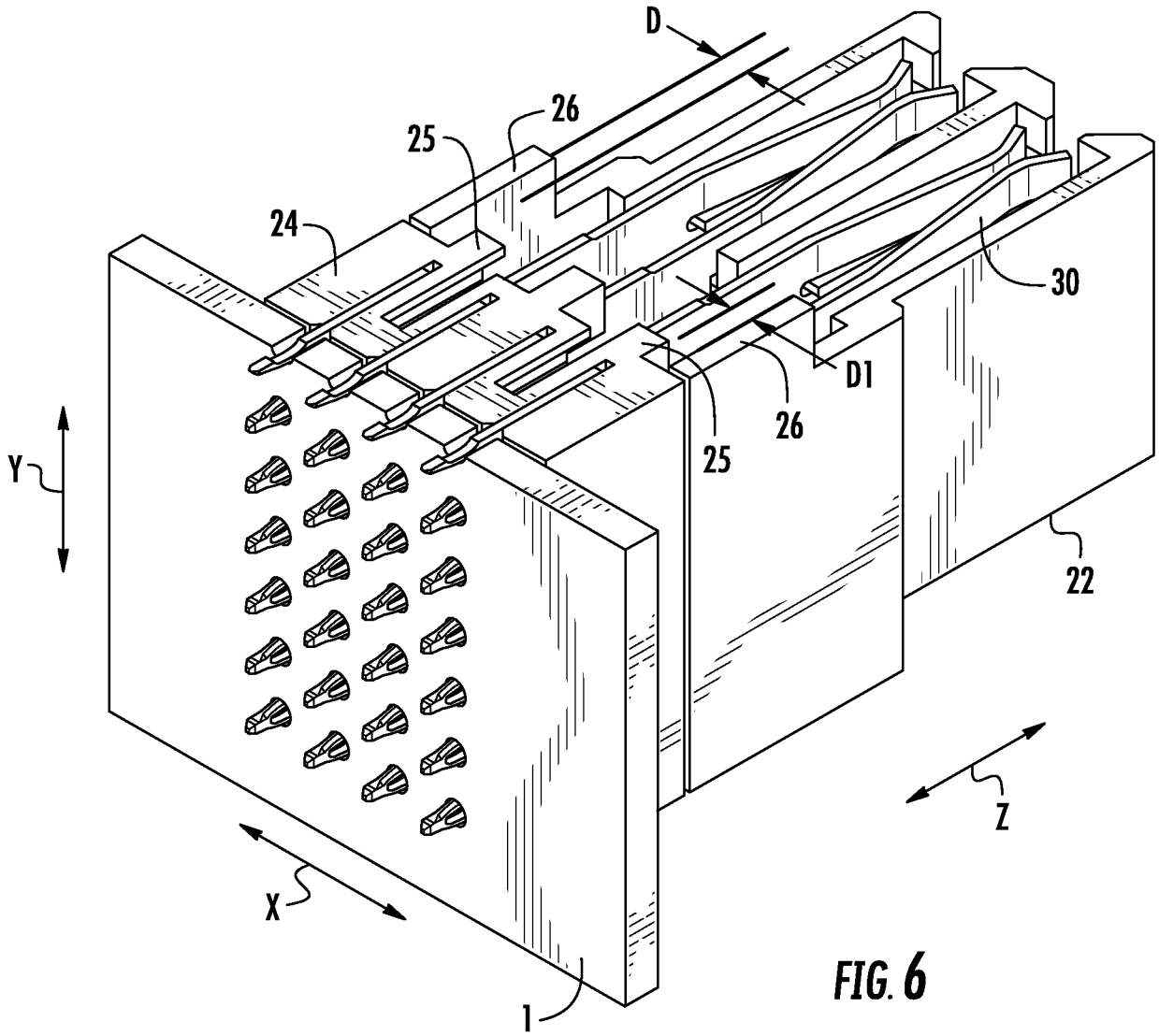

FIG. 6

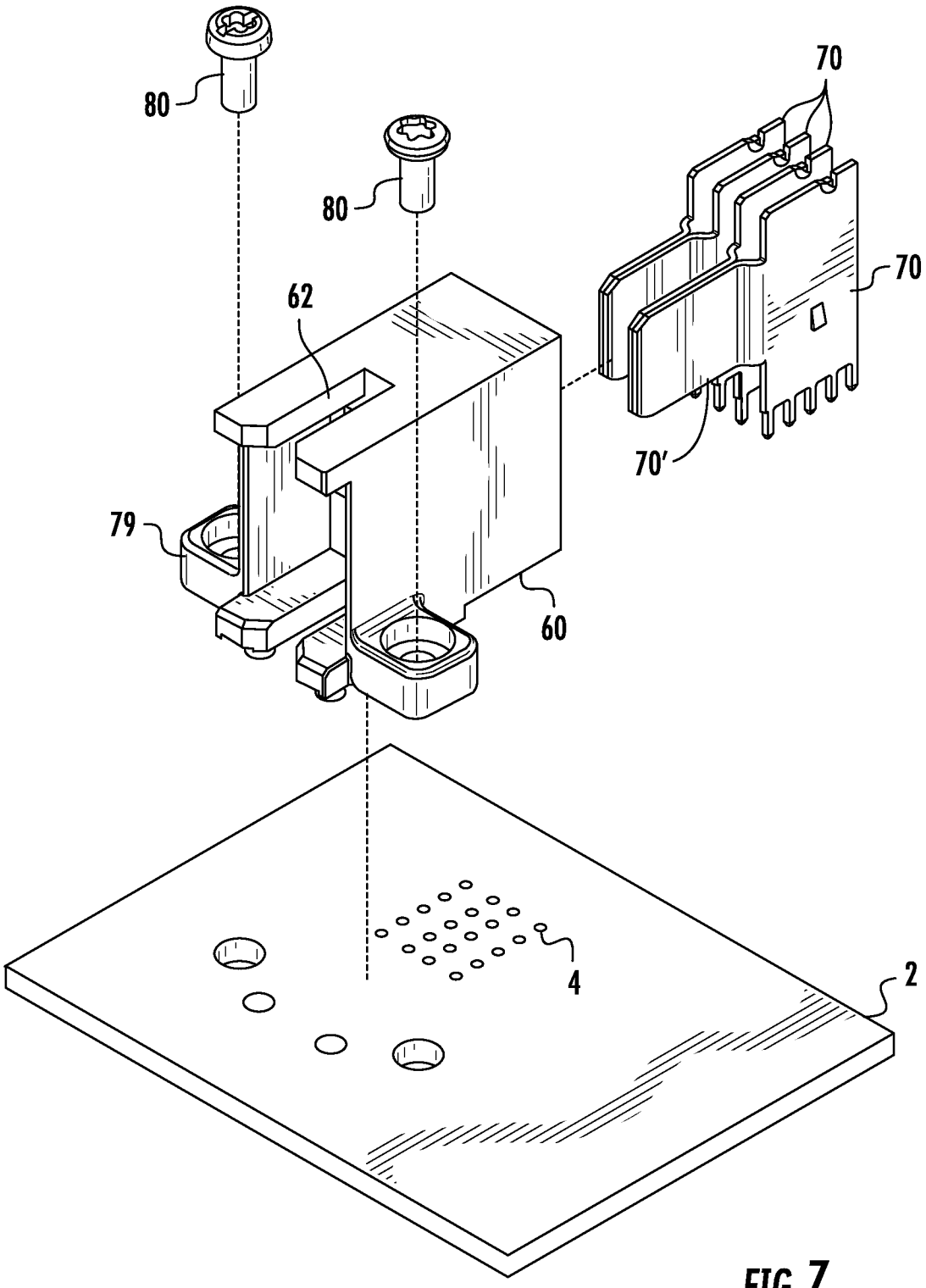

FIG. 7

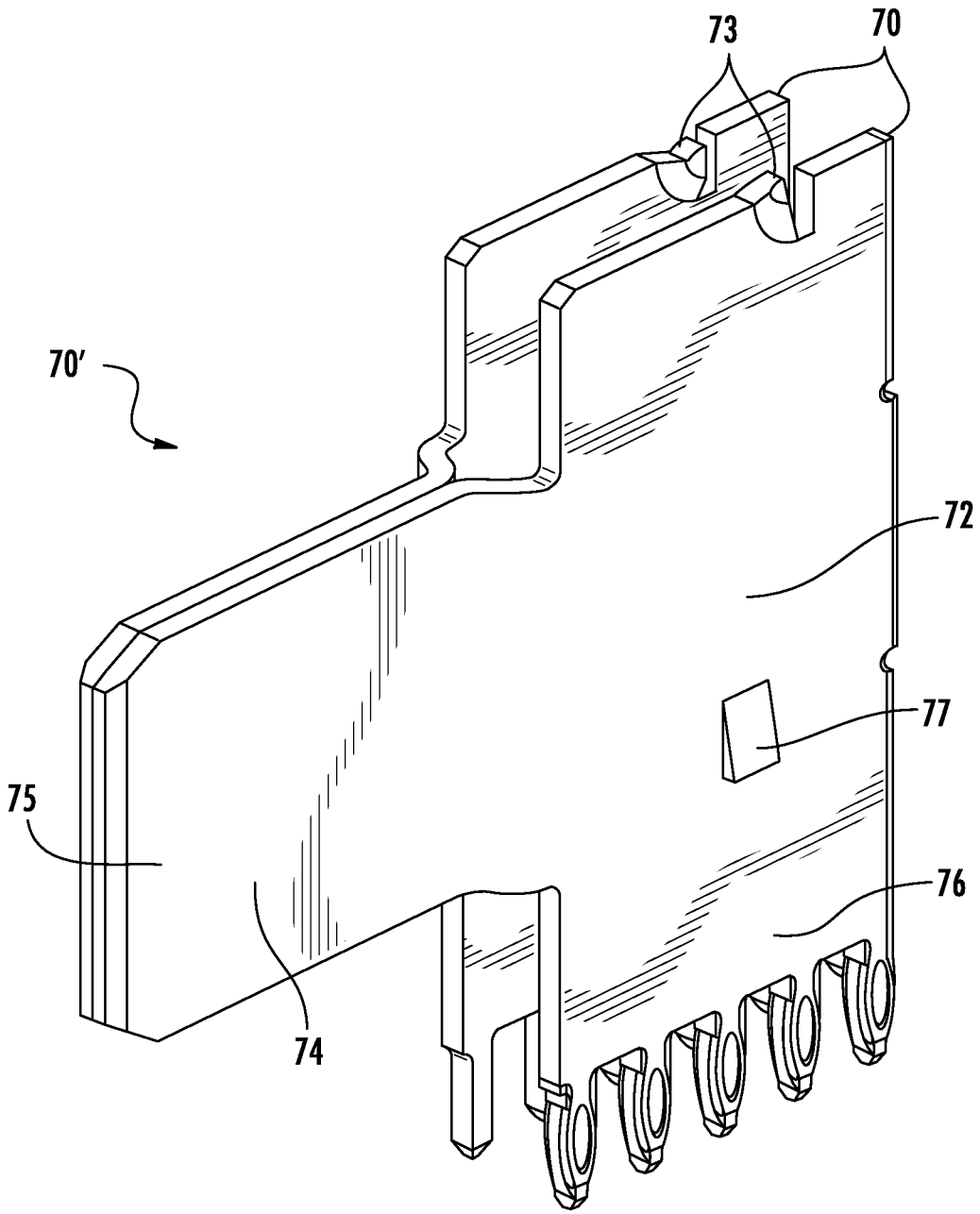

FIG. 8

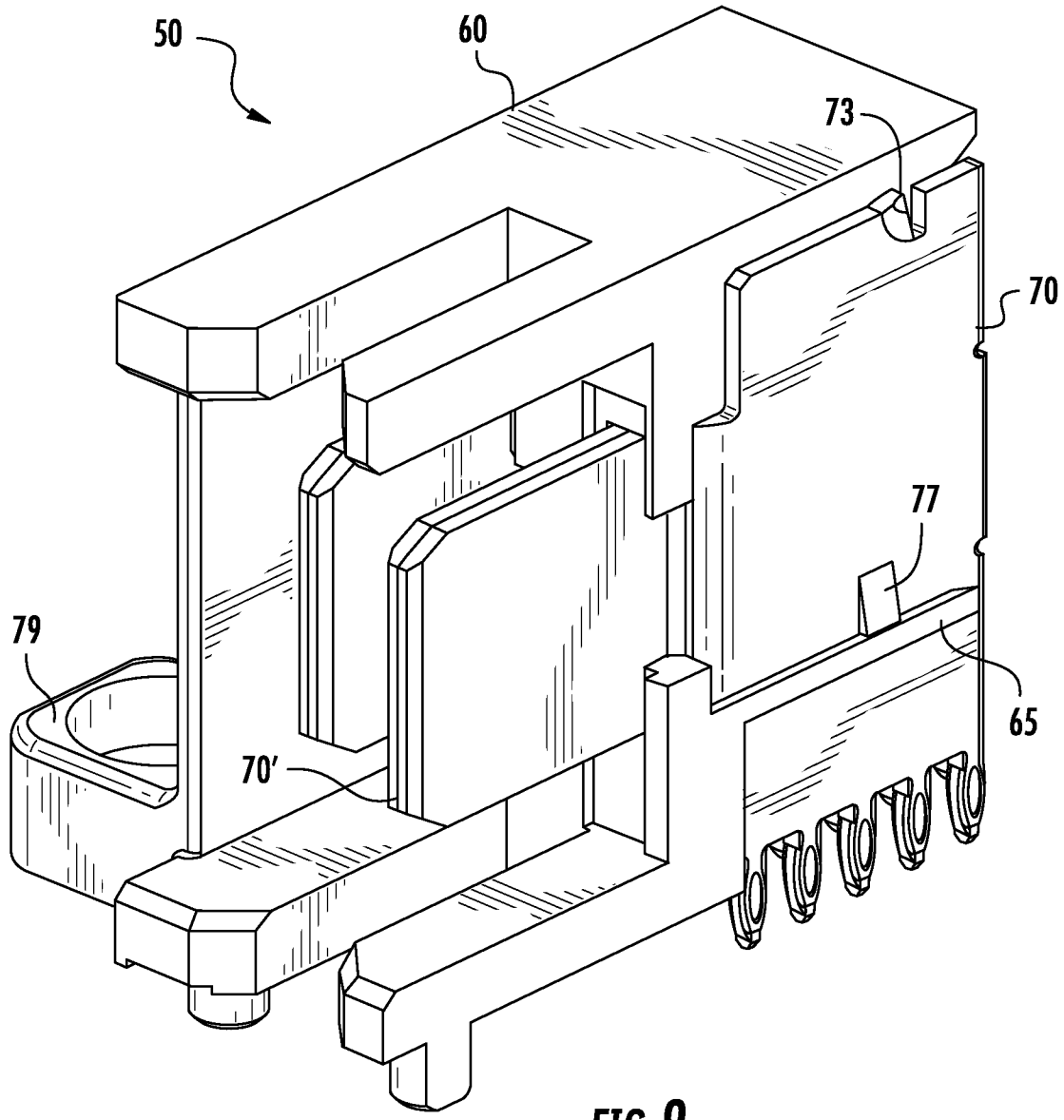

FIG. 9

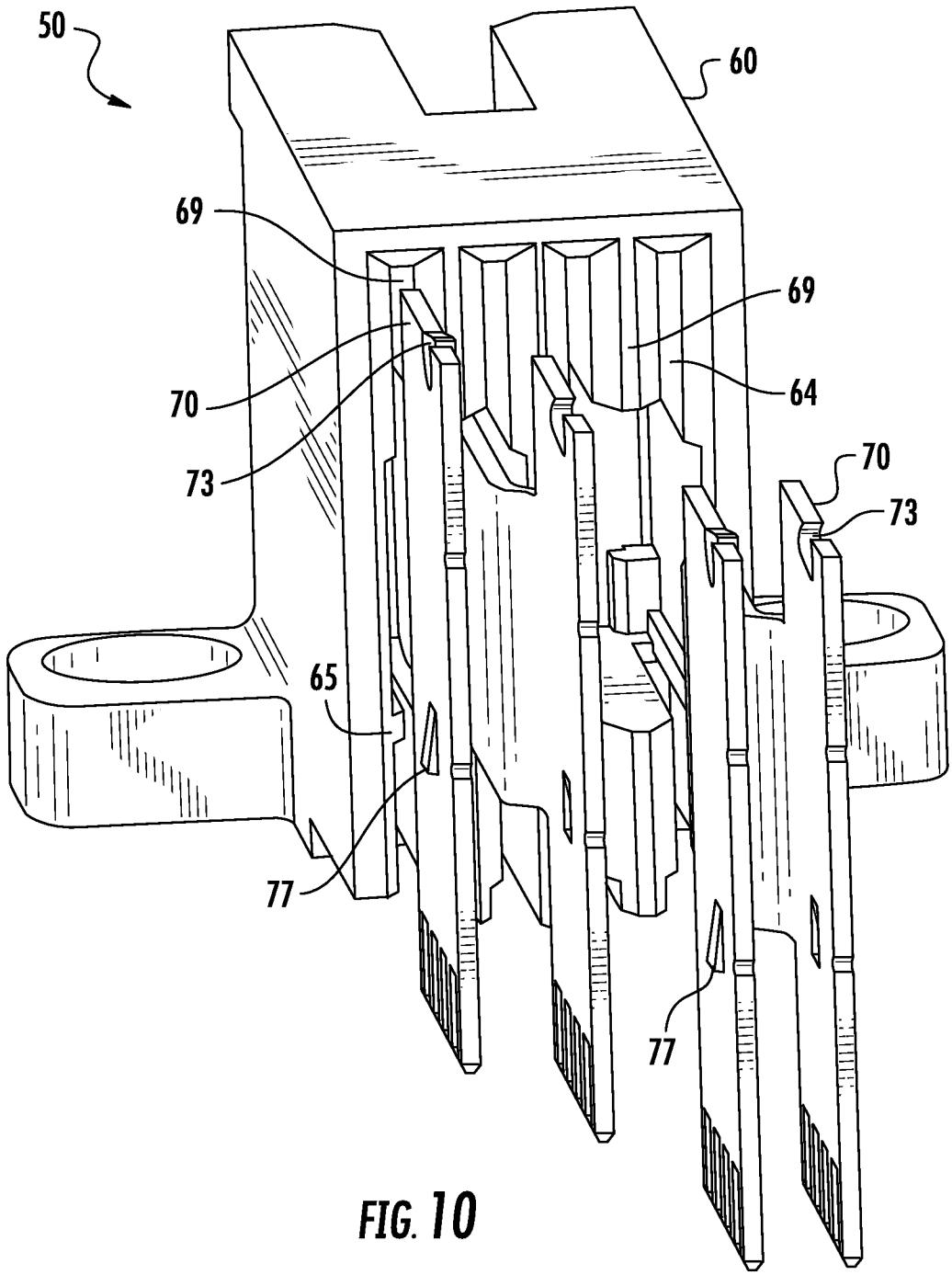

FIG. 10

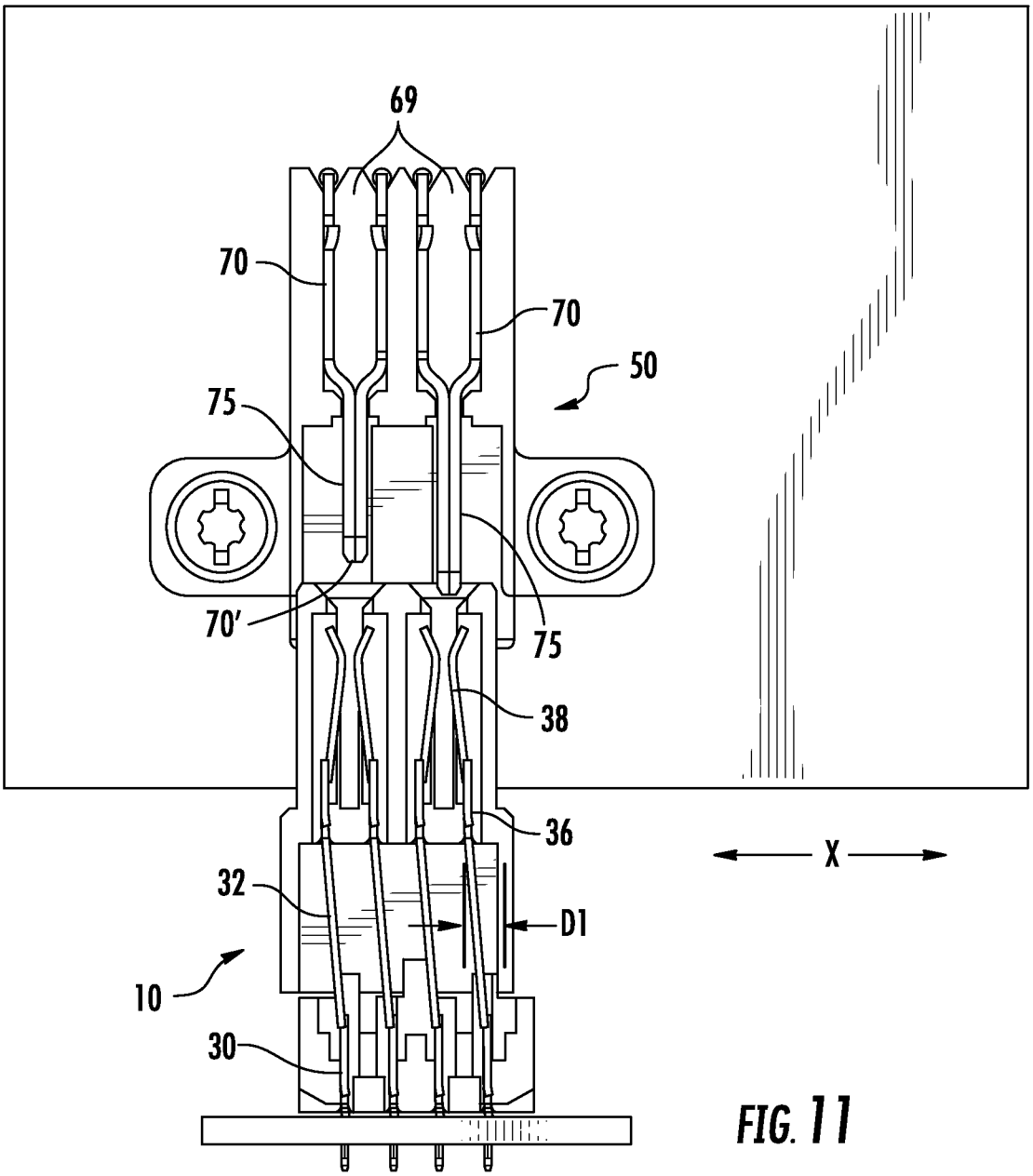

FIG. 11

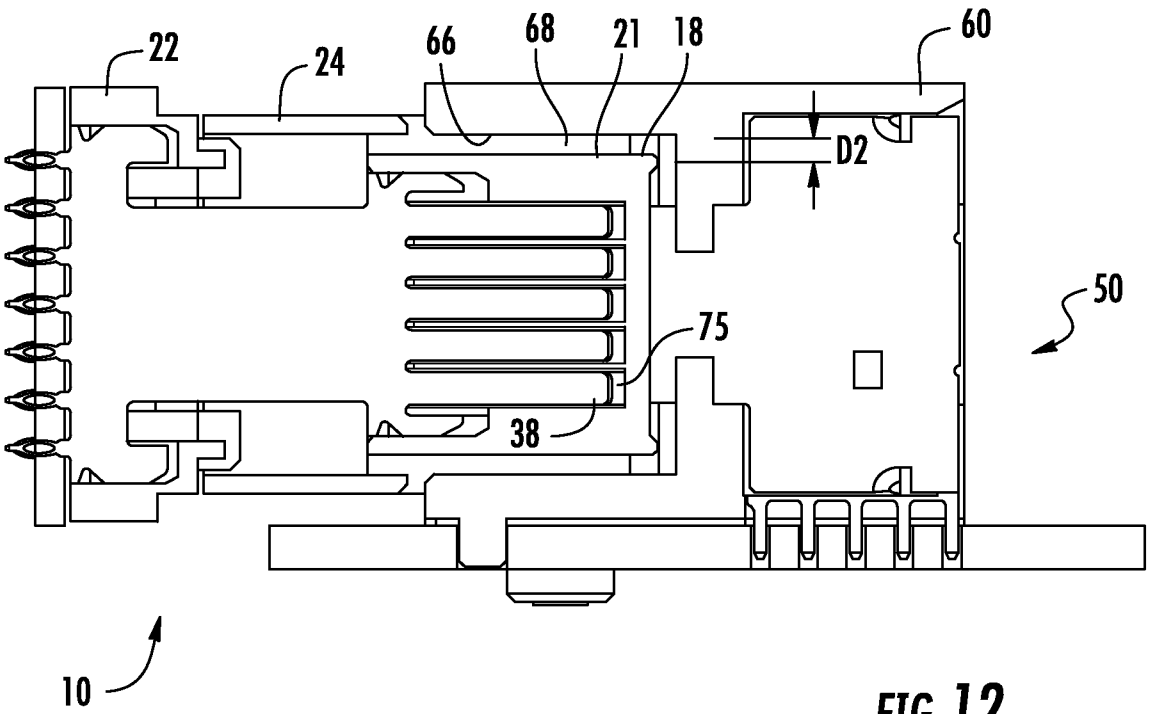

FIG. 12

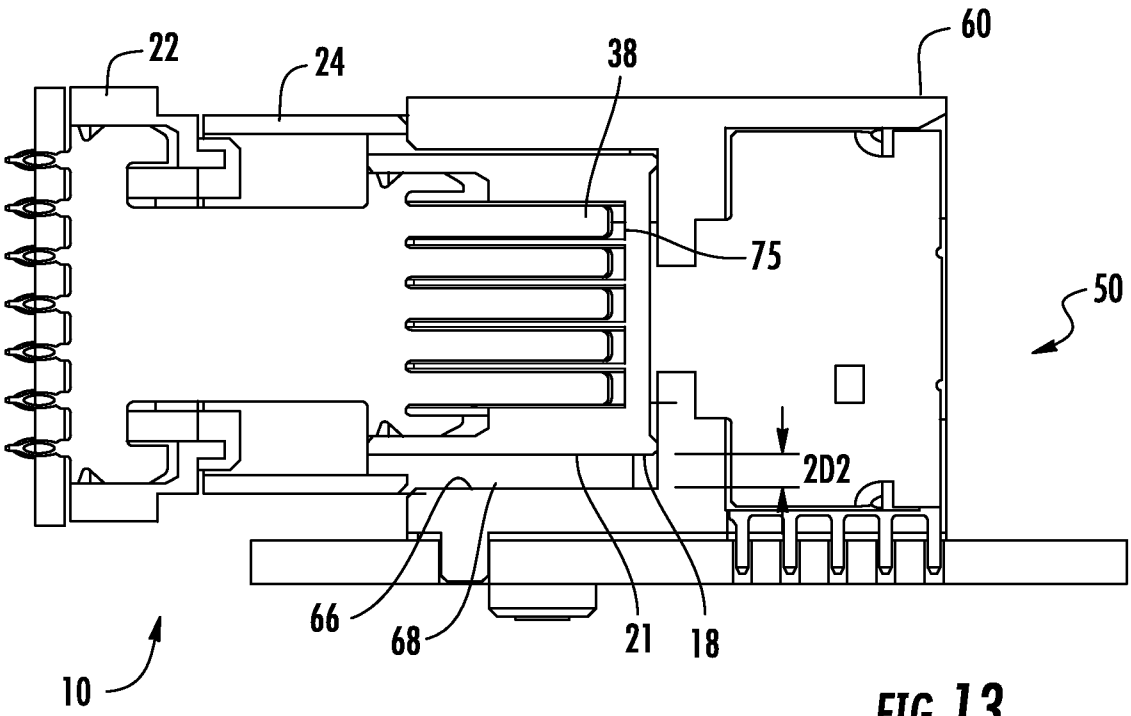

FIG. 13

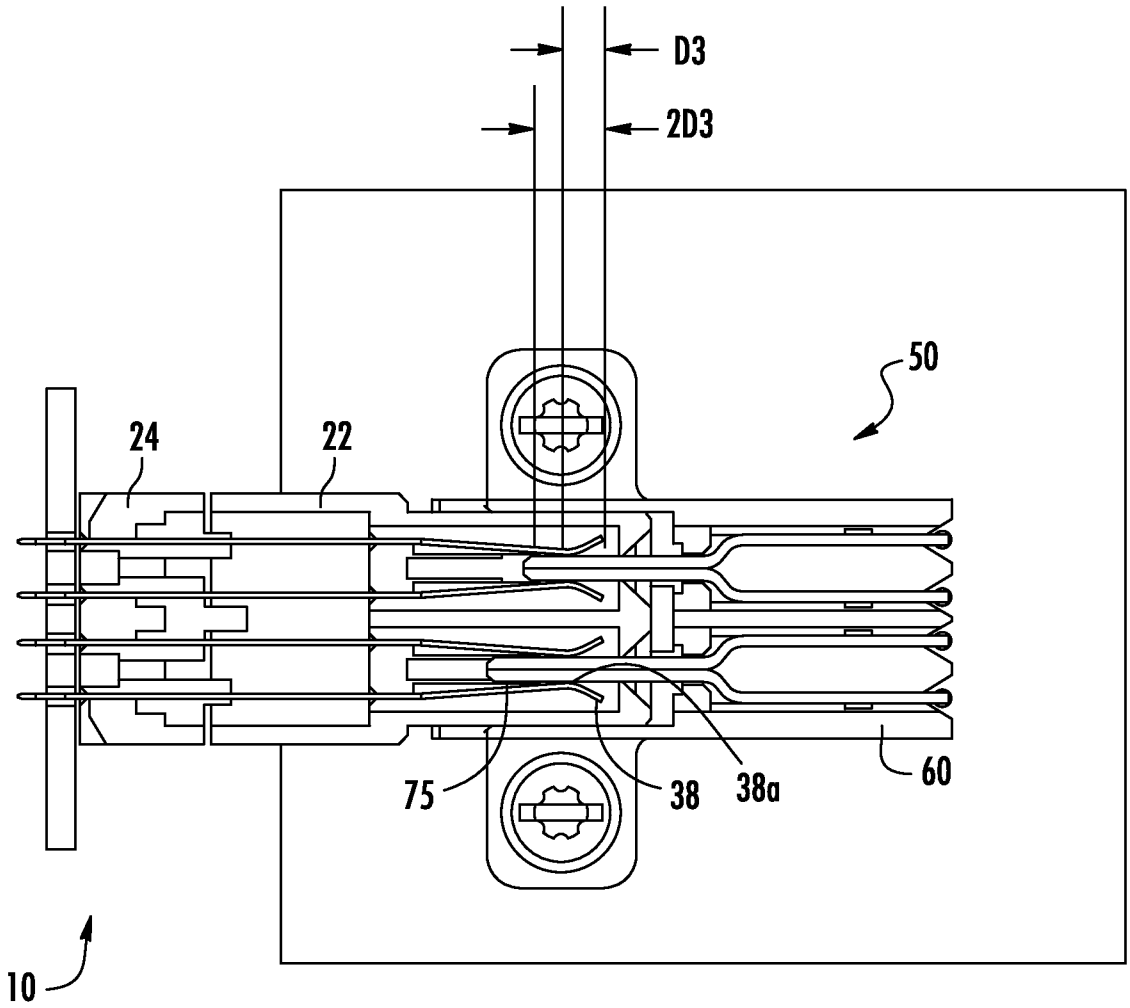

FIG. 14

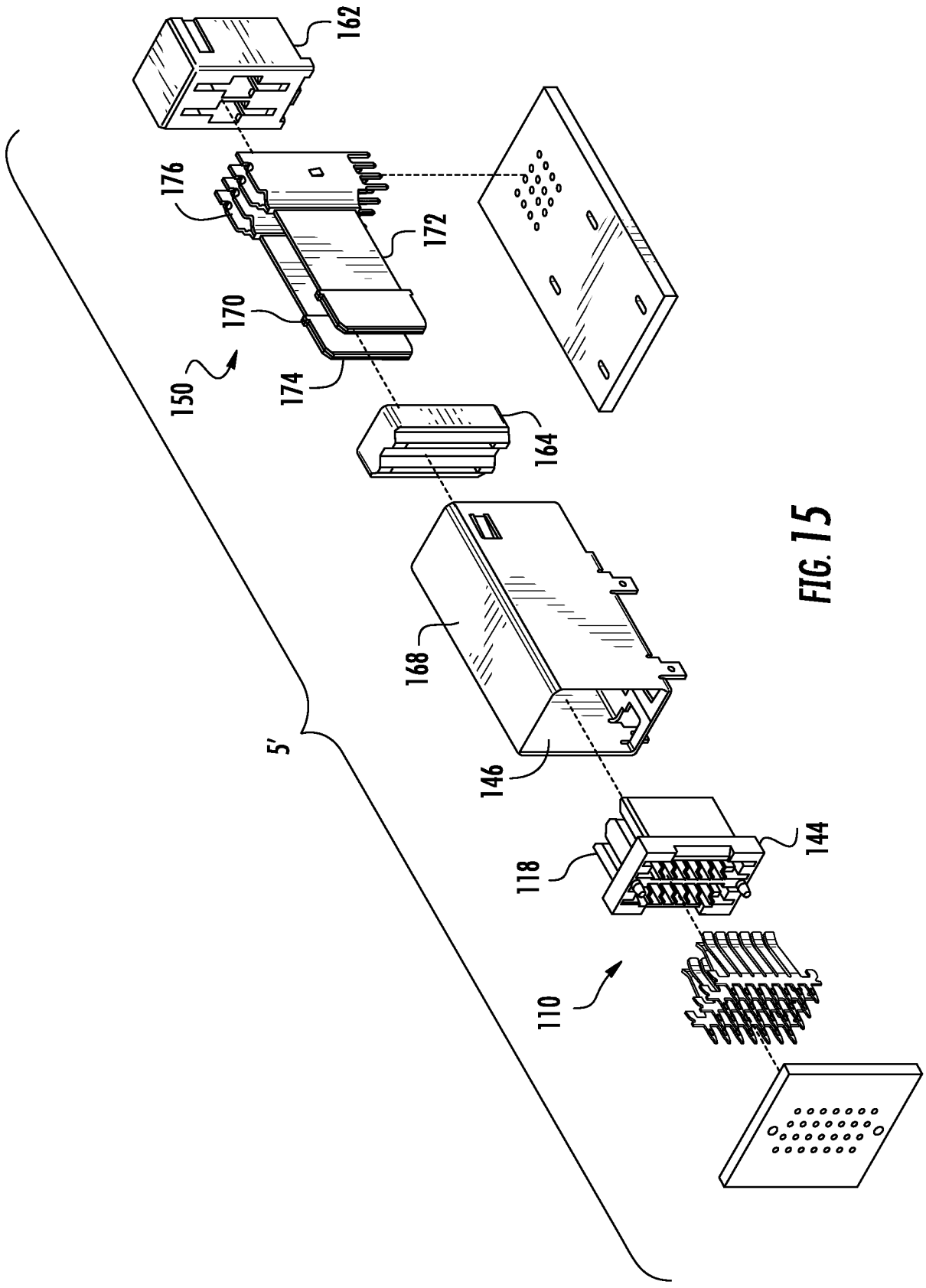

FIG. 15

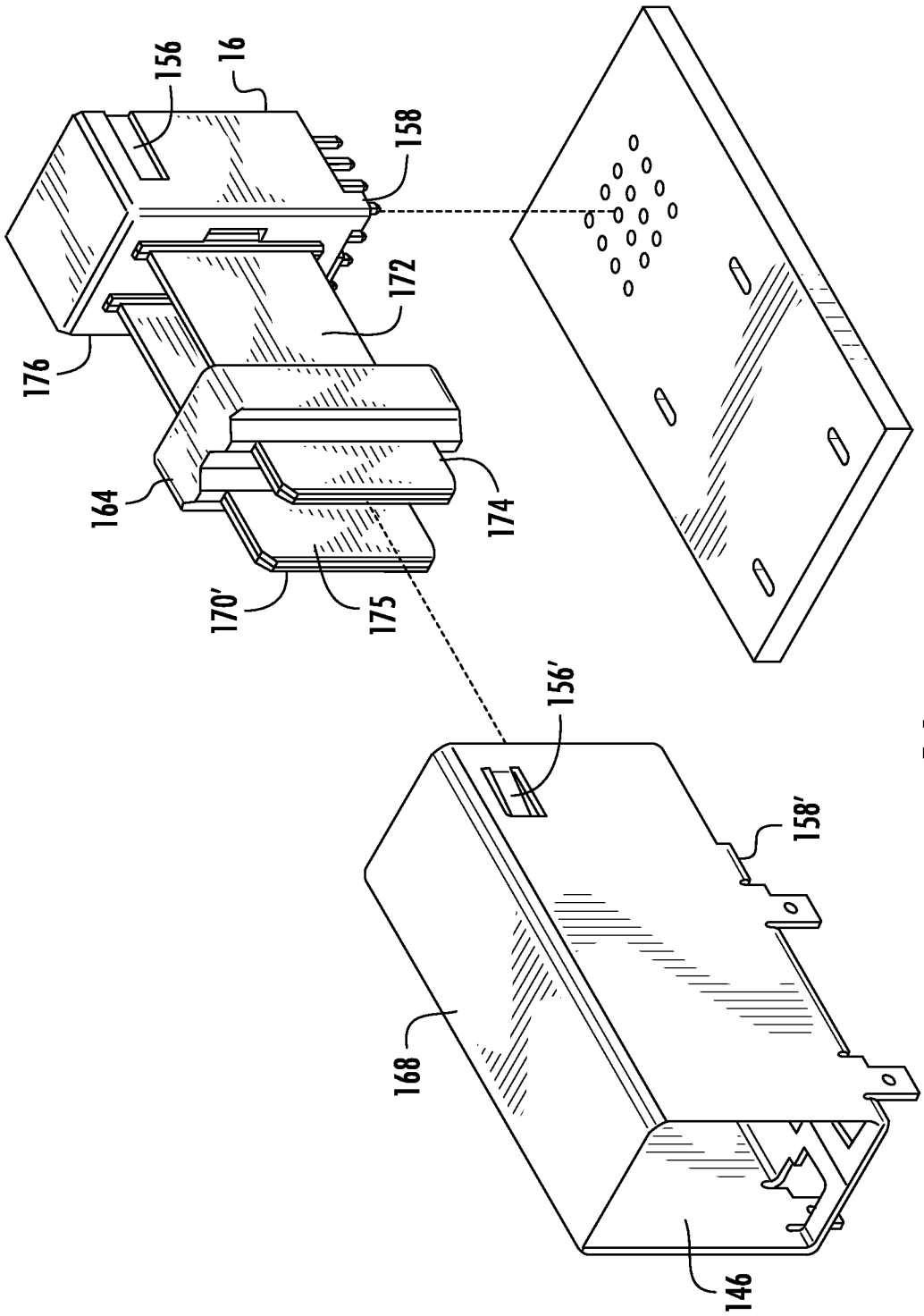

FIG. 16

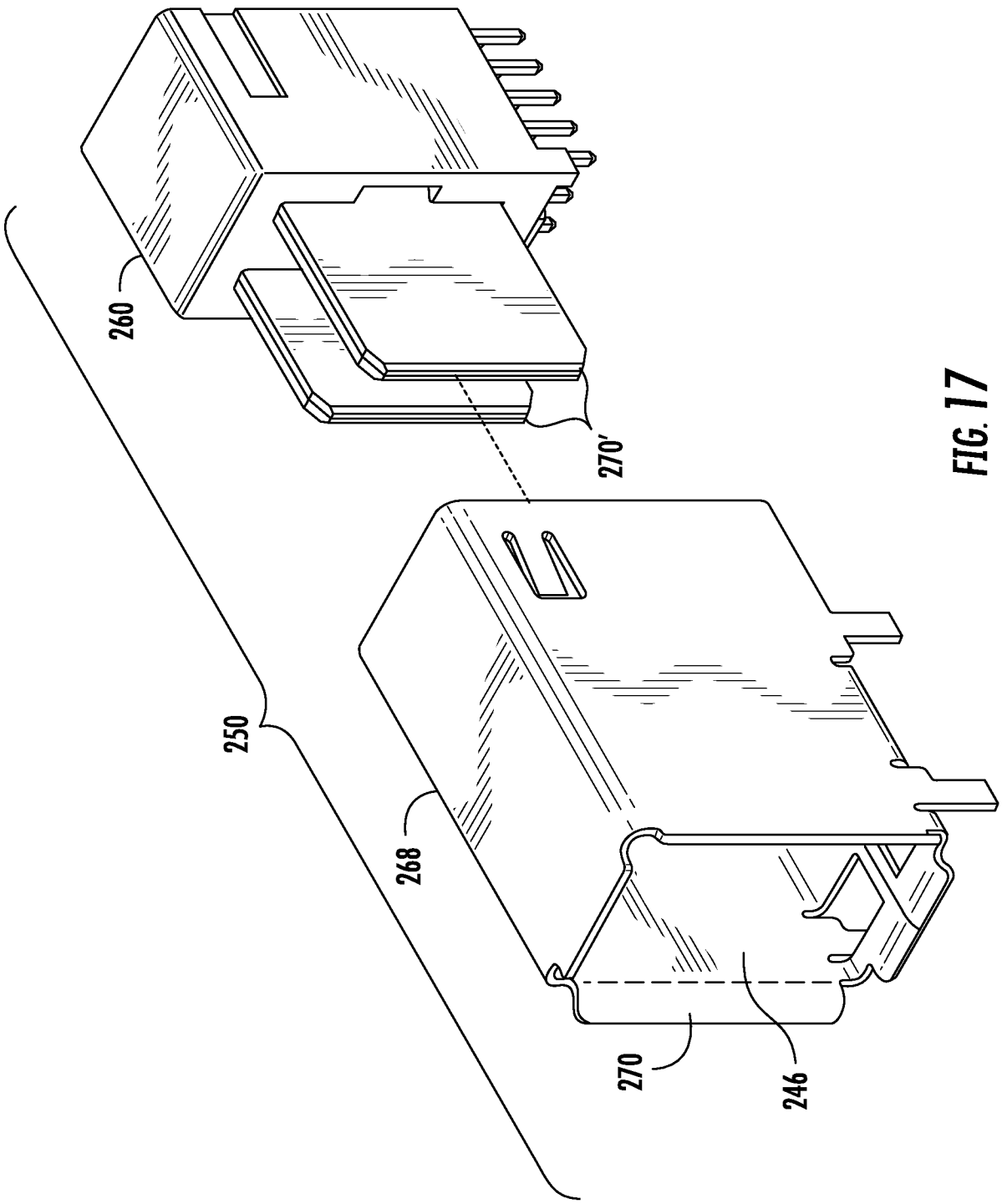

FIG. 17

INTERNATIONAL SEARCH REPORT

International application No.
PCT/US2013/061160

A. CLASSIFICATION OF SUBJECT MATTER

H01R 12/71(2011.01)i

According to International Patent Classification (IPC) or to both national classification and IPC

B. FIELDS SEARCHED

Minimum documentation searched (classification system followed by classification symbols)
H01R 12/71; H01R 3/00; H01R 23/68; H01R 31/08; H01R 13/627; H01R 13/05; H01R 13/10

Documentation searched other than minimum documentation to the extent that such documents are included in the fields searched
Korean utility models and applications for utility models
Japanese utility models and applications for utility models

Electronic data base consulted during the international search (name of data base and, where practicable, search terms used)
eKOMPASS(KIPO internal) & Keywords: connector, housing, terminal, movable, protrusion

C. DOCUMENTS CONSIDERED TO BE RELEVANT

Category*	Citation of document, with indication, where appropriate, of the relevant passages	Relevant to claim No.
X	JP 2012-038497 A (HIROSE ELECTRIC CO., LTD.) 23 February 2012 See abstract, paragraphs [0022]-[0041], claim 1 and figures 1-6.	1-7,11
Y		8-10,12-18
Y	US 5370543 A (ATSUSHI HAMADA et al.) 06 December 1994 See column 3, line 50 - column 6, line 65, claim 1 and figure 1.	8-10,12-18
A	US 5588872 A (MASARU FUKUDA) 31 December 1996 See abstract, column 3, line 37 - column 4, line 43 and figures 1, 3-4.	1-18
A	US 2008-0124966 A1 (CHEE BOON VINCENT LIM) 29 May 2008 See paragraphs [0045]-[0071], claim 1 and figures 1A-9C.	1-18
A	JP 10-312868 A (SUMITOMO WIRING SYST., LTD.) 24 November 1998 See abstract, paragraphs [0009]-[0029], claim 1 and figures 1-2, 4.	1-18

☐ Further documents are listed in the continuation of Box C.

☒ See patent family annex.

* Special categories of cited documents:
"A" document defining the general state of the art which is not considered to be of particular relevance
"E" earlier application or patent but published on or after the international filing date
"L" document which may throw doubts on priority claim(s) or which is cited to establish the publication date of another citation or other special reason (as specified)
"O" document referring to an oral disclosure, use, exhibition or other means
"P" document published prior to the international filing date but later than the priority date claimed
"T" later document published after the international filing date or priority date and not in conflict with the application but cited to understand the principle or theory underlying the invention
"X" document of particular relevance; the claimed invention cannot be considered novel or cannot be considered to involve an inventive step when the document is taken alone
"Y" document of particular relevance; the claimed invention cannot be considered to involve an inventive step when the document is combined with one or more other such documents,such combination being obvious to a person skilled in the art
"&" document member of the same patent family

Date of the actual completion of the international search	Date of mailing of the international search report
15 January 2014 (15.01.2014)	**17 January 2014 (17.01.2014)**

Name and mailing address of the ISA/KR
Korean Intellectual Property Office
189 Cheongsa-ro, Seo-gu, Daejeon Metropolitan City, 302-701, Republic of Korea
Facsimile No. +82-42-472-7140

Authorized officer
KIM, Sung Gon
Telephone No. +82-42-481-8746

INTERNATIONAL SEARCH REPORT

Information on patent family members

International application No.
PCT/US2013/061160

Patent document cited in search report	Publication date	Patent family member(s)	Publication date
JP 2012-038497 A	23/02/2012	None	
US 05370543 A	06/12/1994	EP 0583056 A1	16/02/1994
		EP 0583056 B1	21/08/1996
		JP 06-089759 A	29/03/1994
		KR 10-1997-0004223 B1	26/03/1997
US 05588872 A	31/12/1996	JP 07-106023 A	21/04/1995
		JP 3264297 B2	11/03/2002
US 2008-0124966 A1	29/05/2008	CN 101188338 A0	28/05/2008
		EP 1926183 A2	28/05/2008
		JP 2008-130546 A	05/06/2008
		KR 10-1329952 B1	14/11/2013
		KR 10-2008-0046566 A	27/05/2008
		SG 143088 A1	27/06/2008
		US 7404731 B2	29/07/2008
JP 10-312868 A	24/11/1998	None	