W. A. PARTRIDGE & W. L. & C. L. HUMMEL.

AUTOMATIC PICTURE DISPLAY MACHINE.

APPLICATION FILED MAY 24, 1912.

1,166,384.

Patented Dec. 28, 1915.

3 SHEETS—SHEET 1.

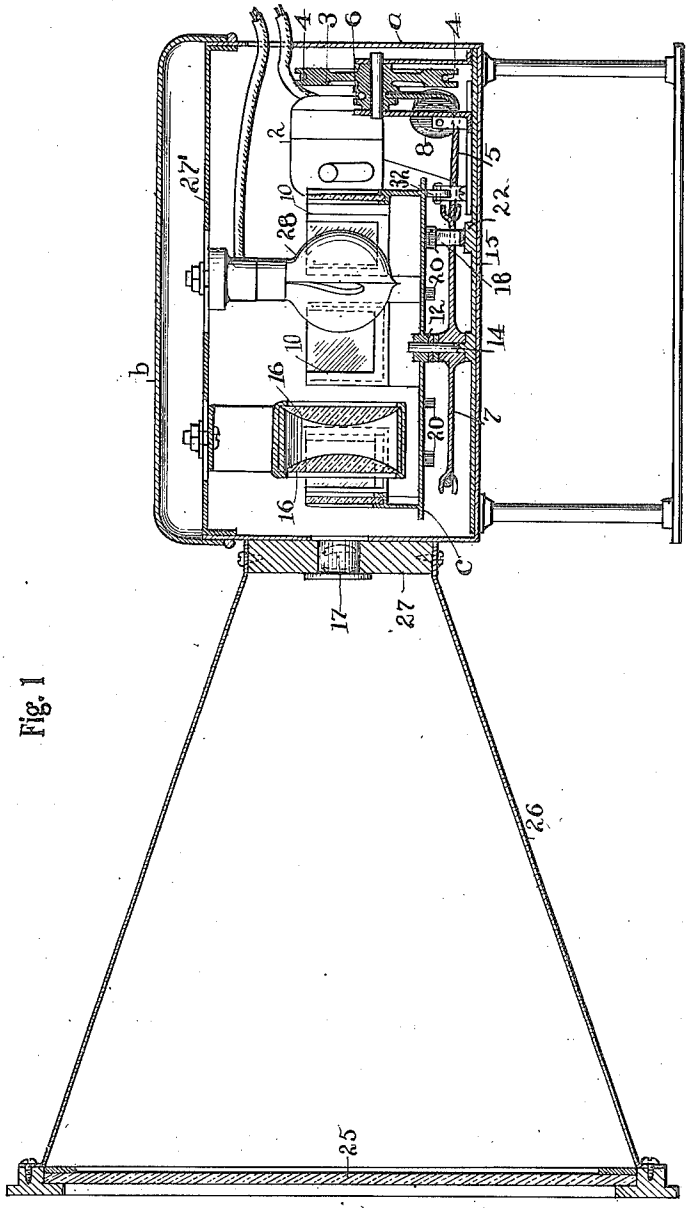

Fig. 1

ATTEST
E. M. Fisher
D. C. Mercein.

INVENTORS
WILLIAM A. PARTRIDGE
WALTER L. HUMMEL
CARL L. HUMMEL
By Fisher & Mercein ATTYS.

W. A. PARTRIDGE & W. L. & C. L. HUMMEL.

AUTOMATIC PICTURE DISPLAY MACHINE.

APPLICATION FILED MAY 24, 1912.

1,166,384.

Patented Dec. 28, 1915.

3 SHEETS—SHEET 2.

Fig. 2

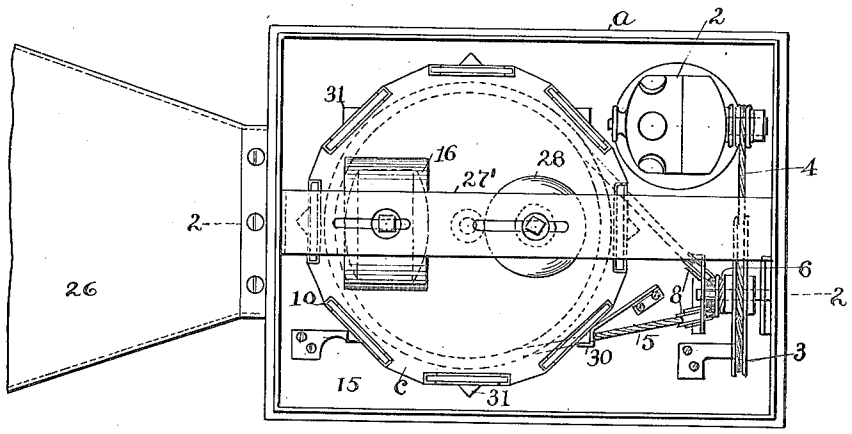

Fig. 3

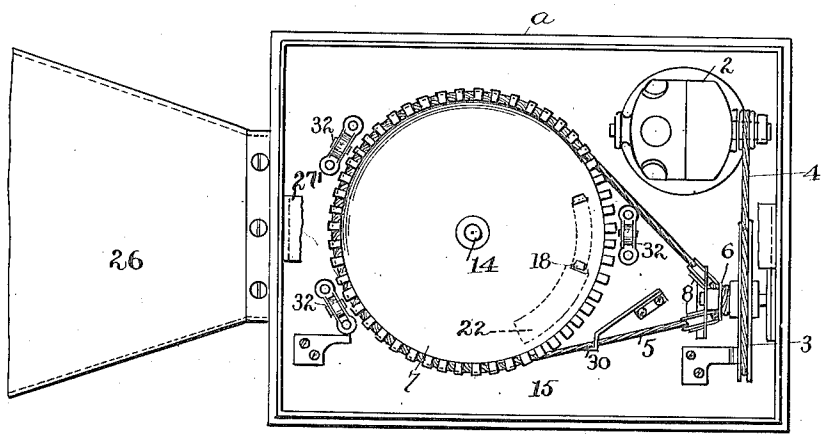

ATTEST

E. M. Fisher

D. C. Mussun

INVENTORS

WILLIAM A PARTRIDGE

WALTER L. HUMMEL

CARL L. HUMMEL

BY Fisher & Moser

ATTYS

W. A. PARTRIDGE & W. L. & C. L. HUMMEL.

AUTOMATIC PICTURE DISPLAY MACHINE.

APPLICATION FILED MAY 24, 1912.

1,166,384.

Patented Dec. 28, 1915.

3 SHEETS—SHEET 3.

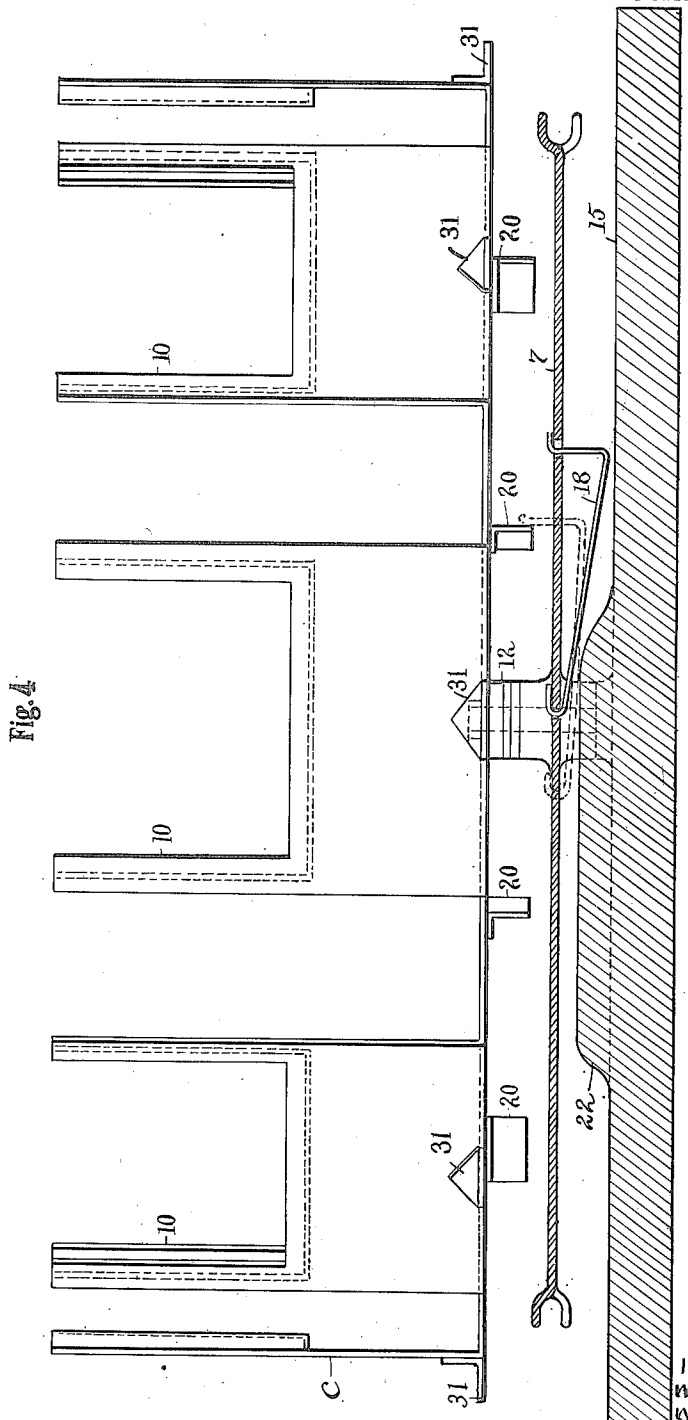

Fig. 4.

ATTEST
E. M. Fisher
J. C. Musselman

INVENTORS.
WILLIAM A. PARTRIDGE
WALTER L. HUMMEL
CARL L. HUMMEL

BY Fisher & Moser ATTYS.

UNITED STATES PATENT OFFICE.

WILLIAM A. PARTRIDGE, WALTER L. HUMMEL, AND CARL L. HUMMEL, OF CLEVELAND, OHIO, ASSIGNORS TO ELECTRIC MOVOGRAPH COMPANY, OF CLEVELAND, OHIO.

AUTOMATIC PICTURE-DISPLAY MACHINE.

1,166,384. Specification of Letters Patent. Patented Dec. 28, 1915.

Application filed May 24, 1912. Serial No. 699,550.

To all whom it may concern:

Be it known that we, WILLIAM A. PARTRIDGE, WALTER L. HUMMEL, and CARL L. HUMMEL, citizens of the United States, residing at Cleveland, in the county of Cuyahoga and State of Ohio, have invented certain new and useful Improvements in Automatic Picture-Display Machines, of which the following is a specification.

This invention pertains to an automatic picture display machine, and the object of the invention is to provide a machine in or through which a series of pictures may be successively projected upon a transparent exhibiting surface or screen, as a frosted glass, and which is adapted to detain the picture for a predetermined interval in display position before bringing another picture into focus, all substantially as shown and described and particularly pointed out in the claims.

In the accompanying drawings, Figure 1 is a longitudinal sectional elevation on line 1—1, Fig. 2, and Fig. 2 is a plan view of the machine. Fig. 3 is a plan view with the slide carrier removed and showing the toothed sheave or wheel beneath through which rotative movement is applied to said carrier. Fig. 4 is a side elevation of the slide carrier and a sectional elevation of the base and a portion of the said sheave on the line of the catch therein adapted to engage the carrier and move it forward one step at a time as hereinafter described.

As thus shown the machine is inclosed within a suitable casing or receptacle *a*, preferably of sheet metal and having leg or equivalent supports, and a close cover *b* hinged to throw wide open. When open the internal mechanism is exposed and which consists in sundry parts comprising a prime mover, which in this instance is a small electric motor 2, but might be a spring actuated or equivalent medium for imparting power to the machine. In any event power is transmitted to the slide carrier *c* from said motor or prime mover, preferably by sheave and pulley devices, a relatively large sheave 3 being shown in this instance which is driven directly from the motor by a belt or cord 4 and another cord 5 running over and extending from a pulley 6 on the axle of sheave 3 to and upon the periphery of wheel or sheave 7 which is disposed horizontally in the bottom of the casing and adapted to engage the carrier *c* and rotate the same predetermined distances at regular intervals. The sheave 7 is preferably made of heavy sheet metal with teeth at its edge thrown alternately in opposite directions to provide a channel for the belt 5, which runs on intermediate idlers 8 disposed at an inclination to each other to give the right direction to the belt, as it approaches the said sheave from the pulley 6. Constant rotation of the said sheave is provided for when the motor is in operation, and the said carrier is engaged by said sheave and turned a sufficient distance to bring the next succeeding picture into focus and so on continually, the pause or rest of the carrier being such as to afford ample time to see and enjoy the picture that may for the time be exposed and which is quickly changed to the next picture by giving the carrier an eighth of a rotation.

The carrier *c* is octagonal in shape as shown herein and has a series of slide supporting panels 10 corresponding to its eight different sides, said panels being channeled inside to receive and hold the slides, Fig. 4. The said carrier likewise is preferably made of sheet metal and has a central bearing 12 adapted to seat rotatably upon the vertically disposed spindle 14 which also is the center of rotation of sheave 7 and is fixed in or upon the base 15.

Rotation of the carrier *c* to bring the successive pictures into display position in front of the two sets of lenses, 16 and 17, respectively, is effected through a simple mechanism comprising a sheet metal catch 18, Fig. 4, which is bent at one end and hung in a corresponding slot in the sheave 7, forming a hinge and provided with an upwardly extending lip at the other end projected through a slot in said sheave and adapted to be raised into engagement with one or another of the several teeth 20 on the bottom of the carrier. The said teeth or downward projections or lugs may be integral members struck from the bottom of the carrier or be otherwise provided, and correspond in number and position to the panels in the carrier and are arranged in a circle in the path of catch 18. The said catch is adapted to drop by gravity out of engaging position and to ride in that way

over the base 15 till it reaches the swell or lift portion 22 which stands up from the base proper and raises the catch into engagement with the next succeeding tooth 20 as it rotates forward to that position. The carrier is then engaged through said tooth, projection or lug 20 and turned rotarily forward the distance of one panel, which brings the corresponding slide or picture into focus before the lenses. As this occurs the said catch has moved over the said lift or swell 22 and drops down out of engagement as seen in full lines Fig. 4. This continues until another revolution of the sheave is made when the action is repeated and so on.

The speed of the motor of whatever kind is regulated or timed according to the speed of exhibition desired, and in any case the picture is thrown upon the screen 25 where it is displayed in distinct outline with all its original characteristics clearly brought out and preserved. The said screen is square and supported in or by a four sided and tapered hood or holder 26 which has its smaller end closely sleeved and fastened upon a square support 27 of suitable depth and which is fixed upon the body or case of the machine by screws or otherwise and provided with a circular opening in its center corresponding to the reduced size of the support for the smaller lens 17 therein.

The lenses 16 are supported in a suitable hanger from a strip or bar 27′ fixed midway across the top of casing *a* and the electric light or bulb 28 is likewise supported by the said bar or cross piece which has slots in which said parts are adjustably secured.

As the carrier *c* reaches each stopping point with its pictures in focus a spring detaining finger 30 fixed on the bottom 15 comes into engagement with the corresponding V-shaped lug 31 on the edge of the carrier centrally of each slide panel thereon and holds the carrier temporarily and until the next positive forward movement through the catch 18. The engagement of the carrier by finger 30 is simultaneous with the disengagement by said catch. Rollers 32 also are provided at intervals to support the carrier.

Obviously the lenses 16 and the lamp 28 are situated within the carrier and adjustable in relation to each other and to the slides, which pass between the respective lenses 16 and 17.

Any suitable screen may be substituted for the frosted glass screen 25, and, if preferred, a positive gear mechanism may be substituted for belt 5 which is shown herein to rotate sheave or wheel 7.

What we claim is:

1. A picture machine having a bottom provided with a vertically disposed post and a raised portion at one side of said post, a horizontally rotatable wheel mounted on said post, a catch pivotally attached at one end to said wheel near said post, and having a right angled outer end with a lip over the top of the said wheel and adapted to rise and fall therein as it rides over said raised portion of the base, in combination with a rotatable carrier mounted centrally over said wheel and having a series of downward projections at intervals on its bottom in the path of said catch and adapted to be engaged successively thereby, said carrier having projections at intervals on its periphery and a spring stop adapted to engage said projections and detain said carrier as it is released by said catch.

2. A picture display machine comprising a base and a post thereon, a constantly rotatable wheel horizontally positioned on said post immediately over the said base, a rotatable slide carrier mounted on the said post next above said wheel and provided with downward projections at intervals on its bottom, and outward projections on its periphery corresponding to said downward projections, a gravity catch pivotally supported by said wheel and adapted to be raised and lowered into and out of engaging relations with the said downward projections successively to rotate the said carrier, and a spring pressed stop adapted to engage the said outward projections on the carrier.

In testimony whereof we affix our signatures in presence of two witnesses.

WILLIAM A. PARTRIDGE.
WALTER L. HUMMEL.
CARL L. HUMMEL.

Witnesses:
E. M. FISHER,
F. C. MUSSUN.