No. 875,413. PATENTED DEC. 31, 1907.

D. M. DABOO.

ELECTRIC SIGNALING.

APPLICATION FILED JULY 17, 1905.

2 SHEETS—SHEET 1.

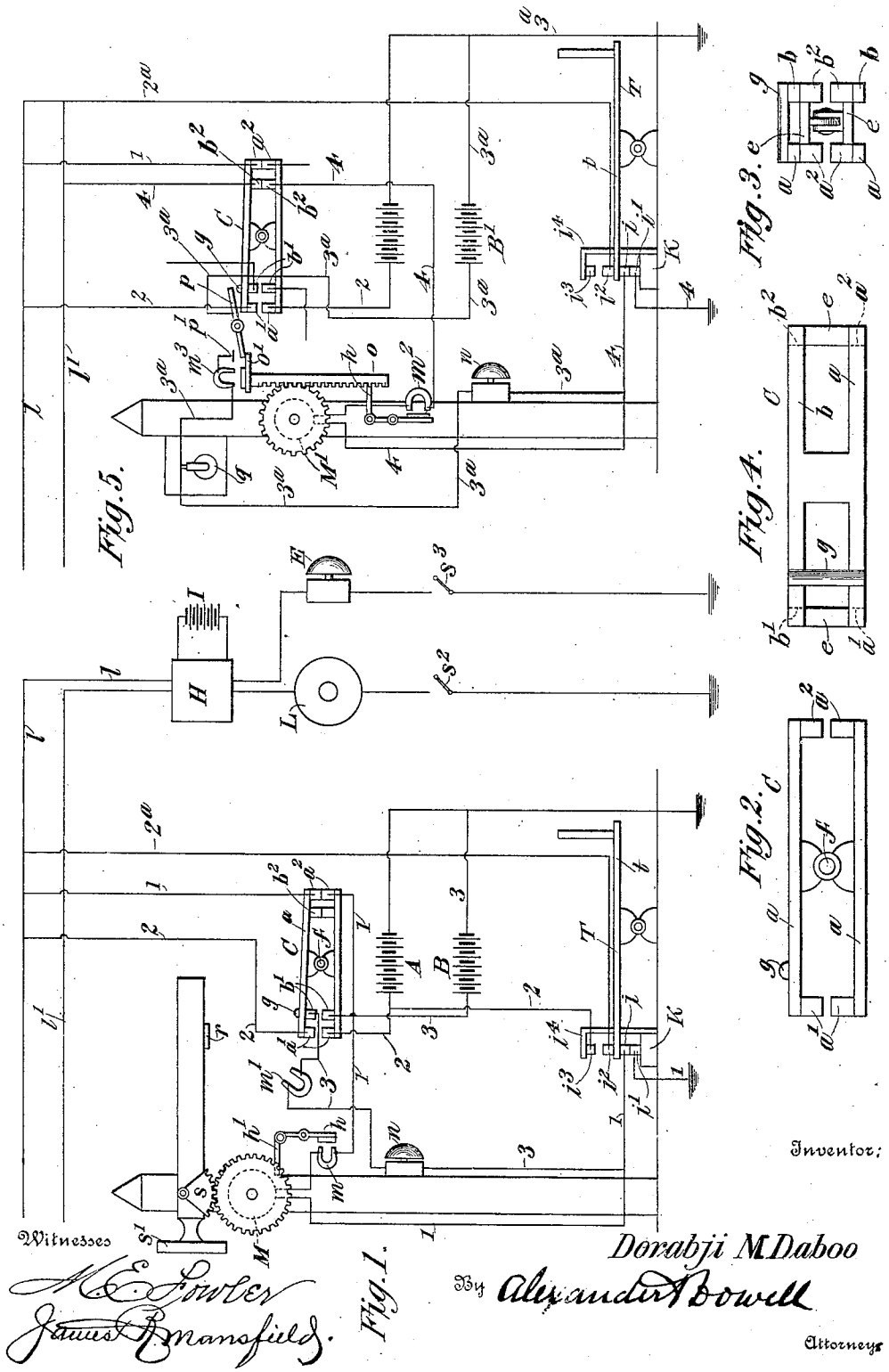

Witnesses

M. E. Fowler

James R. Mansfield.

Inventor;

Dorabji M. Daboo

By Alexander Bowell

Attorneys

THE NORRIS PETERS CO., WASHINGTON, D. C.

No. 875,413.

PATENTED DEC. 31, 1907.

D. M. DABOO.

ELECTRIC SIGNALING.

APPLICATION FILED JULY 17, 1905.

2 SHEETS—SHEET 2.

Fig. 7.

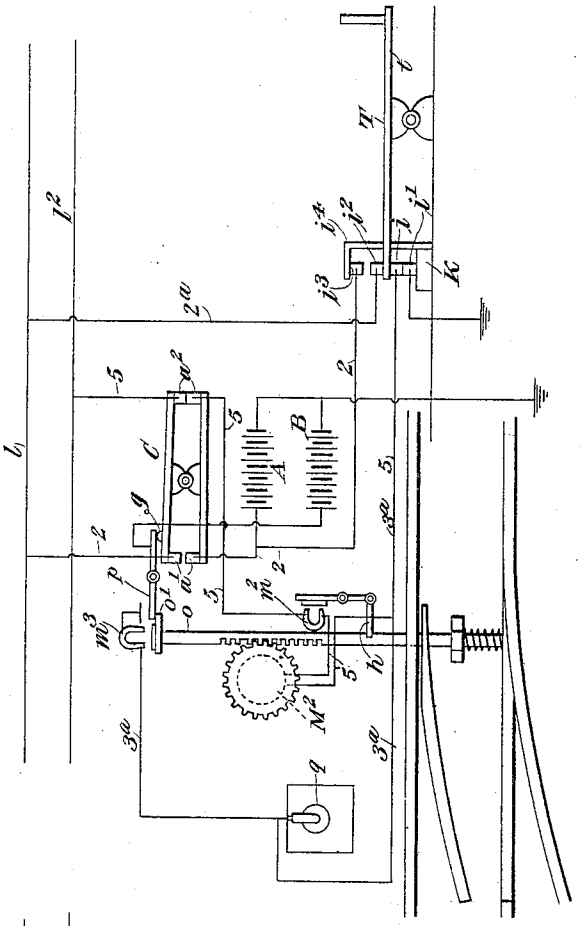

Fig. 6.

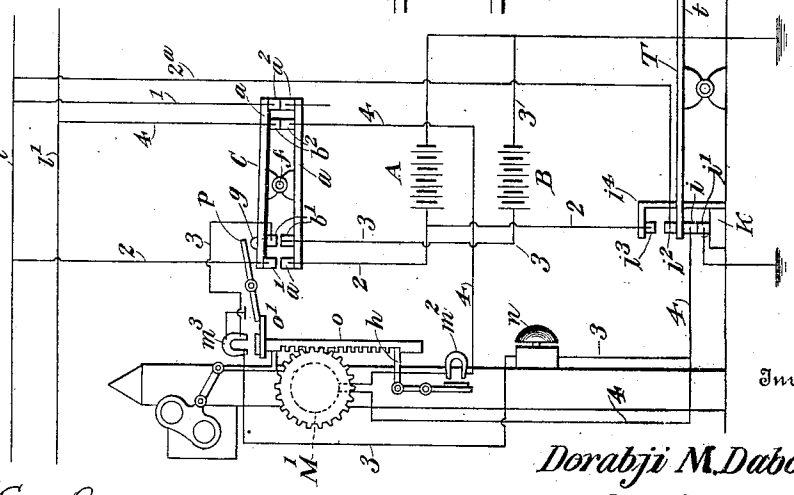

Witnesses

H. E. Fowler

James R. Mansfield.

Inventor:

Dorabji M. Daboo

By Alexander Bonnell

Attorneys

THE NORRIS PETERS CO., WASHINGTON, D. C.

UNITED STATES PATENT OFFICE.

DORABJI MERWANJI DABOO, OF BOMBAY, INDIA.

ELECTRIC SIGNALING.

No. 875,413. Specification of Letters Patent. Patented Dec. 31, 1907.

July 17, 1905. Serial No. 281,090.

To all whom it may concern:

Be it known that I, DORABJI MERWANJI DABOO, commercial agent, residing at No. 8 Bazaar road, Mahim, in the city of Bombay, India, have invented new and improved improvements relating to the electrical and automatic working of signals, points, and crossing-gates on railways.

The present invention is an improvement in electrical controlling apparatus for railway-signals and the like, and its principal object is to provide means whereby the controlling devices may all be electrically worked from one desired station to another irrespective of distance and to keep the station operator informed of the position of trains at any point under his control, thereby lessening risk of accident and dispensing with the necessity for intermediate signal stations as at present required.

The invention will be fully understood from the following description and the features for which protection is desired are set forth in the claims.

In the annexed drawings which illustrate my invention diagrammatically:—Figure 1 shows my invention applied to the electrical working of a semaphore signal. Figs. 2, 3 and 4 show the rocking commutator C in side and end elevation and plan. Fig. 5 shows the application of my invention to the working of the electric signal lamps. Fig. 6 shows the application of the same to the working of the signal lamp spectacles. Fig. 7 shows the application of the same to the electrical working of points.

Similar letters and numerals refer to like parts and circuits in all the figures.

Referring to Fig. 1 the axis of the semaphore arm carries a toothed sector *s*, with which meshes a pinion or cog wheel on the shaft of a suitable electric motor M. The said arm is counterbalanced by the weight s^1. C (see also Figs. 2, 3 and 4) is a rocking commutator comprising a pair of bars *a* carrying insulated contacts, a^1, a^2 at their ends; and a pair of bars *b*, carrying the insulated contacts *b*, b^2 at their ends. The upper bars *a*, *b* and the lower bars *a*, *b* are respectively connected together by insulating cross-bars *e*. The lower bars *a*, *b* are fixed; but the upper bars *a*, *b* rock on a pivot *f*; so that the pairs of contacts a^1, b^1, or a^2, b^2, may be brought together by the tilting of the upper bars. The said upper bars (hereinafter referred to as the rocker of the commutator) are so weighted or arranged as to normally tilt as shown in Fig. 1 bringing the pairs of contacts a^2 and b^2 together.

The commutator C is suitably supported in such a position that the semaphore arm when it falls or some part moving therewith will engage the striking piece *g* on the rocker, and tilt the same in the opposite direction; so as to bring the pairs of contacts a^1, b^1, into contact. In the drawings the bars *b* are shown of less length than bars *a*, but this is only for convenience of illustration, so that the contacts b^1, b^2, may be seen in the side elevation of the commutator. By means of the line wire 1 led from the station commutator H the current from the station battery I is transmitted along wire 1, to the upper contact piece a^2, and passes by way of lower contact piece a^2 and wire 1 to the electro-magnet *m* which it excites. The function of this latter is to attract an armature on a lever *h*; and so withdraw a catch or bolt h^1 of any suitable construction which locks the motor M against motion; thereby freeing the latter. From the magnet *m* the current passes to, and operates the motor to lower the semaphore arm; and leaving the motor, passes by wire 1 to a contact *i* carried by a train-operated switch T hereinafter described; passing from thence to earth through the contact i^1 carried by an insulated block K.

The semaphore arm in falling, hits the striking piece *g* of the rocker of commutator C, thus tilting it, in the reverse direction and bringing the pairs of contacts a^1, b^1 together. This breaks the motor operating circuit 1; and through contacts a^1 establishes a station indicator circuit 2, in which is the local battery A; which through the line wire 1, and the station commutator transmits current to a suitable indicator I, at the station, such as a moving colored disk bearing a number which by its movement shows the operator that the signal has been lowered. This circuit, like circuit 1 is completed through earth as shown. The earth connection of the indicator is broken, as by a switch s^2, when the current is passing to the motor through circuit 1 and is joined by the operator after the passage of such current.

Simultaneously another or locking circuit 3, in which is the local battery B, is completed through the contacts b^1, b^1. In this

circuit is the electric magnet m^1 and the bell n on the signal post. One of the earth connections of circuit 3 is made through the contacts of the train-operated switch T, before referred to. The function of the electric magnet, m^1 is to attract and hold the armature r on the semaphore arm; and thus prevent the same from flying up by reason of its counterpoise, when the motor operating circuit 1 is broken. Completion of circuit 3 thus locks the semaphore arm and rings the post bell n, though this bell may be dispensed with if desired.

The train-operated switch T comprises the rocking bar t so weighted or arranged that normally its contact i rests on contact i^1. By any suitable or well-known arrangement of levers, a passing train is caused to depress the right hand end of t sufficiently to bring the contact i^2 on the upper side of the bar t, against the contact i^3 carried by the insulated support i^4. Thus on a train arriving at the signal, the locking circuit 3 is broken, which releases the armature r permitting the semaphore arm to fly up, and stops bell n and at the same time the rocker of commutator C returns to its original position as shown; and breaks the station indicator circuit 2. Simultaneously the movement of the train-operated switch cuts local battery A into the alternative station bell circuit 2^a now completed through contacts i^2 i^3. Battery A now transmits current through line wire 1, and station commutator to the station bell E. The switch s^3 in the earth connection of this bell previously open, should be closed by the operator so soon as the indicator current ceases. Bell E continues ringing until the train has passed the switch T at the signal. So soon as the train passes this switch, the same returns to the position shown bringing i^1, and i^2 into contact again, and all is ready for the passage of current through the motor circuit 1, by completion of this circuit F at the station commutator H. If preferred in lieu of the switches s^2 s^3 in the earth connections of station indicator I and bell E the wires 2, 2^a connecting them with the station commutator H, may be connected up and disconnected or separate direct wires connecting them to be used from station.

The display of colored lights for night signals may be effected in the usual way by colored spectacles moved in front of the lamp lens by the semaphore arm, but I may provide for electrically working the lamp spectacles independently of the semaphore arm, or I may light an electric lamp, and automatically extinguish it by the arrival of a train.

I will now describe the means shown in Fig. 5 for signaling at night, by lighting and automatically extinguishing an electric lamp. It is to be understood that the rocking commutator C in this figure, is precisely similar to that shown in Fig. 1, and that the same commutator C will serve for both the semaphore arm and the lamp circuits.

By means of another live wire 1′ from the station commutator H current from the station battery is transmitted by wire 4, to upper contact b^2, and passes by way of lower contact b^2 and wire 4, to electro magnet m^2 whose function is similar to that of magnet m, viz:—to release a lock or bolt, h which in this case holds a bar o against longitudinal movement. From magnet m^2 the current passes to electric motor Ml^1 and from thence to earth, through the contacts i, i^1 of the train-operated switch. A toothed pinion or cog on the motor axle gears with rack teeth on the bar o. When current is passed to motor M^1, by circuit 4, the motor raises bar o and a striker o^1, extending therefrom contacts with one end of a lever p, causing the other end of same to engage the striking piece g of the rocker of commutator C, and tilt the same in the reverse direction; breaking circuit 4; and bringing contacts a^1 and b^1 together. The left hand end of lever p now meets the contact p^1 electrically connected with electro magnet m^3 and circuit 3^a in which is local battery B^1, is now completed through lever p. This lights the electric lamp q in the last named circuit, and also excites the electro magnet m^3 therein, which attracts and holds an armature on bar o, and prevents the latter from falling.

One of the earth connections of circuit 3^a is completed through the contacts i, i^1 of train-operated switch T, so that when a train arrives at the latter circuit 3^a is broken, at contacts i, i^1 and bar o, and commutator C return to their original positions. The working of the indicator I, and bell E, at station is effected by the making and breaking of circuits 2, and 2^a, as described with reference to Fig. 1. Circuits 3^a being completed independently of the commutator C, prevents waste of current by the lighting of the lamp in the day each time the semaphore is lowered.

When other than electric lamps are used I may operate the lamp spectacles independently of the semaphore, as shown in diagram Fig. 6. The arrangement is very similar to that just described except that the electric magnet m^3 is here placed in the locking circuit 3 (Fig. 1) and the lever p, does not act as a switch (as in Fig. 5) but merely performs the function of tilting the rocker of commutator C.

The electrical working of points, is effected in a similar manner to the electric working of signal lights just described with reference to Figs. 5 and 6.

In Fig. 7 current from the station battery is transmitted by line wire 1^2 from station commutator and wire 5 to motor releasing electric magnet m^2 and motor M^2 through

contacts a^2 of rocking commutator C. From the motor M^2 the circuit of 5 is completed to earth (exactly like circuits 1, 3 and 4) through a train-operated switch T, placed so far from the points that the longest train will have cleared the latter before reaching switch T. The bar *o* is moved longitudinally by the motor M^2 as in Figs. 5 and 6 but is here connected with the rail switches. The electric lamp *q* is lighted by completion through lever *p* of circuit 3^a wherein is also the electro magnet m^3 for holding bar *o* and which is also completed through the train-operated switch T as before described with reference to Fig. 5. The working of the station indicator and bell is also here effected by circuit 2 and 2^a opened and closed by the rocking commutator C and train-operated switch T as before described.

If other than electric lamps are used for the points, the movement of the latter may operate colored lamp screens in the usual manner, the electric lamp in circuit 3^a being dispensed with.

It is to be understood that I in no wise confine or limit myself to the precise construction and arrangement of parts shown in the annexed diagrammatic drawings, which may obviously be very considerably varied, without in any way departing from my invention.

Having now particularly described and ascertained the nature of the said invention and in what manner the same is to be performed I declare that what I claim is:—

1. In an apparatus for the electric working of signals and points on railways, an electric motor, a commutator which by the completing of the operation effected by the motor is actuated to break the motor circuit and establish a local battery circuit, an indicator in the local battery circuit located at the station, in combination with means for automatically locking the parts moved by the motor, and a train-operated switch which on the arrival of a train automatically breaks the station indicator circuit, and releases the locking means, the commutator and parts moved by the motor then returning to their original positions automatically as described.

2. In an apparatus for the electric working of signals and points on railways, an electric motor, a commutator which by the completing of the operation effected by the motor is actuated to break the motor circuit and establish a local battery circuit, an indicator in the local battery circuit located at the station, in combination with means for automatically locking the parts moved by the motor, and a train-operated switch which on the arrival of a train automatically breaks the station indicator circuit, and releases the locking means, a second local battery circuit controlled by the commutator and in which is arranged the means for automatically locking the motor-moved parts substantially as described.

3. In an apparatus for the electric working of signals and points on railways, an electric motor, a commutator which by the completing of the operation effected by the motor is actuated to break the motor circuit and establish a local battery circuit, an indicator in the local battery circuit located at the station, in combination with means for automatically locking the parts moved by the motor, and a train-operated switch which on the arrival of a train automatically breaks the station indicator circuit, and releases the locking means, whereby on the arrival of a train at the train-operated switch, a local battery circuit is also completed, which rings a bell at the station substantially as described.

4. The herein described apparatus for electrically operating the controlling devices on railways, comprising a motor and mechanical connections for operating the controlling mechanism, a main electrical circuit including said motor; two local battery circuits, a station indicator included in one local circuit, locking devices included in the other circuit; and means for making and breaking the main circuit and thereby opening or closing the local battery circuits.

5. In an electrically controlled signaling apparatus for railways, the combination of a signal, a motor for operating the same, a main electrical circuit including the motor, means at the station for closing said circuit, train controlled devices for automatically breaking this circuit, two local battery circuits, an indicator in one of the local battery circuits, and signal locking devices in the other local battery circuit, the local circuits being closed when the main circuit is broken, and being opened upon the arrival of the train at the train controlled devices; and means for restoring the circuits and their connections and adjuncts to normal condition when the train passes the said devices, substantially as described.

6. The herein described apparatus for electrically working the signals on railways, comprising a motor and mechanical connections for operating the signals, a main electrical circuit including the motor, two local battery circuits, a station indicator included in one local circuit, and locking devices included in the other circuit, a station switch for automatically breaking the main circuit and simultaneously closing the local battery circuits, and a train operated switch for automatically breaking the local battery circuits and closing the main circuits.

7. In electrical signaling apparatus for railways, the combination of a signal, a motor for operating the same, a main electrical circuit including the motor, means at the

station for closing said circuit, a train operated switch for automatically breaking this circuit, two local battery circuits, an indicator in one of the local battery circuits, and signal locking devices in the other local battery circuit, the local circuits being closed when the main circuit is broken, and being opened upon the arrival of the train at the train controlled switch; a third local bell circuit, means for closing said circuit when the locking circuit is broken, and means for restoring the circuits and their connections and adjuncts to normal condition when the train passes the train operating switch, substantially as described.

8. In combination for the purpose set forth, a motor, the rocking commutator C operated thereby, the train-operated switch T, and the circuits, 1, 2, 2^a and 3 with their connections and adjuncts arranged and adapted to operate substantially as described.

9. In combination for the purpose set forth, the motor, the rocking commutator C operated thereby, the train-operated switch T, and the circuits 1, 2, 2^a and 3^a with their connections and adjuncts arranged and adapted to operate substantially as described.

In testimony whereof I have signed my name to this specification in the presence of two subscribing witnesses.

DORABJI MERWANJI DABOO.

Witnesses:

RUSTAMJI MANCHERJI,
HORMUSJI RUSTOMJI.