(12) PATENT
(19) AUSTRALIAN PATENT OFFICE

(11) Application No. AU 200157790 B2
(10) Patent No. 778461

(54) Title
Oxygen cutting of slabs

(51)6 International Patent Classification(s)
B23K 007/10 B23K 037/047

(21) Application No: 200157790 (22) Application Date: 2001.08.06

(30) Priority Data

(31) Number	(32) Date	(33) Country
00202767	2000.08.04	EP

(43) Publication Date : 2002.02.07
(43) Publication Journal Date : 2002.02.07
(44) Accepted Journal Date : 2004.12.09

(71) Applicant(s)
Eon Holding S.A.

(72) Inventor(s)
Valerie Donze; Pascal Donze; Bertrand Donze; Thierry Rozot

(74) Agent/Attorney
PIPERS MILLS OAKLEY,PO Box 453,Collins Street West,VIC 8007

(56) Related Art
FR 2746686
EP 827920
EP 893372

ABSTRACT

The invention concerns a process for oxygen cutting of slabs by means of one or several oxygen cutting torches and a device for carrying it out.

The process consists of the steps of suspending the slab (16) by means of one or several electromagnets (14) separated from the slab (16) by non-magnetic means, carrying out a relative movement between the torches (18) and the slab (16) by way of transport means (15) acting on the slab on the same side of the slab (16) as said electromagnet (14), and setting in operation said torch (19) to cut the slab (16) during its passage in front of the torch (18).

P/00/011
Regulation 3.2

AUSTRALIA

Patents Act 1990

COMPLETE SPECIFICATION

Invention Title: Oxygen Cutting of Slabs

The following statement is a full description of this invention, including the best method of performing it known to me:

The invention concerns a process of oxygen cutting of slabs and a device for carrying out the process.

It is usual to oxygen cut slabs of large dimensions originating from the continuous casting operation to make smaller slabs corresponding to the specific rolling programmes.

Large slabs, called mother slabs, can be cut:

a) longitudinally by an operation called splitting into x slabs of the same length;

b) longitudinally by an operation called side trimming to eliminate defects (edge defects); and

c) Transversely by an operation called parallel cutting.

These oxygen cutting operations involve much handling, nuisance effects, and very expensive work areas because they are equipped with significant handling, civil engineering and solid support means, requiring concentration of these jobs in dedicated oxygen cutting work areas.

The carrying out of oxygen cutting work placing the slabs to be cut in different ways, is known:

- placing the slabs flat on fixed supports with mobile torches

- placing the slabs flat or on edge and moving over a conveyor with fixed torches.

All the existing solutions adopted to date throughout the world are subject to inconveniences (slag, fumes), structural support costs and especially the lifting of cables, etc.

The object of the present invention is to minimise the difficulties described above.

According to the invention, this object is attained by the characteristics of the process of oxygen cutting in accordance with the device for carrying out said process as described in

the independent claims. Some means of implementing the invention are described in the dependent claims.

In brief, the process of oxygen cutting slabs according to the invention consists of suspending the slab to be cut by electromagnets from bearer means, such as a semi-lifting crane, lifting crane or rolling bridge or a device especially conceived, to displace the slab, which is suspended against motorised rollers or any other drive means, in front of fixed torches and nozzles (for deflashing, granulation, and extraction purposes) of an oxygen cutting apparatus, distributed on either side of the slab.

For slabs placed flat, the torch(es) is/are bent and positioned under the slab. They cut from bottom to top to allow easier positioning for deflashing, granulation and extraction. Equally, the position can be the inverse.

For slabs placed vertically, the placement of the torches and systems (deflashing, granulation, extraction) is easier and monitoring is simpler.

This system can be adapted to existing handling means in the factory, as it can be specially built above a slab yard so that it can handle and cut the slabs at the same time.

It can be envisaged that machines with slabs suspended vertically by the edge offer very easy access from both sides for cutting and deflashing, but equally the treatment of slabs in horizontal position with bent torches allows cutting from bottom to top so as to easily position the slag granulation and extraction devices.

The principle of positioning the slab in magnetic suspension on its edge allows the treatment of distorted slabs. The basis of the dimensions of the slab is constant (right tangent to the rollers) thus allowing these to be included in the programme of oxygen cutting and positioning of torches, deflashing equipment, etc. without risk of error nor lost time.

The operating principle allows oxygen cutting work to be carried out in a very productive manner, because there is no non-productive time for each handling operation, cleaning, etc. The provision of slabs to be cut and the removal of cut slabs is carried out during production

time. As opposed to all other known installations, there is no halt in production for cleaning the work area because of the increased accessibility which avoids the formation of flashings and allows the removal of slag as and when it is produced.

The invention will now be described by means of the non-limiting examples represented in the drawings attached, in which:

Figures 1A and 1B are schematic representations in elevation and in vertical projection respectively, of one means of carrying out the invention showing oxygen cutting of a slab in horizontal position;

Figures 2A and 2B are schematic representations in perspective and in vertical projection respectively, of another means of carrying out the invention showing oxygen cutting of a slab in vertical position; and

Figure 3 is a schematic representation of a more complete installation for oxygen cutting slabs according to the invention by means of the example of a slab in horizontal position; and

Figure 4 is a representation of the handling of a slab from its horizontal storage position into the vertical work position.

Figure 1 represents a means of oxygen cutting of slabs in horizontal position according to the invention. A bearing structure 10 in the form of posts 11 and rails 12 has a bearing component 13 from which electromagnets 14 and motorised drive rollers 15 for the slabs are suspended by cables, jacks or other means. The rollers 15 alternate with the electromagnets 14. The slab 16 is carried by one or several electromagnets 14 in service, its position following the length of the path of travel indicated by an arrow 17. The motorised rollers 15 contact the slab 16 and rotate to move the slab 16 by friction. The motorised rollers 15 can also be magnetised by a permanent magnet or a variable electromagnet (not shown).

On its work path indicated by the arrow 17, the slab 16 passes between an oxygen cutting torch 18, bent in Figure 1, and a device 19 for the extraction of fumes and slag and/or

deflashing. If the device has the three functions, finished portions of slab are obtained when the slab 16 has completely passed in front of the torch 18.

As necessary, that is to say depending on the width of the pieces of cut slab, two or more of the torches 18 and devices 19 can be used.

Figures 2A and 2B represent in schematic fashion in perspective and in elevation the oxygen cutting of a slab 16 in vertical position suspended by electromagnets 14 and moved by motorised rollers 15 in the direction of the arrow 17. The slab 16 in vertical position passes between the torches 18 and the devices 19 for the extraction of fumes, slag and flashes.

For both means of transporting the slab 16, that is to say in the horizontal or flat position and in the vertical position, the co-operation between he electromagnets 14 and the motorised rollers 15, that is to say the positioning of the motorised rollers 15 in such a way that a gap of air is formed between the surface of the electromagnet and the contiguous face of the slab 18, allows easy movement of the slab 16 in the direction of the arrow 14.

Figure 3 represents in schematic fashion a complete installation for the oxygen cutting of slabs, the cutting structure or zone 10 at the centre, the feed unit 20 of the slabs 16 at the top, and the extraction unit 21 of the slabs 16 below.

The feed unit 20 consists of a wagon 22 moving in the direction of the double headed arrow 23 to bring the slabs 16 to be cut and a unit 24 for supporting and transporting the slabs 16, to the oxygen cutting zone 10. This unit 24 consists of electromagnets 14 and motorised wheels 15 alternating along the direction of travel towards the oxygen cutting zone; all this being similar to the electromagnets and rollers described in relation to Figure 1.

The unit 21 for extraction of the slabs 16 also consists of a wagon 25 moveable in the direction of the double headed arrow 27 for the transport of the cut slabs 16A, 16B (sic), and a unit 26 for supporting and transporting the slabs 16 out of the oxygen cutting zone. This unit 26 (sic) also consists of electromagnets 14 and motorised rollers 15, as in unit 24, alternating along the direction of travel to transport the cut slabs out of the oxygen cutting zone.

If the slabs 16 are cut in the vertical position, the slabs 16 to be cut can be stacked in the feed unit 20 on a wagon drawing the edge 28 of the top slab 16 of the pile of slabs stacked on the wagon under the electromagnets 14 which, in service, straddle the edge 28 of the top slab 16.

The electromagnets 14 move upwards while the wagon moves laterally following a programmed movement based on the upward movement of the electromagnets 14. This allows the slab 16 to be lifted and pivoted on its edge 28 to obtain the vertical position ready for oxygen cutting. The operation continues in the identical manner to that which has just been described for the slab in vertical position. In the extraction unit, the placement of cut slabs 16 on a stack takes place in the inverse sequence of the intake movements represented by figure 4. The lifting of slabs described could equally be realised maintaining the stack of slabs 16 immobile, and moving laterally the unit 24 for supporting and transporting the slabs 16 and electromagnets 14 until the electromagnets 14 are located at the edge of the top slab 16 of the stack of slabs. The lifting operation then takes place by a lateral movement of the unit programmed on the vertical movement of the electromagnets 14.

THE CLAIMS DEFINING THIS INVENTION ARE AS FOLLOWS:

1. Process for oxygen cutting of slabs by means of one or several oxygen cutting torches, including the stages of suspending the slab 16 by means of one or several electromagnets 14 separated from the slab 16 by non-magnetic means, carrying out a relative movement between the one or several torches 18 and the slab 16 by way of transport means 15 acting on the slab from the same side of the slab 16 as said electromagnet 14, and setting in operation said one or several torches 18 to cut the slab 16 during its passage in front of the one or several torches 18.

2. Process for oxygen cutting according to Claim 1, wherein said transport means 15 is at least one motorised roller, for contacting the slab 16, with its axis perpendicular to the direction of travel of the slab.

3. Process of oxygen cutting according to Claim 1 or 2, wherein said non-magnetic means is air.

4. Process of oxygen cutting according to Claim 2 or 3, wherein said at least one motorised roller 15 are magnetised.

5. Process of oxygen cutting according to Claim 2 or 3, wherein said motorised rollers 15 are electromagnets.

6. A device for carrying out the process according to Claim 1, including a structure 10 for bearing the slab 16 and at least one oxygen cutting torch 18, wherein one or several electromagnets 14 attached to said bearing structure 10 and aligned in the direction of travel of the slab 16 allow the suspension of a slab above the ground, one or several motorised rollers 15 disposed in the direction of travel of the slabs 16 with their axes perpendicular to said direction of travel to contact with said slab 16 in order to move same in front of said torch 18, and a non-magnetic means adjacent to each electromagnet 14 and maintaining a certain distance between the electromagnetic 14 and said slab 16.

7. Device according to Claim 6, wherein a deflashing means is positioned opposite the at least one oxygen cutting torch 18, the slab 16, in use of the

device being interposed during the oxygen cutting operation between said deflashing means and said torch 18.

8. Device according to Claim 6 or 7, wherein a slab granulation means is positioned opposite the at least one oxygen cutting torch 18, the slab 16 in use of the device being interposed during the oxygen cutting operation between said granulation means and said torch 18.

9. Device according to one of Claims 6 to 8, wherein a fume extraction means is positioned opposite the at least one oxygen cutting torch 18, the slab 16 in use of the device being interposed during the oxygen cutting operation between said extraction means and said torch 18.

10. Process for oxygen cutting of slabs, substantially as hereinbefore described with reference to the examples and/or drawings.

11. Device for carrying out the process according to claim 1, substantially as hereinbefore described with the reference to the examples and/or drawings.

EON HOLDINGS S.A.
By their Attorneys
PIPERS MILLS OAKLEY

DATED this 6th day of August 2004

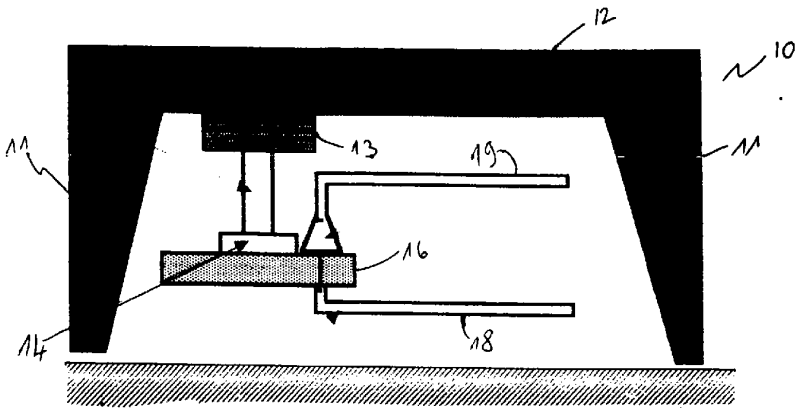
12
10
11
11
13
19
16
14
18

Fig. 1A

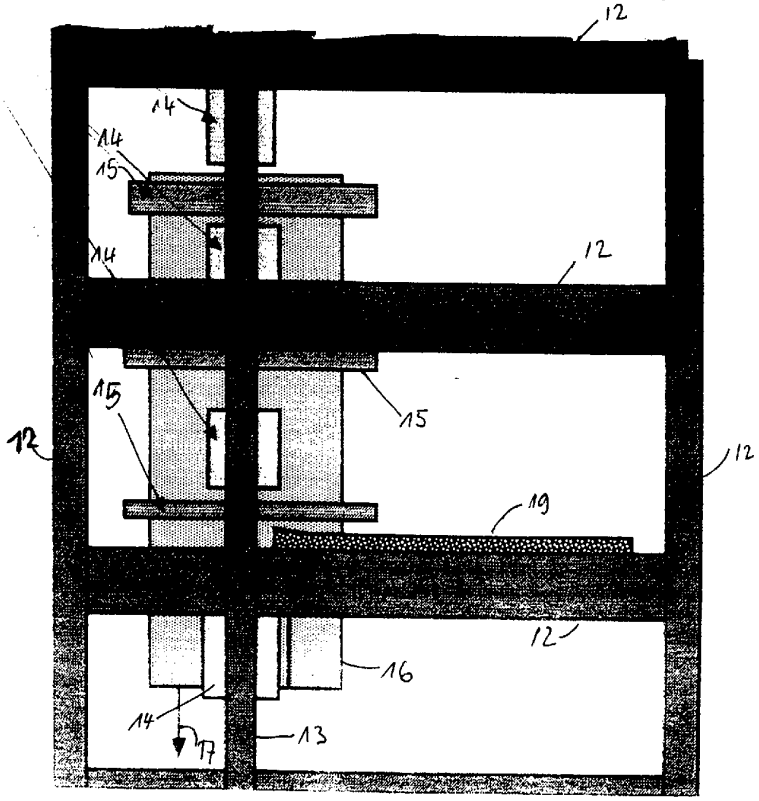
12
14
14
15
14
12
15
15
12
12
19
12
16
14
17
13

Fig. 1B

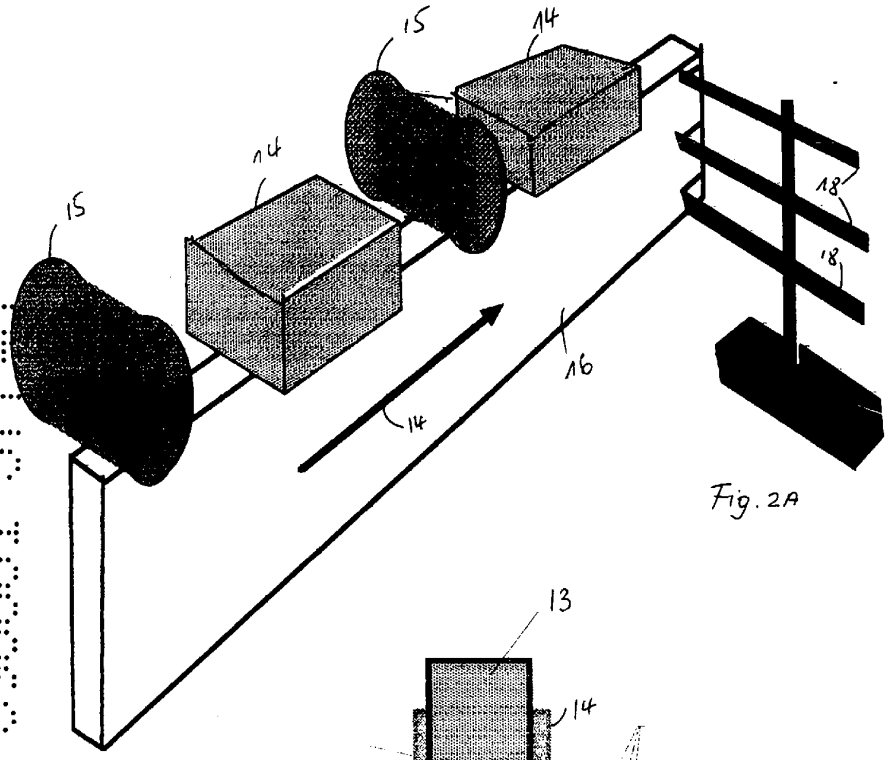

Fig. 2A

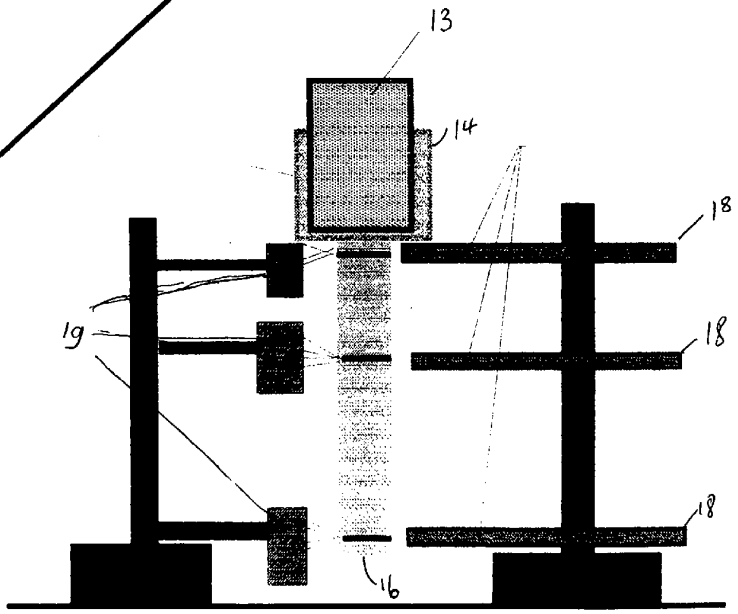

Fig. 2B

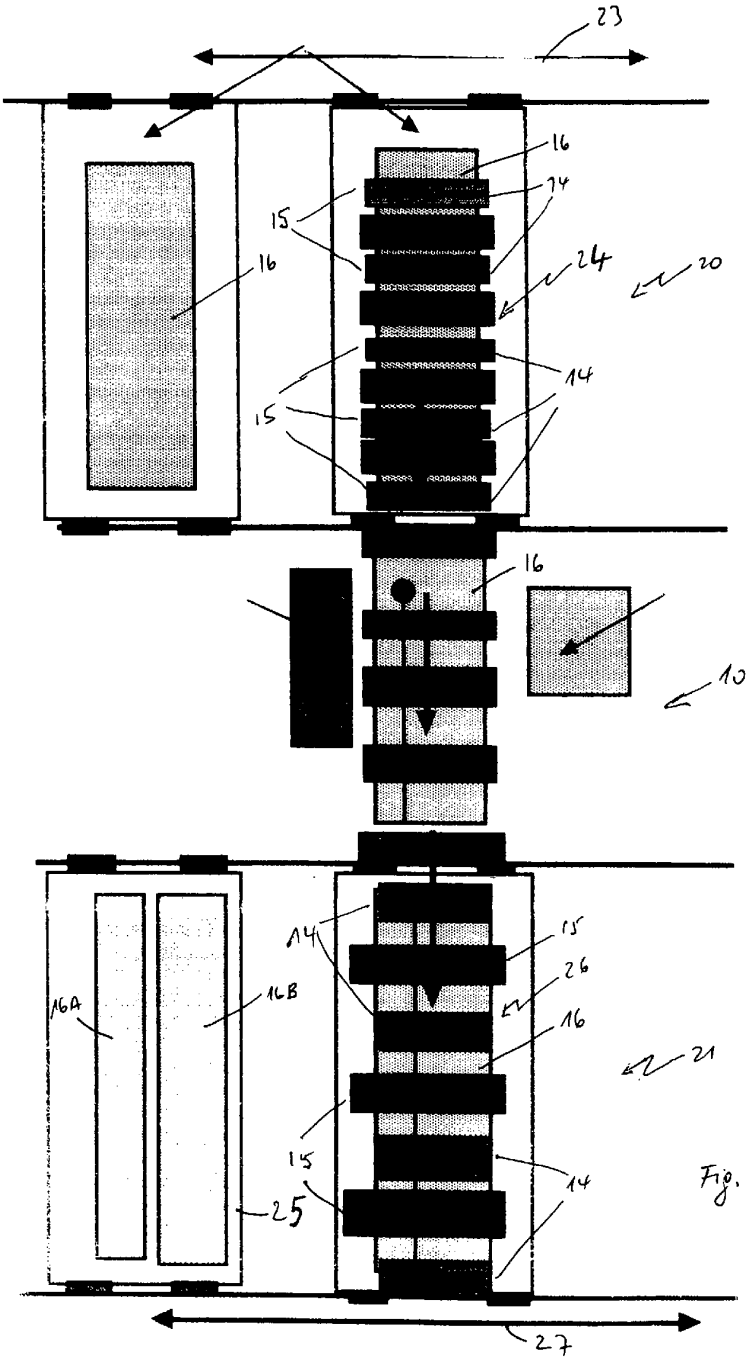

Fig. 3.

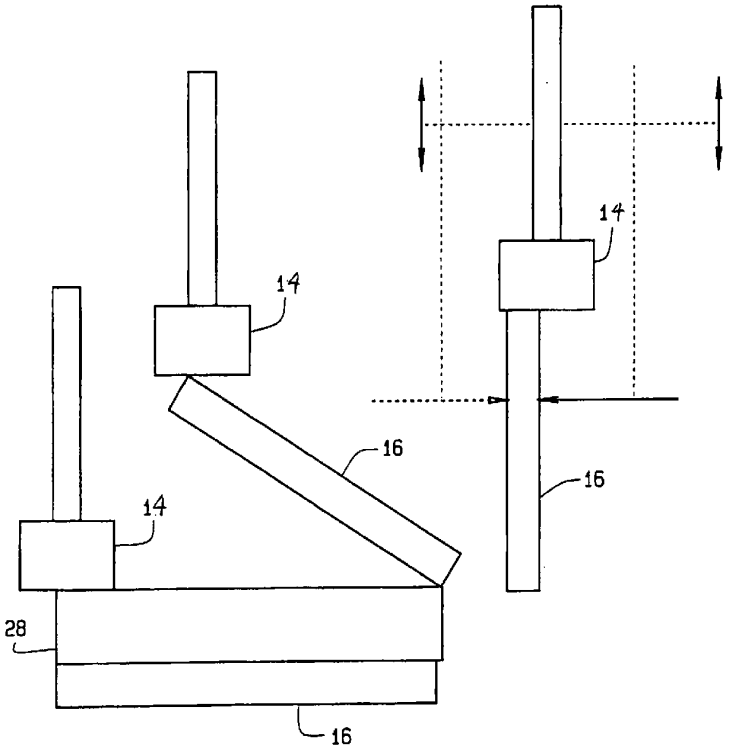

FIG. 4