H. HUGHES.

TUFT PILE FABRIC LOOM.

APPLICATION FILED FEB. 9, 1920.

1,362,625.

Patented Dec. 21, 1920.

4 SHEETS—SHEET 1.

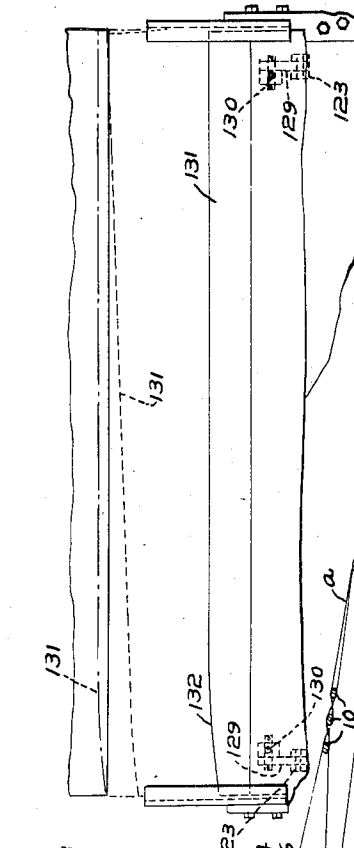

Fig. 2

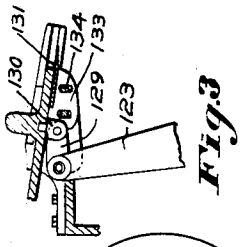

Fig. 3

Fig. 1

Inventor,
Harry Hughes
By Robt. D. Harris
Attorney

H. HUGHES.

TUFT PILE FABRIC LOOM.

APPLICATION FILED FEB. 9, 1920.

1,362,625.

Patented Dec. 21, 1920.

4 SHEETS—SHEET 2.

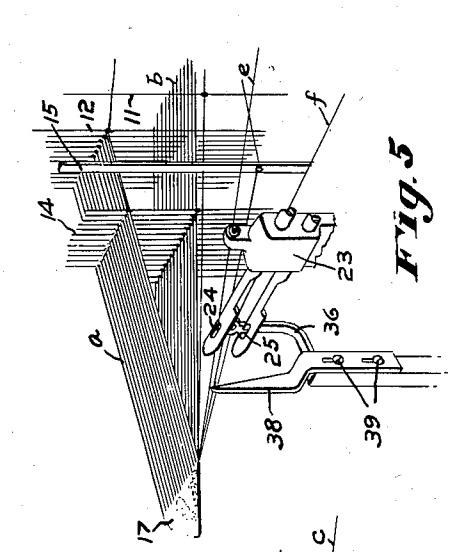

Fig. 5

Fig. 4

Inventor:
Harry Hughes
By Robt. O. Harris
Attorney

H. HUGHES.

TUFT PILE FABRIC LOOM.

APPLICATION FILED FEB. 9, 1920.

1,362,625.

Patented Dec. 21, 1920.

4 SHEETS—SHEET 3.

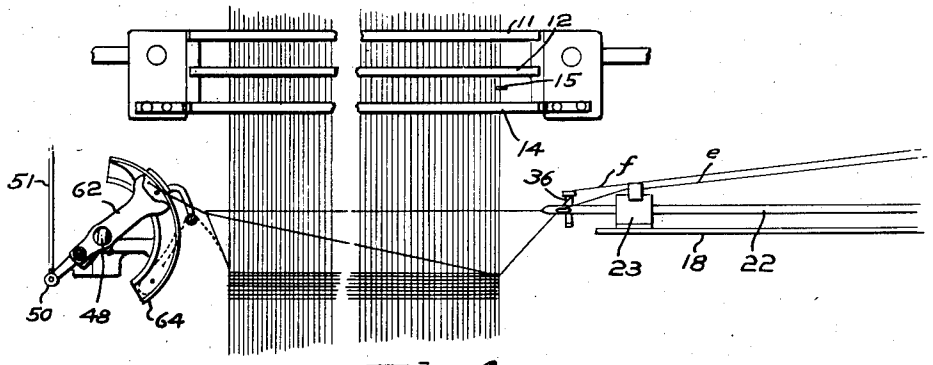

Fig. 6

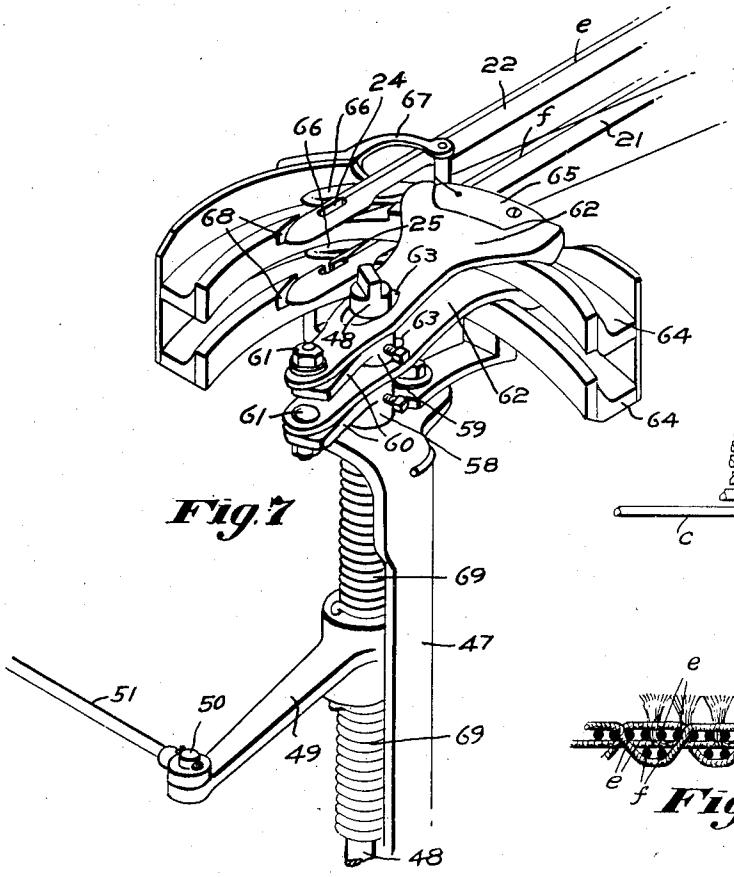

Fig. 7

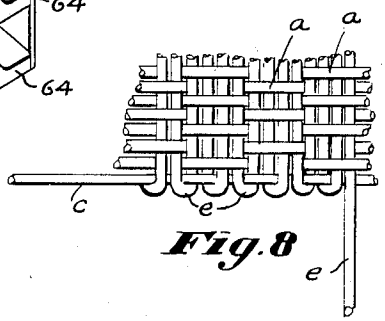

Fig. 8

Fig. 9

Inventor:
Harry Hughes
by Robt. P. Harris.
Attorney

H. HUGHES.

TUFT PILE FABRIC LOOM.

APPLICATION FILED FEB. 9, 1920.

1,362,625.

Patented Dec. 21, 1920.

4 SHEETS—SHEET 4.

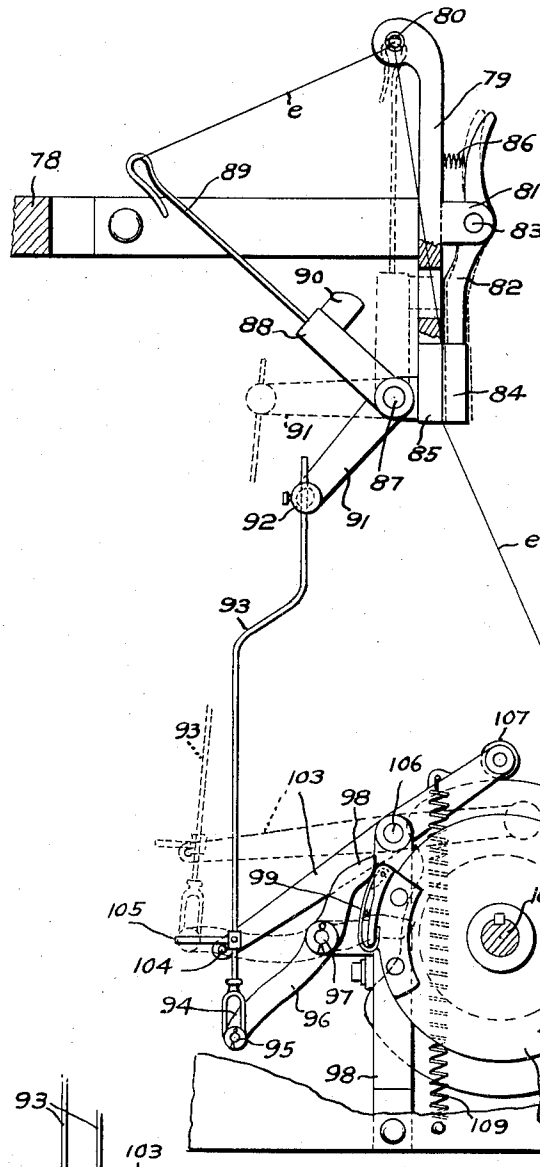

Fig. 10

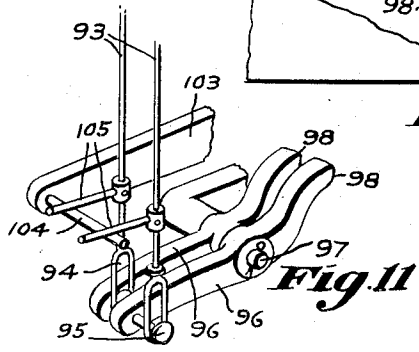

Fig. 11

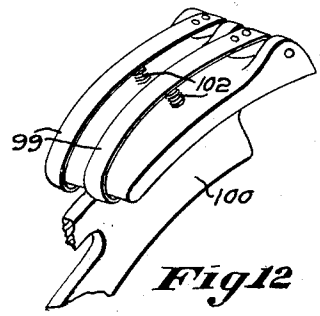

Fig. 12

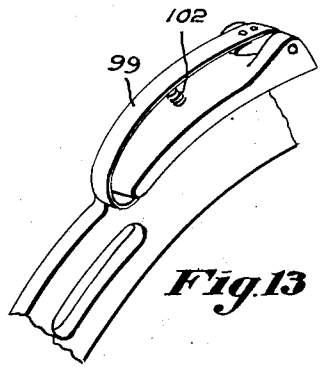

Fig. 13

Inventor:
Harry Hughes
By Robt. P. Hains
Attorney

UNITED STATES PATENT OFFICE.

HARRY HUGHES, OF SAXONVILLE, MASSACHUSETTS, ASSIGNOR TO ROXBURY CARPET COMPANY, OF BOSTON, MASSACHUSETTS, A CORPORATION OF MASSACHUSETTS.

TUFT-PILE-FABRIC LOOM.

1,362,625. Specification of Letters Patent. Patented Dec. 21, 1920.

Application filed February 9, 1920. Serial No. 357,148.

To all whom it may concern:

Be it known that I, HARRY HUGHES, a citizen of the United States, and a resident of Saxonville, county of Middlesex, and State of Massachusetts, have invented an Improvement in Tuft-Pile-Fabric Looms, of which the following description, in connection with the accompanying drawings, is a specification, like characters on the drawings representing like parts.

This invention relates to looms and more particularly to looms for weaving tufted pile fabrics such, for instance, as Moquette carpets or rugs or other types of fabrics in which the pile forming yarns are passed about weft threads in the body of the fabric with their ends projecting to form the tread surface.

In this general type of loom, the tuft yarns are usually carried on spools which are mounted upon suitable chains or carriers, and yarns are taken from these spools by presenting devices and passed about weft threads which form part of the body of the fabric, and then the tuft yarns are cut or trimmed by suitable knives operating at a distance above the body of the fabric.

The present invention has more special reference to improvements in this general type of loom whereby the productive capacity of the loom is increased, the construction of the various parts is simplified, and the efficiency in operation is increased.

One of the important features of the present invention consists in simultaneously operating two needles, one of which always carries a weft thread, and the other of which is threaded with a weft thread on every other excursion of the needles so that the needles, while acting simultaneously, introduce two threads on one inserting movement and a single thread the alternate inserting movement. In connection with such actuation of the needles two selvage shuttles are employed at one side of the loom to interloop with the needle or weft threads a selvage or shuttle thread, and these shuttles are preferably actuated yieldingly in their advancing or interlooping stroke in order to prevent breakage of parts should any obstruction of their movement occur. At the opposite edge of the cloth, the selvage is formed by a selvage thread which is controlled by a suitably operated heddle.

Another important feature of the present invention consists in the slack thread take-up which is associated with each of the needles. In carrying this feature of the invention into practical effect the two take-up devices, one for each of the needles, are operated to take up the slack in the associated thread on the withdrawal of the needles from the shed, and at such times a clamp is employed for holding each of the threads during the take-up action of the take-up devices. As the needles pass into the shed, it is desirable that the clamps be released and the take-up devices be moved to inoperative position, and an important feature of the invention in this respect consists of means operative as the needles advance into the shed to move the take-up devices to an inoperative position and release the clamps, so that the needle or weft threads may be readily withdrawn from the source of supply.

A novel characteristic with respect to the take-up mechanism is the provision of a single means for returning or lifting the take-up devices into their inoperative position simultaneously and effecting, through such movement, the release of the clamping means.

The tuft yarn spools and their carriers, and the mechanism for operating them, and also the devices for inserting and separating the tufts, are not shown in the present drawings, nor is it necessary to describe these parts because they form no part of the present invention and, moreover, such parts are well known by those skilled in the art. The knives for cutting or trimming the tuft yarns, in the present instance, however, have novel characteristics, and an important feature of the invention in this respect consists in moving one of the knives throughout its length simultaneously to the cutting point, and moving the associated knife differentially, that is, moving one cutting edge in advance of the other so that a progressive or shearing cut of the tufts of yarn takes place from one side of the cloth to the other.

In addition to the above, various other novel features of the invention and combination of parts will be hereinafter described in connection with the accompanying drawings which show one good practical form of the invention.

In the drawing:

Figure 1 is a sectional side elevation of a tuft pile fabric loom, some of the parts be-

ing omitted and having the present invention associated therewith;

Fig. 2 is an enlarged plan view showing the cutting knives and their relative movements;

Fig. 3 is a sectional detail showing the mounting at one side of the front or guillotine knife;

Fig. 4 is a perspective view at the needle side of the loom, only such parts being illustrated as are necessary to make clear the construction and mode of operation and showing a double shed formation;

Fig. 5 is a detail perspective view showing the single shed formation and one of the needles inserting a weft thread while the other works idly;

Fig. 6 is a diagrammatic plan view showing the interlooping of the needle or weft threads and the shuttle or selvage threads:

Fig. 7 is an enlarged detail in perspective showing the shuttles and the actuating means therefor;

Fig. 8 is an exaggerated plan view showing the relation of the warp and weft threads.

Fig. 9 is a section of the fabric produced by the present loom and showing the tuft yarns held in place;

Fig. 10 is an enlarged detail in side elevation showing the take-up mechanism;

Fig. 11 is a detached detail of certain parts of the take-up mechanism;

Figs. 12 and 13 show the yielding cam shoes for actuating parts of the take-up.

The loom frame may be of suitable construction for supporting the operating parts and comprises the side frames 1 tied together with suitable cross ties 2. Supported upon suitable brackets 3, 4, at the rear of the loom are bearings for supporting the stuffer and binder warp beams, the former being indicated at 5 and the latter at 6. Also mounted upon the bracket 7 extending from the loom frame is the beam 8 for the selvage thread. The binder warp threads *a* from the beam 6 pass frontwardly about the tension rolls 9 over and under the lease rods 10 and through the harnesses 11 and 12 which may be actuated by suitable operating mechanism as usual in this class of looms. The means for actuating the binder warp harnesses 11 and 12 form no part of the present invention and the construction and mode of operation therefore of such means is not herein illustrated.

The stuffer warp threads *b* pass about suitable guiding and tension rods 13, Fig. 1, and then through a stationary or fixed harness 14, the construction being such that in the formation of the sheds the binder warps are raised and lowered relatively to the fixed stuffer warps.

The selvage thread *c* passes from the beam 8 directly through the selvage thread heddle 15 which is raised and lowered through mechanism that will hereinafter be described.

The various warp threads so far described pass forward through the usual reed 16 and are united at the fell of the cloth 17, Fig. 4, the construction being such that upon proper manipulation of the shedding mechanism either an upper and lower or double shed, as illustrated in Fig. 4, or a single shed, as illustrated in Fig. 5, may be formed for the introduction of the weft or needle threads.

The reed 16 may be appropriately operated, as is common in this class of looms in order to beat up the weft threads to the fell of the cloth, but since such operating mechanism forms no part of the present invention its illustration is not deemed necessary on account of the complication incident to its being shown in the present drawings.

Mounted at one side of the loom is the needle supporting bar 18, Fig. 4, on which is mounted to slide the sleeve or block 19. The bar and the sleeve may be provided with a dove-tail connection as illustrated in Fig. 4 to maintain them in proper operating relation as the sleeve 19 reciprocates longitudinally of the bar. Rising from the sleeve 19 is the needle clamp or holder 20 provided with suitable securing means for two needles 21 and 22 which are arranged in a vertical plane relative to each other. At the end of the supporting bar 18 adjacent the loom side is the needle guide 23 suitably provided with openings for the reciprocation of the needles 21, 22 therein, the construction being such that upon movement of the sleeve 19 the two needles 21 and 22 will be simultaneously moved transversely of the loom or through the shed or sheds which may be formed by the warp threads.

The needle 22 is provided with a closed eye 24 while the needle 21 is provided with an open or hooked eye 25 for a purpose that will presently appear.

The sleeve 19 is connected by a link 26 to an operating member 27 which is given a swinging movement transversely of the loom by suitable means. The means for swinging the operating arm 27 forms no part of the present invention, except in so far as it serves to move the sleeve 19 and the attached needles transversely of the loom, and such operating means for the arm 27 is not, therefore, further illustrated.

From the character of fabric to be produced by the present loom as shown by Figs. 8 and 9, it will be apparent that the needles 21 and 22 will introduce weft or needle threads in an upper and lower shed when the binder warps are raised and lowered to opposite sides of the relatively stationary stuffer warps, and that when the binder warps *a* form a single shed above the stuffer warps *b*, only one of the needles will intro-

duce a weft or needle thread, and that such single weft or needle thread constitutes the holding thread for the tuft yarns *d*, Fig. 9.

It will now be apparent why one of the needles 22 has a closed eye and the other needle 21 has an open eye, means being provided to supply the open eye needle 21 with a weft or needle thread on alternate inserting movements of the needles. The needle 22 has threaded through its closed eye 24 the weft or needle thread *e* which is drawn from a suitable source of supply, and the open eye needle 22 is provided with its weft or needle thread *f* on each alternate inserting movement of the needles, as will presently appear.

Pivotally mounted on the loom frame at 28, Fig. 1, is the arm 29 carrying a roller 30 which is engaged with the peripheral portion of a cam 31 mounted on the cam shaft 32. The arm 29 extends upwardly and passes through a guide 33 on the loom frame and between such guide and a collar 34 on the upwardly extending portion of the arm 29 is interposed a spring 35, the tendency of which is to maintain the roller 30 in constant engagement with its operating cam. Secured to or formed as part of the arm 29 on its upper portion, is the weft thread carrier 36, Fig. 4, through the eye 37 of which the weft thread *f* is passed. The form and timing of the cam 31 is such that on each alternate movement of the needles the needle carrier 36 will be actuated to place the needle thread *f* in the open eye 25 of the needle 21 so that on one excursion of the needles both will carry a weft or needle thread for insertion in the upper and lower sheds, as indicated in Fig. 4, and on the next following excursion only one of the needles will carry a thread for insertion in the single shed, as indicated in Fig. 5.

Since the needles enter the shed at the side of the loom and at a point remote from the fell of the cloth, there is some liability of the previously beaten up weft thread or threads being pulled by the needles, and to obviate this the arm 29 is provided with a finger or hook 38, Fig. 4, which is projected upwardly at suitable times to engage the threads opposite the open part of the shed and hold the loop of the threads while the needles pass the thread or threads into the shed. The finger 38 may be adjustably secured to the rod 29 as by the screw and slot connections 39, Fig. 4.

To further insure that the weft threads at the selvage of the cloth adjacent the needles shall not be drawn backward from the point of beat-up or fell of the cloth as the needles perform their function of introducing the weft or needle threads, the present invention provides an arm 40, Fig. 4, pivotally mounted at 41 on the support 42 secured to and extending rearwardly relative to the loom frame. The arm 40 has a hook 43 which, when the arm 40 is in a raised position, as will presently appear, is substantially in line with or slightly at the rear of the fell of the cloth adjacent the selvage, the construction being such that when the arm 40 and its hook 43 are raised in operative position, the hook 43 will engage the weft or needle threads adjacent the selvage and fell of the cloth and prevent the pull upon the weft or needle threads from disturbing the previously formed selvage or drawings backwardly the weft or needle threads.

The arm 40 has pivotally connected thereto at 44 the upper end of a rod 45, the lower end of which is pivotally connected at 46 with the previously described arm 29, the construction being such that the arm 40 will be periodically raised and lowered to engage and release the weft or needle threads at the selvage of the cloth adjacent the fell. From the construction thus far described it will be apparent that when a single shed is formed, as indicated in Fig. 5, the finger 38 will be raised and will engage the weft or needle thread *e* and hold the loop thereof at the selvage while the tuft yarn is placed about such thread, and at this time also the hook 43 will be placed in position to prevent injury or disturbance of the previously beaten up weft at the selvage of the cloth adjacent the fell. When, however, a double shed is formed, as indicated in Fig. 4, both of the needles 21 and 22 will carry a thread.

In order to form the selvage of the cloth at the side opposite the needles, the present invention provides selvage shuttle mechanism which is best indicated in Figs. 6 and 7. Secured to the loom frame is the bracket 47 in which is mounted the rock shaft 48 having secured thereto the operating arm 49 which is connected at 50 to a link 51. The link 51 is jointed at 52 to the rocker arms 53, Fig. 1, pivoted to the loom frame at 54 and having a roll 55 which bears upon the periphery of a cam 56 secured to the cam shaft 57, the construction being such that as the cam 56 is rotated, the arm 53 will be actuated to turn the rock shaft 48 through the described connections.

Mounted upon the rock shaft 48 are the collars 58 and 59 each of which carries a side extension 60 to which is adjustably pivoted at 61 the selvage shuttle operating members 62. The members 62 are each provided with a slot 63 and the pins 61 adjustably connect the ends of the members 62 with the bar 60, the construction being such that the shuttle operating member 62 may be properly adjusted on and with relation to the operating means.

The shuttle race-ways 64 are similar and provide guiding means for the two shuttles 65, only one of which is shown in Fig. 7.

Each of the shuttles has a pointed end 66 which serves to guide the shuttle between the needles 21 and 22 and their respective threads. The shuttles 65 fit loosely in the shuttle operating member 62 and the threads, through the loop of which the shuttles pass, travel between the shuttle and the seat in the operating members as the latter move the shuttle in interlooping movements. In order that the ends of the needles may be guided into proper relation with the advancing ends 66 of the shuttles, the raceways 64 are provided with the guides 67 through which the needles respectively pass, and the ends of the needles when in advanced position, rest against the staying surface 68, Fig. 7, thereby insuring a more accurate interlooping of the weft and shuttle threads and avoiding injury to the needles should the end of the shuttle accidentally come in contact with the side of the needle.

In order that the advancing movement of the needles may be made yieldingly, the cam 56 is formed as an open or peripheral cam and the roll 55 is held against the periphery of the cam by the springs 69 which encircle the shaft 48, Fig. 7, and secure a yielding movement to the shuttles to avoid injury thereto should their movement be unduly obstructed.

To form a selvage along the opposite edge of the cloth, the present invention provides the selvage heddle 15, hereinbefore referred to. The selvage heddle 15 has the single eye for the passage of the selvage thread *c* and extends upwardly into engagement at 70, Fig. 1, with a rocking lever 71 pivoted to the loom frame at 72 and actuated by a rod 73, the lower end portion of which is connected at 74 to one arm of a bell crank lever pivoted to the loom frame at 75. The other arm 76 of the bell crank, Fig. 1, is operatively engaged with a link 77 which is connected to one of the side arms which actuate one of the knives of the cutting mechanism, as will more fully appear, the construction being such that the selvage heddle will be raised and lowered in timed relation with the needle operation to interlock with the weft threads at the needle side of the cloth and form the selvage, while the selvage at the opposite side of the cloth will be formed by the selvage shuttles, as hereinbefore described.

When the needles advance into the shed, it is desirable that the weft thread or threads carried by the needles shall be freely drawn from the source of supply, but when the needles are withdrawn or being withdrawn from the shed, it is desirable that any slack left in the weft threads may be taken up in order to put the proper tension on the threads extending through the shed. The present invention, therefore, provides a take-up mechanism and clamping means for the threads which are best indicated in Figs. 4 and 10.

The two take-up mechanisms, one for each of the threads *e*, *f*, for the needles, are substantially the same and therefore a description of one will be sufficient for both. Secured to the supporting bar 18 is the bracket arm 78, Figs. 4 and 10, from which rises the arm 79 having its upper end bifurcated, as indicated in Fig. 4, and provided with the guide eyes 80. Pivotally mounted on the member 79 through the intermediacy of the lugs 81 is a clamp 82 pivotally mounted at 83 and having its lower end portion 84 adapted to bear upon the thread leading therethrough and hold it against a coöperating clamping member 85. A coil spring 86 normally throws the clamp 84 into clamping position, as indicated in Fig. 10.

Pivotally mounted at 87 is the take-up arm 88 having the hook finger 89 and also a clamp operating member 90 which, when the take-up arm 88 is moved into its dotted line position, Fig. 10, will meet the clamp 82 and release the thread held thereby. The arm 88 is associated with an arm 91 to which is pivotally connected at 92 the upper end of the operating rod 93, the construction being such that upon up-and-down movement of the rod 93 the tension arm will be moved from its operative to its inoperative position, and vice versa.

The lower end of the arm 93 is provided with a slotted portion 94 which engages a pin 95 carried by an arm 96 pivotally mounted at 97 to a bracket 98 mounted on the loom frame. The other end of the arm 96 has a toe portion 98 which is adapted to be engaged by a cam for periodically drawing down the rod 93 and moving the take-up arm from its dotted or inoperative position to its operative or full line position, Fig. 10.

As hereinbefore pointed out, there are two needles and two threads and consequently there are two take-up mechanisms each of which is substantially similar to the construction just described. The two arms 96 for actuating the take-up mechanism are mounted side by side, as best indicated in Fig. 11, and the ends 98 thereof are adapted to be engaged at times by the yielding cams 99 mounted on the disk 100 keyed to the shaft 101 which may be driven in timed relation with the other parts of the loom. The cams 99 are preferably formed as spring members or metal strips which are yieldingly held in operative position by the springs 102, Figs. 12 and 13, the construction being such that should the take-up arms meet with an undue obstruction during their movement from dotted to full line position, Fig. 10, the yielding action of the cams 99 serve to obviate breakage.

As hereinbefore pointed out the take-up arms are moved to take up the slack in the

threads as the needles are drawn from the double shed and at such times the two cams 99 act upon the levers 96 to effect simultaneous take-up action of the take-up devices, the threads, as indicated in Fig. 4, passing between the eyes 80 and under the hook of the arm 89. It is equally desirable that when the needles are advanced to pass the threads into the shed, that the two take-ups will be moved to inoperative or non-taking-up position. In the present instance of the invention this is effected by an arm 103, Figs. 10 and 11, having a pin 104 which underlies the pins 105 secured to the rods 93. The arm 103 is pivoted at 106 to a bracket rising from the loom frame and has a roller 107 which rides upon a cam 108 secured to the shaft 101. A spring 109 normally tends to hold the roller 107 in contact with the cam, the construction being such that when the roller passes over the cam the drop of the cam permits the spring 109 to act and thereby raise the pin 104 and lift both of the arms 93 and the connected take-up into inoperative position. As the arms move to inoperative position, the lugs 90 engage the clamps 82 and release the threads so that they may be drawn freely from the source of supply.

Since the open eye needle 21 carries a thread only on each alternate needle movement, it follows that during one of these movements, since no thread is carried by the needle, no take-up action is required for the associated thread. This is effected by simply omitting the cam 99 for operating the take-up mechanism associated with the open eye needle 21. In other words, the cam disk 100 has secured thereto side by side, the two take-up cams 99 for actuating the take-ups when both needles carry a thread, and it has a single take-up cam 99, Fig. 13, for acting only on the thread passing through the closed eye needle when the open eye needle is unprovided with a thread.

As the cloth is woven and the tuft yarns are inserted, the cloth passes to the take-up rolls 110, Fig. 1, and after each insertion of the tuft yarns, as is common in this class of looms, means is provided for cutting or trimming the yarns on the tread face of the fabric or cloth. This means consists of two knives, one of which, the rear knife in this instance, is moved in a straight path, from end to end, and the other of which is moved with a differential or shogging motion relative to its companion knife in order to cut the tuft yarns with a slicing or shearing cut.

In the present instance of the invention the loom frame has mounted thereon the rock shaft 111, Fig. 1, from which rises the two side arms 112 carrying at their upper end the straight-edged knife 113 which may be appropriately secured in adjusted position on the arms 112 by suitable bolts 114. Extending downwardly from the shaft 111 is the arm 115 connected by a link 116 with the upper end of an operating member 117 pivoted to the loom frame at 118, Fig. 1, and having a roller 119 which bears upon the periphery of a cam 120 secured to the shaft 57, the construction being such that the cams 120, of which there may be two, one at each side of the loom on the shaft 57, actuate the side arms 112 to move the knife 113 downwardly to its predetermined cutting position and in order that this cutting position may be accurately determined, the side member has connected thereto the link 77, hereinbefore described, which is provided with an adjusting screw 121, which, when the knife 113 is in its cutting position, contacts with a stop 122, Fig. 4.

The other cutting member is arranged frontwardly of the straight edged knife, just described, and its two end portions are actuated by side arms which have differential or movements non-concurrently. In the present instance the side arms 123, one of which is shown in Fig. 1, are mounted to rock upon a shaft 124 and each has a downwardly extending arm 125. Secured to the cam shaft 32, Fig. 1, are the two side cams 126 and 127. The side arms 125 each carry rolls 128, Fig. 1, the roller of one of said arms being actuated by the cam 126 and the roller of the other of said arms being actuated by the cam 127. Since the cams 126 and 127 are offset on the shaft 123, as indicated in Fig. 1, it follows that one end of the front knife will move in advance of the other end, and then the other end will catch up with the first end during the cutting operation of the knife. The upper end of each of the arms 123 is provided with a link 129, Fig. 3, which is connected to a swivel 130 operatively connected to the knife 131. The knife 131 is best shown in its three positions in Fig. 2. The full line position of the knife 131, Fig. 2, indicates that the edge of the knife near one end thereof is straight, but toward the other end thereof at 132 the knife curves frontwardly. The dotted line position of the knife 131 indicates that the advancing edge at the right has commenced the cut of a row of loops and is nearing a point where that end of the knife comes to rest. The other end of the knife at the left, Fig. 2, continues to move frontwardly from the dotted to the dot-and-dash line position wherein it will be apparent that the knife is moved with a shearing cut from one end of its companion or straight-edged knife to the other.

The front or guillotine knife 131 may be adjusted on its carrying slide by means of the plate 133 provided with suitable slots 134 for adjusting and securing bolts.

Claims—

1. In a loom for weaving tuft pile fabrics,

the combination of shedding mechanism for alternately forming a double and single shed, two needles for alternately introducing two threads and a single thread in the double and single sheds respectively, a pair of shuttles at one side of the loom, and means for yieldingly operating the shuttles to simultaneously pass a selvage thread through loops of the weft thread.

2. In a tuft pile fabric loom, the combination of shedding mechanism for alternately forming a double and single shed, two needles, means for simultaneously operating both needles, means for supplying a weft thread to one of the needles for every alternate operation of the needles, two selvage shuttles acting in coöperation with the two needles, and means for yieldingly moving the shuttles to interlock the selvage and weft threads and for positively moving the shuttles in the opposite direction.

3. In a tuft pile fabric loom, the combination of shedding mechanism, two needles, one having a closed eye and carrying a weft thread and the other an open eye, means for simultaneously moving the needles transversely of the loom, means for supplying a weft thread to the open eye needle on alternate inserting movements, two selvage shuttles at the opposite side of the loom for simultaneously interlocking a separate selvage thread with each of the weft threads introduced by the needles, and means for yieldingly advancing the shuttles on their active stroke.

4. In a tuft pile fabric loom, the combination of shedding mechanism, two needles, one having a closed eye and carrying a weft thread and the other an open eye, means for simultaneously moving the needles transversely of the loom, means for supplying a weft thread to the open eye needle on alternate inserting movements, two selvage shuttles at the opposite side of the loom for simultaneously interlocking a separate selvage thread with each of the weft threads introduced by the needles, means for yieldingly advancing the shuttles on their active stroke, and means for taking up the slack thread from the needles.

5. In a tuft pile fabric loom, the combination of shedding mechanism for the binder warps, a fixed harness frame for stuffer warps, a selvage heddle at one side of the loom for the selvage warp and means for operating it, two needles for simultaneously introducing two wefts in sheds formed above and below the stuffer warps and a single weft in a single shed formed above the stuffer warp, and two selvage shuttles on the side of the loom opposite the selvage heddle for interlocking a selvage thread with each of the weft threads inserted by the needles.

6. In a tuft pile fabric loom, the combination of shedding mechanism for binder warps, a fixed harness frame for stuffer warps, a selvage heddle at one side of the loom for a selvage forming warp, two selvage shuttles at the opposite side of the loom for forming a selvage at that side of the cloth, two needles, and means for simultaneously inserting said needles to simultaneously lay two wefts and on alternate movements to lay a single weft.

7. In a tuft pile fabric loom, the combination of shedding mechanism, two needles arranged one over the other, means for simultaneously operating said needles to cause them each to insert a weft on one movement and only one to insert a weft on every alternate movement, a reed, a hook for engaging the weft threads at the selvage adjacent to the fell of the cloth to prevent injury to the selvage by the needle pull upon the weft, and means for operating the hook to catch and release the weft threads.

8. In a tuft pile fabric loom, the combination of shedding mechanism, two needles arranged one over the other, means for simultaneously operating said needles to cause them each to insert a weft on one movement and only one to insert a weft on every alternate movement, a reed, a hook extending in a direction from front to rear of the loom for engaging the weft threads at the selvage adjacent to the fell of the cloth to prevent injury to the selvage by the needle pull upon the weft, and means for operating the hook to catch and release the weft threads.

9. In a tuft pile fabric loom, the combination of shedding mechanism, two needles, means for simultaneously operating both needles to simultaneously introduce two weft threads on one movement and a single weft on alternate movements, a reed, a pivotally mounted arm extending from the front rearward toward the reed and having a hook adjacent to the fell of the cloth, and means for swinging said arm about its pivot for engaging and disengaging the weft threads.

10. In a tuft pile fabric loom, the combination of shedding mechanism, two needles, means for simultaneously operating both needles to simultaneously introduce two weft threads on one movement and a single weft on alternate movements, a reed, a hook adjacent to the selvage at the fell of the cloth, and a second hook or finger opposite the opening of the shed, and means for operating the hook and finger to catch and release the weft threads.

11. In a tuft pile fabric loom, the combination of shedding mechanism, two needles, means for simultaneously operating both needles to simultaneously introduce two weft threads on one movement and a single weft

on alternate movements, a reed, a hook carrying arm extending rearwardly along the cloth selvage, a second hook extending opposite the opening of the shed, and a cam for operating both hooks.

12. In a tuft pile fabric loom, the combination of shedding mechanism, two needles, means for simultaneously operating both needles, means for causing the needles to lay two weft threads and a single weft thread alternately in double and single sheds, selvage shuttles for interlooping selvage threads with the weft threads, and means for taking up the slack in the weft threads during the operation of the needles.

13. In a tuft pile fabric loom, the combination of shedding mechanism, two needles, means for simultaneously operating both needles, means for causing the needles to lay two weft threads and a single weft thread alternately in double and single sheds, selvage shuttles for interlooping selvage threads with the weft threads, clamps for holding the weft threads as the needles are withdrawn from the shed, and a slack thread take-up for taking up the slack of the weft threads between the cloth selvage and clamps.

14. In a tuft pile fabric loom, the combination of shedding mechanism, two needles, means for simultaneously operating both needles, means for causing the needles to lay two weft threads and a single weft thread alternately in double and single sheds, selvage shuttles for interlooping selvage threads with the weft threads, a clamp for each of the weft threads, a take-up between the cloth selvage and clamps, and means actuated by the take-up for controlling the clamps.

15. In a tuft pile fabric loom, the combination of shedding mechanism, two needles, means for simultaneously operating both needles, means for causing the needles to lay two weft threads and a single weft thread alternately in double and single sheds, selvage shuttles for interlooping selvage threads with the weft threads, a clamp and a take-up for each weft thread, and means for actuating the take-up and clamps simultaneously.

16. In a tuft pile fabric loom, the combination of shedding mechanism, two needles for alternately laying double and single threads by simultaneous movements of the needles, two slack thread take-up devices, one for each of the needle threads, means for simultaneously causing both devices to take-up slack thread as the needles are withdrawn, and a single means acting on both take-up devices for releasing the slack thread taken up by the devices as the needles advance on their inserting stroke.

17. In a tuft pile fabric loom, the combination of shedding mechanism, two needles for alternately laying double and single threads by simultaneous movements of the needles, two slack thread take-up devices, one for each of the needle threads, a cam for simultaneously causing both take-up devices to take up slack thread as the needles are withdrawn from the shed, and a cam for moving both take-up devices to inoperative position as the needles are advanced into the shed.

18. In a tuft pile fabric loom, the combination of shedding mechanism, two needles for alternately laying double and single threads by simultaneous movements of the needles, two slack take-up devices, one for each of the needle threads, each comprising a pivoted thread engaging arm, a rod connected to each of said arms, a cam acting on said rods to swing the take-up devices to take-up slack thread, and means for moving both arms simultaneously in the opposite direction to non-take-up position.

19. In a tuft pile fabric loom, the combination of shedding mechanism, two needles for alternately laying double and single threads by simultaneous movements of the needles, two slack thread take-up devices, one for each of the needle threads, means for simultaneosly causing both devices to take-up slack thread as the needles are withdrawn, a single means acting on both take-up devices for releasing the slack thread taken up by the devices as the needles advance on their inserting stroke, and a thread clamp adapted to be operated to release the threads as the take-up devices are moved by said single means.

20. In a tuft pile fabric loom, the combination of two needles for simultaneously introducing two weft threads, two take-up mechanisms for taking-up the slack in the weft or needle threads simultaneously, a single cam actuated lever for moving the take-up mechanisms to inoperative position.

21. In a tuft pile fabric loom, the combination of two needles for simultaneously introducing two weft threads, two take-up mechanisms for taking up the slack in the weft or needle threads simultaneously, a single cam actuated lever for moving the take-up mechanisms to inoperative position, a thread clamp, and means connected to one of the take-up mechanisms for releasing the clamp.

In testimony whereof, I have signed my name to this specification.

HARRY HUGHES.