July 7, 1959 R. M. MARTIN 2,893,164

FURNITURE LEG BUILD UP

Filed Dec. 19, 1956

Fig. 1.

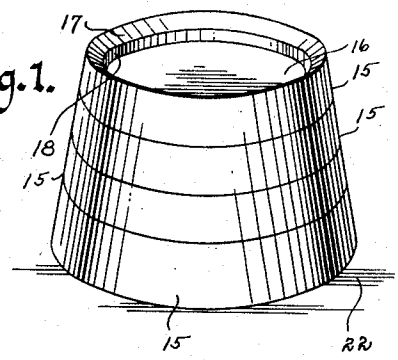

Fig. 2.

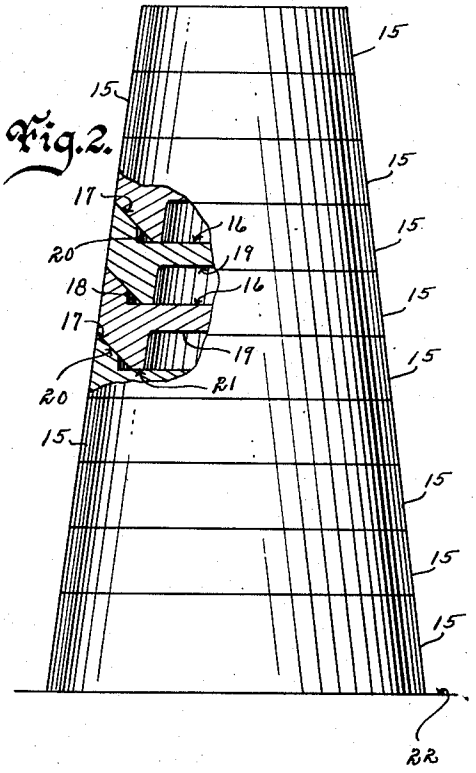

Fig. 3.

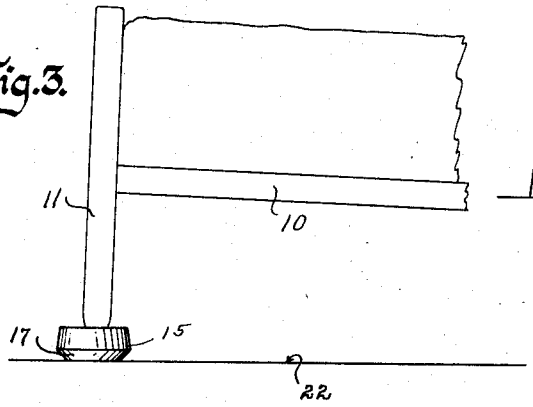

Fig. 4.

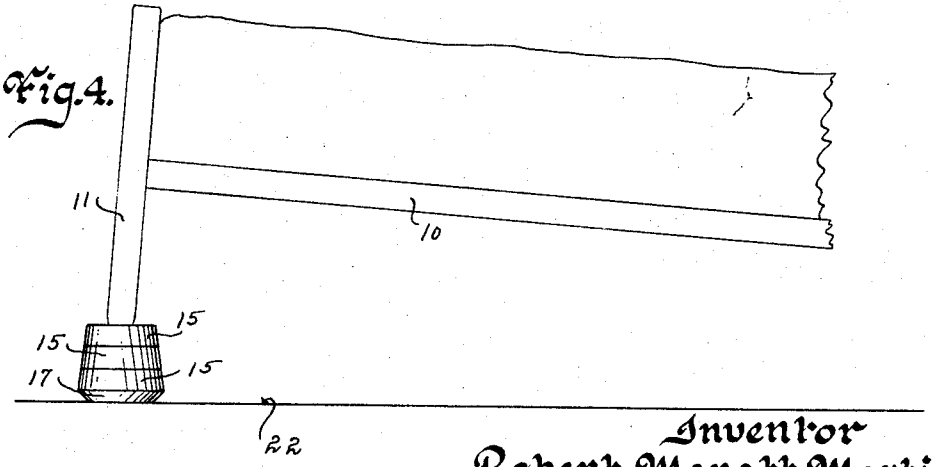

Witness
Edward P. Seeley

Inventor
Robert Manatt Martin
by M. Talbert Dick
Attorney

United States Patent Office

2,893,164

Patented July 7, 1959

2,893,164

FURNITURE LEG BUILD UP

Robert Manatt Martin, Pella, Iowa

Application December 19, 1956, Serial No. 629,382

1 Claim. (Cl. 45—137)

This invention relates to a progressive furniture leg build up device and more particularly to interlocking feet for elevating the two rear legs of a bed.

It is generally known that healthful benefits are obtained by spending at least a period each day with the upper portion of the body at a lower horizontal plane than the normal lower portion of the body. Obviously, with the head area at such lower level, more nourishing blood than normal is directed to the upper part of the body. Certain muscles, the eyes, the skin, and even the brain, are stimulated. Many practice this procedure by reclining on a declining board for a few minutes each day. This, however, takes valuable time from one's day and is not very comfortable. Furthermore, the time period is so short that progress cannot be made in increasing the angle of decline from the horizontal.

Therefore, one of the principal objects of my invention is to provide a means for elevating the rear end of a bed so that the user of the bed may obtain the beneficial results of reclining with the upper portion at a lower level while sleeping and without taking any time out of the person's waking hours.

A further object of this invention is to provide a means that permits the selective progressive elevation of the rear end of a bed.

More specifically, the object of this invention is to provide a plurality of interlocking ring feet that are adapted for selective use under the two rear legs of a bed for raising the rear end of the bed to a required height.

A still further object of my invention is to provide a furniture leg elevator means comprising a plurality of interlocking plates that prevent the leg from accidentally slipping therefrom.

Still further objects of my invention are to provide a furniture leg elevator means that is economical in manufacture, durable in use and refined in appearance.

These and other objects will be apparent to those skilled in the art.

My invention consists in the construction, arrangements, and combination, of the various parts of the device, whereby the objects contemplated are attained as hereinafter more fully set forth, specifically pointed out in my claim, and illustrated in the accompanying drawings, in which:

Fig. 1 is a perspective view of four of my interlocking feet plate rings,

Fig. 2 is a side view of a stack of my interlocking ring plates with sections cut away to more fully illustrate their construction,

Fig. 3 is a side view of the rear end of a bed using

one of my elevating interlocking ring plates under each of its legs, and

Fig. 4 is a side view of the rear end of a bed using three of my interlocking ring plates under each of its legs.

While I have explained my device as used under the legs of beds, obviously they may be used to elevate other types of devices and furniture.

In the drawings I use the numeral **10** to designate a bed having rear legs **11**. Any desired number of my ring foot plates may be placed under each of the rear legs **11**. In use, it is customary to start with only one foot plate under each of the rear legs **11**, then after a few weeks another foot plate is added, and this procedure is continued until the rear end of the bed is at considerable height above its front end. This progressive elevation is desirable because a new user would not be conditioned for extreme angular rest an entire night. I have used the numeral **15** to generally designate each of my plates. These plates **15** are circular and each has a shallow well **16** in its top and having a flat bottom. The upper end portion of the plate that forms the wall around the shallow well is beveled at its rim to extend upwardly and outwardly at **17**, as shown in Fig. 1. The height of the wall at its inner side and below this bevel is vertical and designated by the numeral **18**. The numeral **19** designates a shallow well in the bottom of each of the plates **15**. The lower outer circular area of the plate that surrounds the shallow well **19** is beveled to extend upwardly and outwardly at **20** and as shown in Fig. 2. This bevel **20** does not extend to the well **19** and thereby provides the flat ring contact surface **21**. When the first plate is placed under a leg, this part **21** engages the floor **22**. If desired, the first plate used need not have the bevel **20**, as shown in the lower plate of Fig. 2. The bottom end of the leg **11** is placed in the top shallow well **16** and due to the vertical inner side of the wall **18** the wall **18** will serve as a shoulder to retain the leg on the flat bottom of the well **16**. When the second ring foot plate is added, it is merely placed onto the first or adjacent lower one. Its lower bevel **20** engages and nests in the top bevel **17** of the lower foot plate. The contact ring **21** of the upper plate rests on the flat bottom of the top shallow well of the lower plate. This stacking of the plates continues in the same manner until the desired height is obtained. The nesting or conforming of one plate with another prevents any one plate from side lateral movement relative to another. This structure makes for a very rigid safe elevator support for the furniture leg. If desired all the foot ring plates may be duplicates of each other. However, in the drawings I show each plate having an outer side wall tapering upwardly and inwardly, thereby making for a more stable support. Also, if desired, the lower five or so plates **15** of the stack shown in Fig. 2 may be formed as a unit. When such is the case, the progressive build up is first started with the upper or smaller diameter plates and when they eventually equal five or so plates under each bed leg, they are removed and the five or so unit ones used, and the smaller single plates used to build up from the large unit.

Some changes may be made in the construction and arrangement of my furniture leg build up without departing from the real spirit and purpose of my invention, and it is my intention to cover by my claim, any modified

forms of structure or use of mechanical equivalents which may be reasonably included within its scope.

I claim:

In a furniture or like leg build up, a plurality of interlocking nesting foot plate members; each plate member comprising a plate, a shallow well in the top of said plate, a beveled rim at the top area of said shallow well extending outwardly and upwardly, and a beveled rim on the bottom of said plate extending inwardly and downwardly; said rim terminating in a flat bottom central area, whereby when said plate members are nested, the beveled inner rim of a lower plate member will engage the beveled outer rim of a plate member above it and with the flat central bottom area of such upper plate member engaging the bottom of the top shallow well of the lower plate member.

References Cited in the file of this patent

UNITED STATES PATENTS

Re. 18,647	Phillips	Nov. 8, 1932
2,366,867	Nichthauser	June 9, 1945