Feb. 23, 1954 H. E. SKETT 2,669,966

TEAT CUP FOR USE IN CONNECTION WITH MILKING MACHINES

Filed Nov. 27, 1950

FIG. 1.

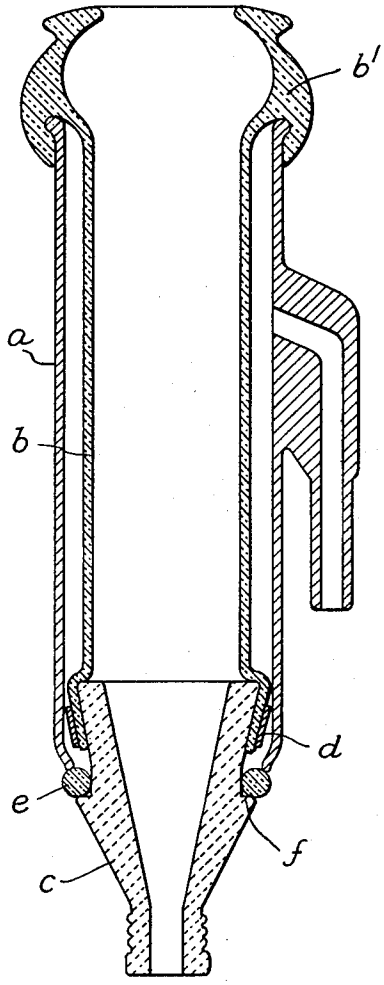

FIG. 2.

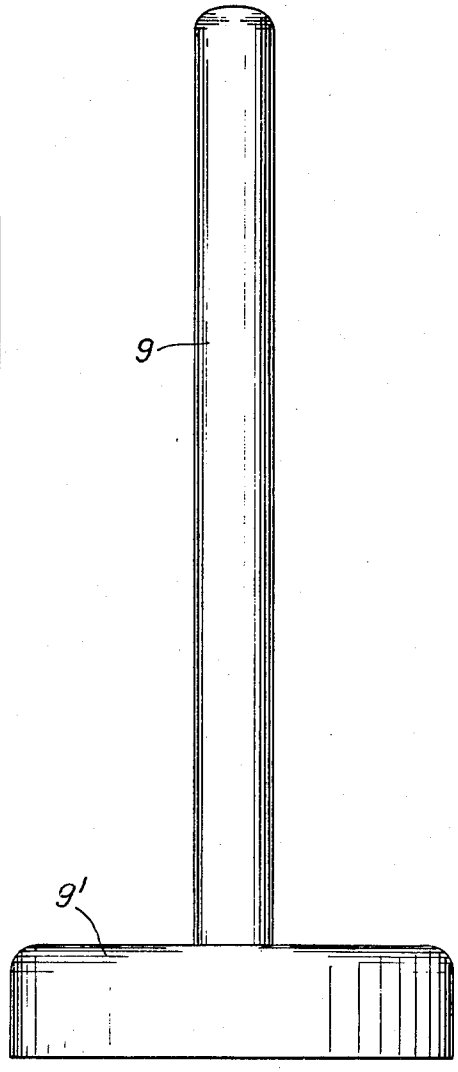

INVENTOR

HERBERT E. SKETT

By Wilkinson + Mawhinney

ATTYS.

Patented Feb. 23, 1954

2,669,966

UNITED STATES PATENT OFFICE

2,669,966

TEAT CUP FOR USE IN CONNECTION WITH MILKING MACHINES

Herbert Edward Skett, Ellesmere, England

Application November 27, 1950, Serial No. 197,651

3 Claims. (Cl. 119—14.49)

1

This invention relates to teat cups for milking machines of the type in which a rubber liner is fitted into a rigid shell or casing and is under tension therein. This tensioning or stretching of the liner is obtained by various known means. In some cases various complicated tools are used to stretch the liner, while in others, the outer metal shell comprises two telescopic parts which are extended and locked in position after insertion of the liner, to apply the necessary stretch. It has been found in practice that a telescopic teat cup is liable to be damaged by rough handling so that the desired telescopic action cannot be caused to take place.

The object of the present invention is to provide a teat cup of the non-telescopic type in which the liner can be stretched either with one extremely simple tool, or with no tools at all. The teat cup of this invention comprises an outer rigid shell open at its upper and lower ends, an extensible tubular liner disposed within the shell and secured at its upper end upon the upper end of the shell, a rigid bowl having an axial passage and the lower end of which is adapted to receive a milk tube, the upper part of the bowl being disposed within the lower end of the shell and the lower end of the liner being fitted over the inserted upper end of the bowl and held thereon by a ring forcing the said lower end into contact with the upper end of the bowl, and the lower part of the bowl having an externally projecting shoulder located below the lower opening of the shell and a flexible locking ring seated on the shoulder and maintained by the tension of the liner under compression between the shoulder and the rim of the lower opening of the shell to hold the bowl in position at the lower end of the shell.

In a convenient form of construction there is provided a rubber liner hooded at one end that fits over the upper end of a one-piece shell made of metal or other rigid material that is slightly reduced in diameter at one end. A hollow plug or bowl is fitted into the lower open end of the liner, this plug or bowl being preferably made of glass to enable the user of the machine to observe the flow of milk.

Assembly of the parts is effected as follows: One end of the bowl is somewhat expanded or conical, and is inserted in the open part of the liner, causing the latter to be somewhat expanded at this point. A tapered ring, preferably of metal, is caused to slide over the liner with the result that the latter is jammed between the internal tapered surface of the ring

2

and the external expanded portion of the bowl. The liner and bowl are then inserted in the shell. The hooded portion of the liner is then fitted over the wider end of the shell, the end of the bowl not fastened to the liner, protruding slightly beyond the narrow end of the shell.

In order to complete the assembly the bowl is gripped between the finger and thumb of the user, and pulled outwardly. This movement has the effect of tensioning the liner, this tension being maintained by locking the bowl in position by fitting a ring of rubber or other suitable material into an external recess or shoulder in or on the bowl. When the bowl is released, the tension on the liner causes the rubber ring to be drawn towards the narrow end of the shell where it engages the latter, and is locked between this and the recess in the bowl.

To further facilitate assembly, a simple tool consisting of a rigid peg mounted on any convenient base can be supplied and after joining together the glass bowl and the liner and inserting the liner in the shell, the assembly is placed on the peg of the tool with the hooded portion of the liner pointing towards the base. The peg will then engage the inside of the hollow plug and, on pressure being applied to the teat cup, the peg of the tool will push the hollow plug through the end of the teat cup shell, thus applying tension to the liner, and allowing the locking ring to be attached.

The invention is illustrated in the annexed drawings, in which,

Fig. 1 is a sectional view of a teat cup and

Fig. 2 is a front view of a tool used in assembling the parts of the teat cup.

Referring first to Fig. 1, *a* is the outer shell which is in the form of a hollow cylinder, and is preferably made of metal. An extensible liner *b*, preferably made of rubber, is inserted in the shell, the upper part *b'* of this liner being hooded and engaging around the exterior of the upper part of the shell. A bowl or plug *c* preferably made of glass has an upper and lower portion having the external configuration of a pair of inverted conical frustums arranged in a coaxial line. The portion of the base of the lower frustum which joins the tapered wall of the upper inverted frustum defines a shoulder *f*. The lowermost portion of the plug *c* terminates in a nipple to which a conventional milk tube may be attached. The interior of the plug *c* is provided with an inverted conical bore through the plug to permit passage of milk therethrough. The upper portion of the plug *c* is inserted into

the lower open end of the liner *b*. A tapered ring *d*, preferably made of metal, is caused to slide over the liner so that the latter is jammed between the internal surface of the ring and an external tapered surface of the bowl. The assembly is completed by placing a resiliently deformable locking ring *e*, upon shoulder *f* of plug *c*. The ring *e* is preferably of rubber, and has its outside diameter slightly greater than the diameter of the lower opening of the shell whereby it will be forced by the shell *a* into engagement with the shoulder *f* due to the upward force exerted upon the plug *c* by the extension of the liner *b* and retain the shell *a*, liner *b* and plug *c* as a completely assembled teat cup unit.

The tool illustrated in Fig. 2 comprises a rigid vertical peg *g* mounted on a flat base *g'*. After the bowl and the liner have been secured together, and after the liner has been inserted in the shell, the assembly is placed on the peg with the hooded portion of the liner pointing towards the base. The peg will then engage the inside of the hollow plug, and, on pressure being applied to the teat cup, the peg will push the plug through one end of the shell, thus applying tension to the liner, and allowing the locking ring to be attached.

I claim:

1. A teat cup for use with a milking machine comprising an outer rigid shell open at its upper and lower ends, an extensible tubular liner disposed within said shell and having its upper portion overlying the upper end of said shell, a connector plug having an upper and lower portion, said upper portion of said plug being of greater external diameter than the internal diameter of said tubular liner to assure a fit of said liner thereover, the lower portion of said plug being adapted to receive a milk tube, said upper portion of said plug joining said lower section at a flared portion defining a shoulder, the maximum diameter of said plug being slightly less than the diameter of the lower opening of said shell, means in engagement with said liner for retaining said liner and the upper portion of said plug in positive frictional engagement, and a resiliently deformable locking ring adapted to seat upon the shoulder of said plug and having a diameter slightly greater than the diameter of the opening of the lower end of said shell whereby said plug is prevented from being pulled up into said shell under the force of said extensible liner.

2. A teat cup for use with a milking machine

comprising an outer rigid shell open at its upper and lower ends, an extensible tubular liner disposed within said shell and having its upper portion overlying the upper end of said shell, a connector plug having an internal bore axially therethrough, said connector having upper and lower portions of inverted frusto-conical form, said upper portion joining said lower portion at an outwardly flared portion defining a shoulder, the lower portion of said tubular liner being extended over the conical base of the upper portion of said plug, means for insuring positive engagement between the lower end of said liner and the upper portion of said plug, the lower portion of said plug being adapted to receive a milk tube, the maximum outside diameter of said plug being slightly less than the internal diameter of the lower end of said shell, and a resiliently deformable locking ring adapted to seat upon the shoulder between the upper and lower portions of said plug, said locking ring having a diameter slightly greater than the diameter of the opening of the lower end of said shell whereby said plug is prevented from being pulled up into said shell under the force of said extensible liner.

3. A teat cup as claimed in claim 2 wherein said means for insuring positive engagement between the lower end of said liner and the upper portion of said plug is a tapered ring axially slidable partially over the upper portion of said plug for retaining the lower end of the liner in positive engagement with the upper inverted frusto-conical portion of said plug, the taper of said ring being frusto-conical with the base of the taper being inverted as is the upper portion of said plug.

HERBERT EDWARD SKETT.

References Cited in the file of this patent

UNITED STATES PATENTS

Number	Name	Date
1,574,265	Sutherland	Feb. 23, 1926
1,701,072	Hapgood	Feb. 5, 1929
2,055,718	Davis	Sept. 29, 1936

FOREIGN PATENTS

Number	Country	Date
24,260	Great Britain	1909
409,517	Great Britain	May 3, 1934
102,344	Australia	Oct. 26, 1937
118,404	Australia	Apr. 13, 1944
610,301	Great Britain	Oct. 13, 1948
652,723	Great Britain	May 2, 1951