Dec. 8, 1970 J. D. McGHEE 3,546,626

VOLTAGE SUPPLY

Filed Feb. 9, 1968 3 Sheets-Sheet 1

Fig. 3.

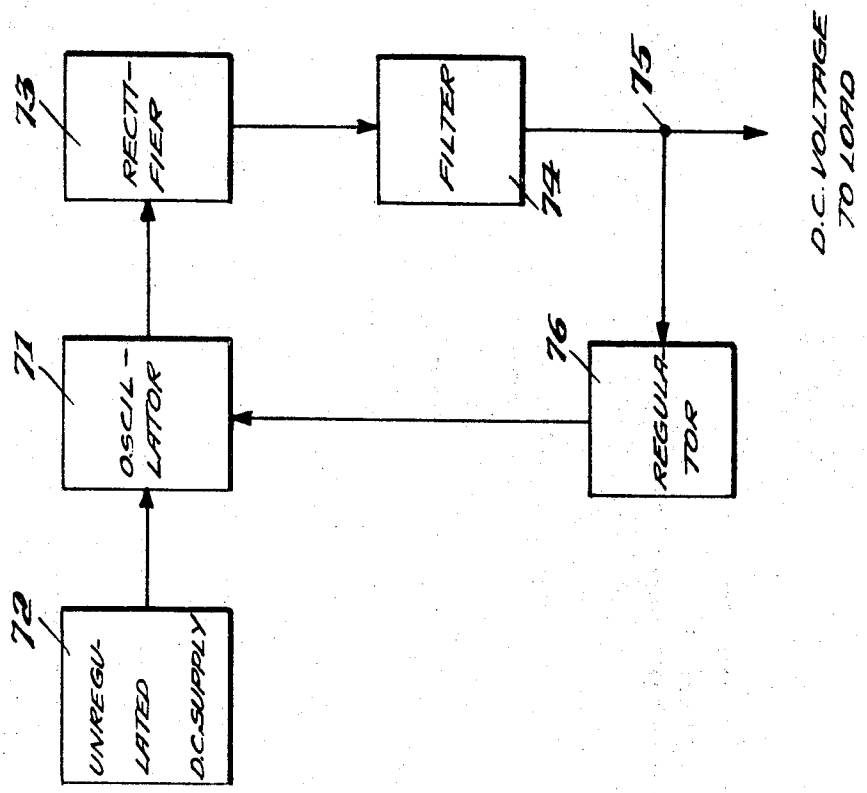

Fig. 1.

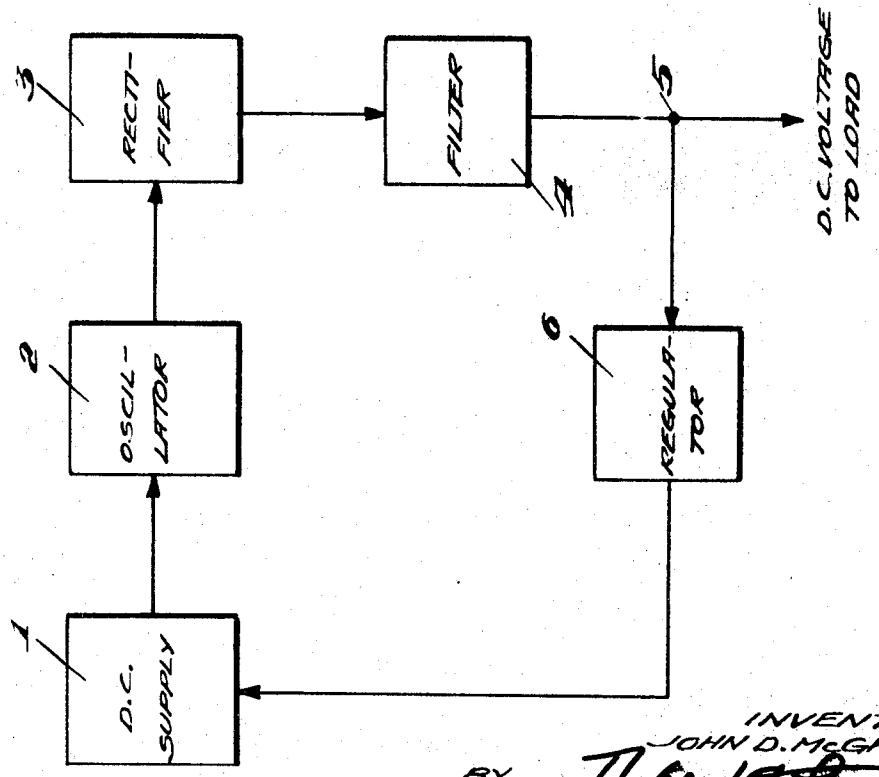

INVENTOR
JOHN D. McGHEE,
BY Robert Forster
AGENT

VOLTAGE SUPPLY

Filed Feb. 9, 1968 3 Sheets-Sheet 2

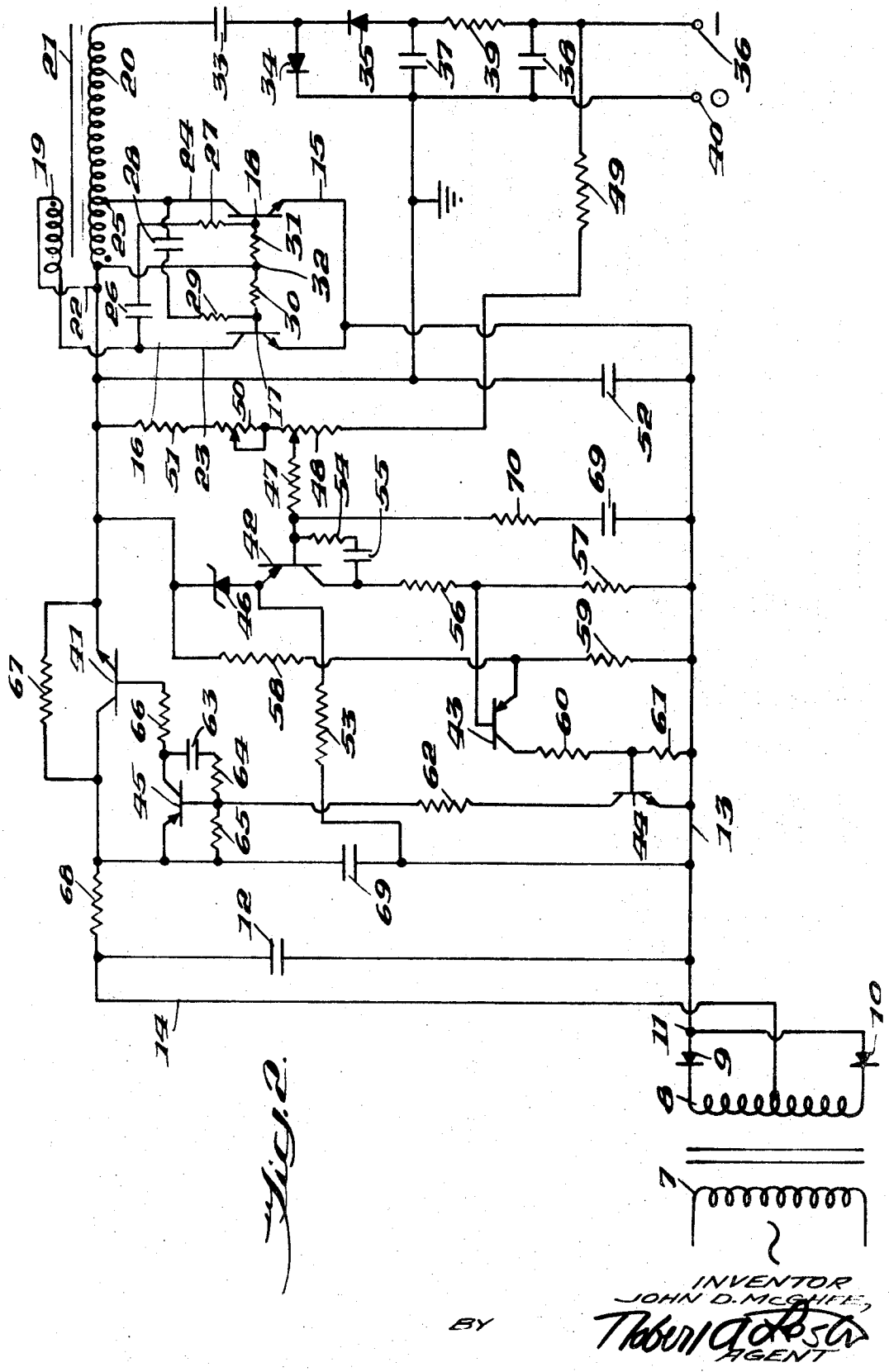

Fig. 2.

INVENTOR
JOHN D. McGHEE,
BY Robert A. Rosa
AGENT

Dec. 8, 1970 J. D. McGHEE 3,546,626

VOLTAGE SUPPLY

Filed Feb. 9, 1968 3 Sheets-Sheet 3

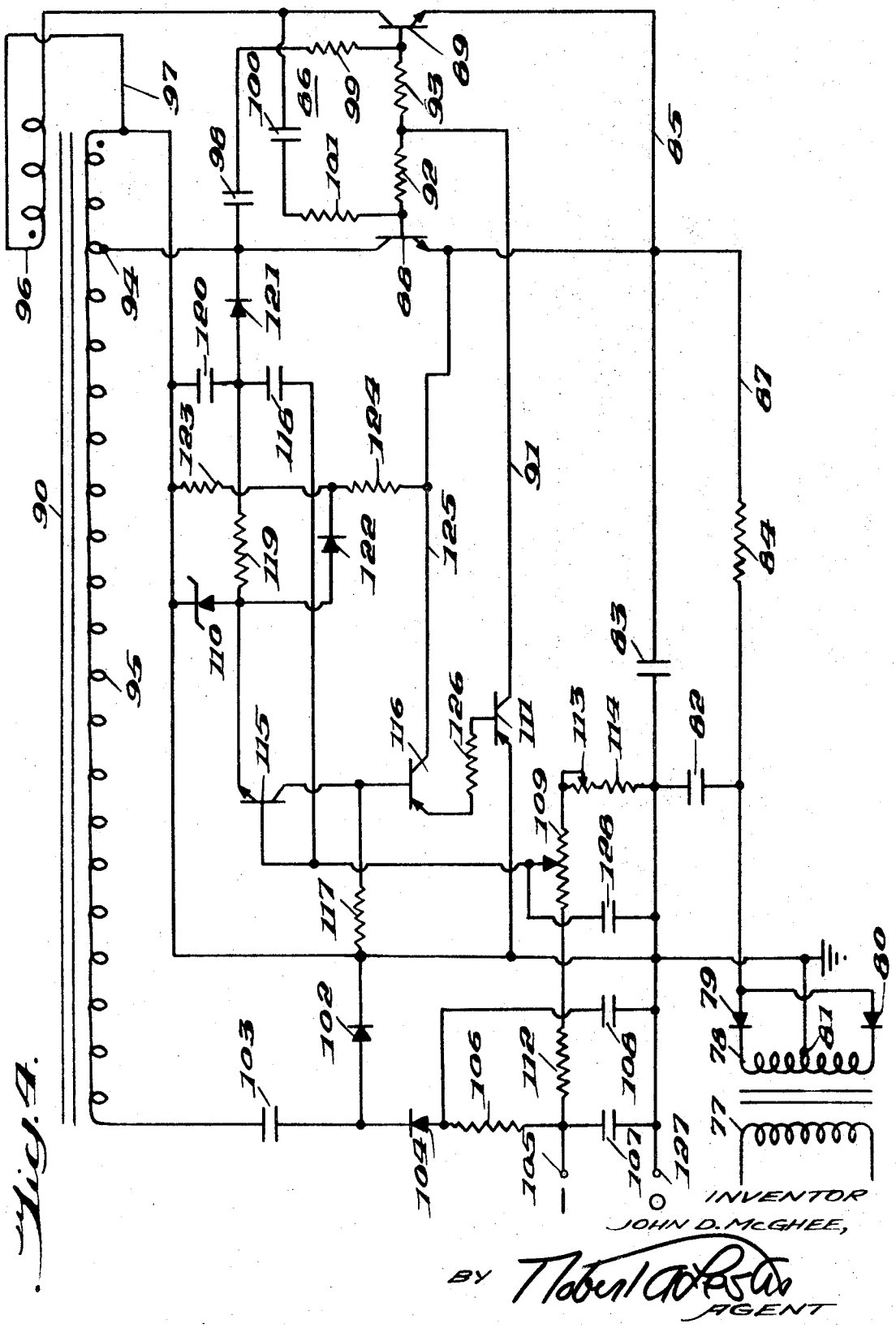

Fig. 4.

INVENTOR
JOHN D. McGHEE,
BY Robert A. Peterson
AGENT

United States Patent Office 3,546,626 Patented Dec. 8, 1970

3,546,626

VOLTAGE SUPPLY

John D. McGhee, Plymouth Meeting, Pa., assignor to E. I. du Pont de Nemours and Company, Wilmington, Del., a corporation of Delaware

Filed Feb. 9, 1968, Ser. No. 704,442
Int. Cl. H02m 3/28
U.S. Cl. 331—113 2 Claims

ABSTRACT OF THE DISCLOSURE

An oscillator comprising a transformer having primary and secondary windings, each having input and output ends, the windings being poled in opposite directions; and a pair of push-pull transistors having input and output circuits, the output circuit of one of the push-pull transistors connected to the output end of the primary winding and the output circuit of the other connected to the secondary winding such that the push-pull transistors are alternatively driven conductive and non-conductive thereby developing an A.C. potential in the transformer. In a preferred embodiment the oscillator is employed to produce a D.C. voltage by rectifying and filtering the A.C. potential in the secondary winding.

CROSS REFERENCE TO RELATED APPLICATIONS

This invention is particularly related to the subject matter of application Ser. No. 704,445, filed on the same day, entitled Energy Sensing Device by inventors Raymond W. Tabeling and John D. McGhee, in that the instant invention may be used in the system described and claimed therein to provide a stabilized D.C. voltage. This cross reference is merely illustrative and not intended to restrict the scope and/or use either invention.

In many electrical applications it is desirable to obtain a source of D.C. voltage that is stabilized against drift and line disturbances. For example, in the operation of a typical photomultiplier tube, a high negative stabilized D.C. voltage is required to bias the dynodes. Such a stabilized voltage may be supplied by the present invention. Also, by the practice of the instant invention, A.C. and various other D.C. signals may be produced.

In summary, the present invention relates to an oscillator comprising a transformer having primary and secondary windings each having input and output ends, said windings being poled in opposite directions; and a pair of push-pull transistors having input and output circuits, the output circuit of one of said push-pull transistors connected to said output end of said primary winding and the output circuits of the other connected to said secondary winding such that said push-pull transistors are alternatively driven conductive and nonconductive thereby developing an A.C. potential in said transformer.

For a better understanding of the invention, reference is made to the following description and the attendant drawings wherein:

FIG. 1 is a block diagram of a preferred embodiment of the invention;

FIG. 2 represents a detailed schematic of the embodiment of FIG. 1;

FIG. 3 is a block diagram of another preferred embodiment of the invention; and

FIG. 4 depicts a detailed schematic of the embodiment of FIG. 3.

As readily apparent to one skilled in the art, oscillators, such as described hereinafter, may be run in the forward or reverse direction with the output adapted to provide stable or variable A.C. or D.C. signals. To best explain

the nature of applicant's invention, the following description will be directed, primarily, toward the adaptation of the invention to provide a stabilized, regulated D.C. potential to load.

In the embodiment illustrated in FIG. 1, unregulated D.C. supply **1** provides an unregulated D.C. signal to the input of oscillator **2** which converts the D.C. signal to A.C. By subsequently rectifying and filtering the A.C. signal via rectifier **3** and filter **4**, a D.C. signal is obtained at output terminal **5**. To stabilize this signal, regulator **6** is incorporated in feedback relation between terminal **5** and D.C. supply **1**. This regulator compensates for any increase or decrease of the signal from a preselected value at terminal **5** by correspondingly decreasing or increasing the feedback signal to D.C. supply **1**.

A detailed schematic of this embodiment is shown in FIG. 2. Referring to this figure, a 120-v., 60-cycle line voltage is fed into primary winding **7**. The transformer secondary winding **8** is center-tapped and connected in series with diodes **9** and **10**, having common terminal **11**. This arrangement is readily recognizable as a standard full-wave, center-tapped rectifier, the output of which is a fluctuating D.C. potential. This D.C. potential is subsequently smoothed by the filtering action of capacitor **12**, coupled between conductor **13** and center-tap conductor **14**, and capacitor **52**, coupled between conductor **13** and ground. (Alternatively, this smoothed D.C. potential may be supplied by a battery or other suitable voltage source.)

The smoothed potential is then fed through conductor **13** to common-emitter connector **15** of oscillator **16**. The oscillator includes a pair of transistors **17** and **18** connected in push-pull relation across the primary and secondary windings, **19** and **20**, respectively, of transformer **21**. The dot adjacent to one end of each winding indicates that the magnetic flux appearing in the core is of a determined direction whenever a current is applied to the dotted end of the winding. Whenever this current is increasing or decreasing in a winding, the dotted end of the winding is at a higher potential than the other end of that winding. The dotted end of each winding will be referred to hereinafter as the "input end" of the respective winding, with the other end being the "output end." While transformer **21** can be almost any type of transformer, applicant has found that a television flyback transformer is particularly suitable. Also, though transistors **16** and **17** are shown to be NPN transistors, it should be apparent that PNP transistors could just as easily be used.

In this embodiment the input ends of primary winding **19** and secondary winding **20** are coupled together by means of conductor **22**. This conductor is generally held at a fixed potential so that the oscillating voltage produced in secondary winding **20** is centered about a given potential. If, as in this embodiment, conductor **22** is grounded, a symmetrical A.C. potential is produced.

As shown, the collector of transistor **17** is connected to the output end of primary winding **19** by means of conductor **23**, while the collector of transistor **18** is connected via conductor **24** to tap **25** of secondary winding **20**. To obtain a balanced output, tap **25** is preferably positioned such that length of secondary winding **20** from conductor **22** to tap **25** is equal to the total length of primary winding **19**.

Feedbacks are provided from the collector of transistor **17** to the base of transistor **18** via capacitor **26** and resistor **27**, and from the collector of transistor **18** to the base of transistor **17** via capacitor **28** and resistor **29**.

Capacitors **26** and **28** are employed to block direct current feedback. Also connected to the bases of transistors **17** and **18** are resistors **30** and **31**, respectively. These two resistors are coupled together to terminal **32**,

which is, preferably, held at a fixed potential, e.g., ground.

The oscillator of this embodiment has been adapted to operate between the saturation states of push-pull transistors **17** and **18** as follows. Initially, the bases of both transistors are at ground. When the negative D.C. potential from the D.C. supply is applied to the emitters of both transistors, the voltage drop between the base and emitter of each transistor causes both transistors to start conducting. However, an electrical unbalance generally exists, even between transistors of the same type, so that one transistor initially conducts more heavily than the other. Such an unbalance is necessary in order to start the circuit into oscillation.

Assuming that transistor **18** initially pulls a greater current, the current flow in transformer **21** will be from the output end of primary winding **19** to tap **25** of secondary winding **20**. This current flow turns off transistor **17** and capacitor **26** charges. The increase in current flow in the indicated direction, caused by the initial conduction of transistor **18**, is reflected from primary winding **19** into secondary winding **20**. Thus, the current in secondary winding **20** includes both the original current flowing through conductor **22** plus the induced current. This results in an increased current through conductor **22**, with the cummulative effect being an overall increase in current through transformer **21** and transistor **18**. As the current increases, the potential of the collector of transistor **18** decreases. Finally, transistor **18** reaches saturation and the potential of the collector equals that of the emitter. No further increase in current is possible. The induced voltage in secondary winding **20** drops to zero, resulting in a decrease in the total current flow. This decrease creates an induced voltage in the opposite direction, which further decreases the current flow until current starts flowing in the opposite direction. Transistor **17** then turns on and transistor **18** turns off. As transistor **17** drives into saturation, capacitor **28** charges and capacitor **26** discharges. When transistor **17** reaches saturation, the current stops increasing and the cycle is repeated.

The output of oscillator **16** is an A.C. potential. The oscillator illustrated in this embodiment was adapted to produce an amplified signal by incorporating secondary winding having a larger number of turns than the primary winding.

The A.C. potential in secondary winding **20** is feed into a serially-connected, voltage-doubling rectifier that includes capacitor **33** and diodes **34** and **35**. When the current flows from the input end to the output end of secondary winding **20**, capacitor **33** charges via diode **34** and when flowing in the opposite direction, capacitor **33** discharges through diode **35**. Diode **35** is connected in series to output terminal **36** through a filter comprising capacitors **37** and **38** and resistor **39**. The grounded side of the filter is coupled to reference output terminal **40**. The voltage appearing at terminal **36** is a high negative, D.C. potential.

Under ideal conditions, the output would be extremely stable. However, because of the presence of drift and line disturbances, it is desirable to employ a feedback to oscillator **16** to compensate for voltage variations at terminal **36**. The feedback utilizes a typical series-regulator which comprises a control transistor **41** and an amplifier. The amplifier includes transistors **42**, **43**, **44** and **45** referenced by Zener diode **46**.

The base of transistor **42** is connected via resistor **47** to the wiper of variable voltage-divider **48**. Voltage-divider **48** is coupled to output terminal **36** through resistor **49** and to ground through variable resistor **50** and fixed resistor **51**. If the voltage drop across Zener diode **46** is less than the voltage drop from ground to the wiper of voltage divider **48**, transistor **42** conducts. The amount of current pulled through biasing resistor **53** by transistor **42** is dependent upon the voltage at output terminal **36** and the settings of voltage divider **48** and resistor **50**, which provided coarse and fine adjustment, respectively.

The base and collector of transistor **42** are connected together by means of resistor **54** and capacitor **55** to reduce the high frequency A.C. gain of transistor **42**. (This prevents the amplifier from going into oscillation.) The collector of transistor **42** is coupled through resistor **56** to the base of transistor **43** and through resistors **56** and **57** to conductor **13**. The emitter of transistor **43** is biased by the voltage dividing action of resistors **58** and **59** which are connected to ground and conductor **13**, respectively. The output of transistor **43** is fed into the base of transistor **44** via resistor **60** and to conductor **13** via resistors **60** and **61**. Transistor **44** is coupled to conductor **13** through resistor **62** to transistor **45**. A negative feedback, from the collector to the base of transistor **45** through capacitor **63** and resistor **64**, is provided, as before, to prevent oscillations. The base is also connected to the emitters by means of resistor **65**. The output of transistor **45** via resistor **66** controls the gain of control transistor **41** in parallel with resistor **67**. Since the emitter of control transistor **41** is grounded, an increase or decrease in base current will provide a corresponding increase or decrease in the collector potential. This increase or decrease is filtered by capacitors **69** and **12** in combination with resistor **68**, and transmitted to common-emitter connector **15** of oscillator **16** via conductor **14**, secondary winding **8**, diode **9** and conductor **13**.

Voltage-divider **48** and resistor **50** are set so that the voltage supplied to load at output terminal **36** is at a predetermined value. If, because of a variation in A.C. potential in primary winding **7** or for any other reason, the potential of output terminal **36** goes more negative than the predetermined value, the voltage of the base of transistor **42** drops. This drop causes transistor **42** to conduct more heavily, raising the potential of the base of transistor **43**. When this happens transistor **43** and, necessarily, transistors **44** and **45** start to turn off. This reduces the current flow in control transistor **41** which raises the potential of the collector of control transistor **41**. This increase is fed, as previosuly described, to oscillator **16**, reducing the negative potential of the emitters of push-pull transistors **17** and **18** and, consequently, the amplitude of the A.C. potential in secondary winding **20**. This A.C. output is then rectified and filtered to provide a D.C. potential at output terminal **36** of the predetermined magnitude. Since there is a delay between the time the deviation in voltage is sensed and the time that it is returned to the predetermined value, a corrective phase lead is introduced by coupling the base of transistor **42** to conductor **13** through capacitor **69** and resistor **70**. This lead dampens the response of control transistor **41**, thereby preventing overcorrection. Otherwise, the voltage at output terminal **36** would oscillate each time a correction was made.

In FIG. 3, oscillator **71** is fed by unregulated D.C. supply **72**. The D.C. output of oscillator **71** is rectified and filtered to D.C. by rectifier **73** and filter **74**. The D.C. signal at output terminal **75** is regulated and stabilized by feedback through regulator **76** which applies a corrective signal directly to oscillator **71**, thereby maintaining the output signal at the desired level.

A detailed schematic of this embodiment is shown in FIG. 4 wherein the unregulated D.C. supply includes a full-wave, center-tapped rectifier and a filter. The rectifier is substantially the same as that described in the previous embodiment, with the A.C. line input supplied to primary winding **77**, reflected in secondary winding **78** and rectified by employing diodes **79** and **80** and center tap **81**. One difference is that center tap **81** is grounded. Since the D.C. supply is not regulated by feedback, it is desirable to minimize output variations by tying the center of secondary winding **78** to a fixed potential. The output of the rectifier is smoothed by the filter formed by capacitors **82** and **83**, connected to ground and opposite ends of resistor **84**. (Again, a battery or other D.C.

source may be used to provide an unregulated D.C. signal.)

The filtered signal is introduced into common-emitter connector **85** of oscillator **86** via conductor **87**. The oscillator incorporates push-pull transistors **88** and **89** coupled across opposite windings of transformer **90**. In this embodiment the regulation of oscillator **86** is provided by varying the bias signal applied to the bases of transistors **88** and **89** through conductor **91** and serially-connected resistors **92** and **93**. The collectors of transistors **88** and **89** are connected to tap **94** of secondary winding **95** and to the output end of primary winding **96**, respectively. The windings of transformer **90** are poled in opposite directions and connected, preferably, by fixed-potential conductor **97**. The earlier designations of "input and output ends" are retained. A.C. feedbacks from the collector of transistor **88** through capacitor **98** and resistor **99** to the base of transistor **89** and from the collector of transistor **89** through capacitor **100** and resistor **101** to the base of transistor **88** are provided.

The operation of oscillator **86** is the same as that of oscillator **16** of FIG. 2, except that push-pull transistors **88** and **89** operate between unsaturated conduction states as determined by the base bias potential.

The A.C. output from oscillator **86** through secondary winding **95** is rectified by a serially-coupled rectifier. The rectifier is a voltage doubler that draws electrons through diode **102** into capacitor **103** on one-half of the cycle and discharges them via diode **104** on the other half. The resulting negative D.C. potential is smoothed by a filter, consisting of resistor **106** and capacitors **107** and **108**, connected between diode **104** and output terminal **105**.

The negative potential at output terminal **105** is controlled by a regulator that is coupled between output terminal **105** and the bases of push-pull transistors **88** and **89** of oscillator **86**. The regulator includes voltage divider **109**, an amplifier referenced by Zener diode **110** and a control transistor **111**. Voltage divider **109** is connected to output terminal **105** through resistor **112** and to ground through variable resistor **113** and fixed resistor **114**. The potential of the wiper of voltage divider **109** is set by coarse adjustment of the divider itself and by fine adjustment of resistor **113**. This potential determines the feedback through transistors **115** and **116** of the amplifier to the base of control transistor **111**. Transistor **115** is connected through its base to the wiper of voltage divider **109**, through its emitter to Zener diode **110**, and through its collector to the base of transistor **116**. The collector of transistor **115** is tied to ground by resistor **117**. The base of transistor **115** is connected through capacitor **118** to resistor **119** thereby providing a phase lead to dampen the input to the base, as the oscillator voltage builds up.

Zener diode **110** is held at its breakdown voltage to provide a fixed reference level by connecting it to a filter, consisting of resistor **119** and capacitor **120**, which is coupled to rectifying diode **121**, which, in turn, is connected to the collector of transistor **88**. Diode **121**, however, does not conduct until oscillator **86** starts to operate. Therefore, it is necessary to provide alternative current path from the emitter of transistor **115** so that transistor **115** initially conducts. Otherwise, no bias signal would be supplied to the bases of push-pull transistors **88** and **90**. The alternative current path, sometimes called a "guaranteed turn-on," is provided by connecting diode **122** between the emitter of transistor **115** and a voltage divider formed by resistors **123** and **124**. The upper end of resistor **123** is grounded while the lower end of resistor **124** is coupled to the regulated D.C. supply via conductor **125**, common-emitter connector **85** and conductor **87**. The output of transistor **115** is fed to transistor **116** which is connected to common-emitter connector **85** by conductor **125** and to the base of control transistor **111** through resistor **126**. The output from transistor **116** determines the voltage drop across control transistor **111** which, in turn, varies the feedback to the bases of push-pull transistors **88** and **89**.

The operation of the regulator is as follows. First, assume that the D.C. potential across output terminal **105** and grounded reference terminal **127** becomes less negative than a preset value as determined by voltage divider **109** and resistor **113**. This raises the potential of the base of transistor **115**, causing transistor **115** to pull more current. This causes transistor **116** to conduct more, heavily, which increases the base current of control transistor **111**. As the base current is reduced, transistor **111** pulls less current and its collector goes more positive, driving the bases of push-pull transistors **88** and **89** more positive. This increases the amplitude of the output of oscillator **86** thereby restoring the D.C. potential to the original preset value. Since there is a delay between the time the signal is fed back through the wiper of voltage divider **109** and the time that the D.C. potential at output terminal **105** is restored to the preset value, capacitor **128** is connected between the wiper of voltage divider **109** and ground to prevent overcorrection.

While the present invention has been primarily described in conjunction with the production of a regulated, stabilized D.C. signal, the present invention can be adapted to produce regulated or unregulated, stabilized or unstabilized, A.C. or D.C. signals. For example, the embodiment of FIG. 1 can function as a regulated, stabilized A.C. supply by providing a load output between oscillator **2** and rectifier **3**.

It will be understood that various changes in the details, materials, steps, and arrangement of parts, which have been herein described and illustrated, may be made by those skilled in the art within the principle and scope of the invention as expressed in the appended claims.

What is claimed is:

1. In a D.C. voltage supply comprising:

a transistorized oscillator including a transformer comprising primary and secondary windings, each having input and output ends, said windings being poled in opposite directions, and a pair of push-pull transistors having input and output circuits, the output circuit of one of said push-pull transistors connected to said output end of said primary winding and the output circuit of the other transistor connected to said secondary winding such that said push-pull transistors are alternatively driven conductive and nonconductive, thereby developing an A.C. potential in said transformer;

a voltage means for supplying a D.C. voltage to the input circuit of said push-pull transistors;

a rectifying means connected to said output end of said secondary winding to convert said A.C. potential to a D.C. potential;

a filtering means coupled to said rectifying means to smooth said D.C. potential;

an output terminal connected to said filtering means; and

a regulating means electrically positioned between said output terminal and said oscillator for providing a D.C. feedback to said oscillator to control the magnitude of said D.C. potential;

the improvement wherein said regulating means comprises a variable voltage dividing means, an amplifying means, a control transistor having a base, collector, and emitter, and a Zener diode, said variable voltage dividing being coupled between said output terminal and said amplifying means for varying the input to said amplifying means, thereby allowing adjustment of said D.C. potential at said output terminal, said amplifying means being additionally connected to the emitter of said Zener diode and to said base of said control transistor, said collector of said control transistor being resistively connected to said supply means and said emitter of

said control transistor being connected to said fixed potential conductor of said oscillator thereby supplying said source of positive D.C. potential thereto, said emitter of said Zener diode being additionally connected resistively to said source of negative D.C. potential, and the collector of said Zener diode being connected to said fixed potential conductor, said amplifying means and said Zener diode providing a D.C. potential to said base of said control transistor such that the collector-emitter resistance of said control transistor is varied as a function of said D.C. potential at said output terminal whereby said D.C. potential at said output terminal is maintained at a preset value.

2. In an A.C. voltage supply comprising:

a transistorized oscillator including a transformer comprising primary and secondary windings, each having point and output ends, said windings being poled in opposite directions, and a pair of push-pull transistors having input and output circuits, the output circuit of one of said push-pull transistors connected to said output end of said primary winding and the output circuit of the other connected to said secondary winding such that said push-pull transistors are alternatively driven conductive and nonductive, thereby developing an A.C. potential in said transformer;

a voltage means for supplying a D.C. voltage to the input ciriuit of said push-pull transistors;

an output terminal connected to said output end of said secondary winding;

a rectifying means connected to said output terminal to convert said A.C. potential to a D.C. potential;

a filtering means coupled to said rectifying means to smooth said D.C. potential; and

a regulating means electrically positioned between said filtering and said oscillator for providing a D.C. feedback to said oscillator to control said A.C. potential at said output terminal;

the improvement wherein said regulating means comprises a variable voltage dividing means, an amplifying means, a control transistor having a base, collector, and emitter, and a Zener diode, said variable voltage dividing being coupled between said output terminal and said amplifying means for varying the input to said amplifying means, thereby allowing adjustment of said A.C. potential at said output terminal, said amplifying means being additionally connected to the emitter of said Zener diode and to said base of said control transistor, said collector of said control transistor being resistively connected to said supply means and said emitter of said control transistor being connected to said fixed potential conductor of said oscillator thereby supplying said source of positive D.C. potential thereto, said emitter of said Zener diode being additionally connected resistively to said source of negative D.C. potential, and the collector of said Zener diode being connected to said fixed potential conductor, said amplifying means and said Zener diode providing a D.C. potential to said base of said control transistor such that the collector-emitter resistance of said control transistor is varied as a function of said A.C. potential at said output terminal whereby said A.C. potential at said output terminal is maintained at a preset value.

References Cited

UNITED STATES PATENTS

2,987,664	6/1961	Poirier et al.	331—113
3,200,348	8/1965	Kammiller et al.	331—113
3,305,756	2/1967	Doss et al.	331—113
3,327,199	6/1967	Gardner et al.	331—113
3,387,228	6/1968	Randall	331—113
2,982,881	5/1961	Reich	331—112
3,066,265	11/1962	Janssen et al.	331—112
3,132,309	5/1964	Constable	321—2
3,161,785	12/1964	Cann	331—113
3,274,478	9/1966	Hollmann et al.	321—2
3,300,705	1/1967	Hunstad	331—112
3,412,311	11/1968	Siedband	331—113

OTHER REFERENCES

Popular Electronics, "Up-Verter," Ben Richards, October 1967, pp. 67–69.

JOHN KOMINSKI, Primary Examiner

U.S. Cl. X.R.

321—2, 18; 331—186