Dec. 4, 1962 H. G. ROHMANN 3,066,687

JEWELRY WASHER

Filed Sept. 1, 1961

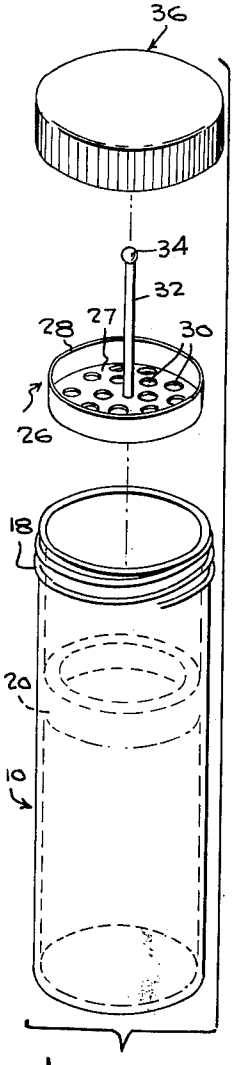

Fig-2

Fig-1

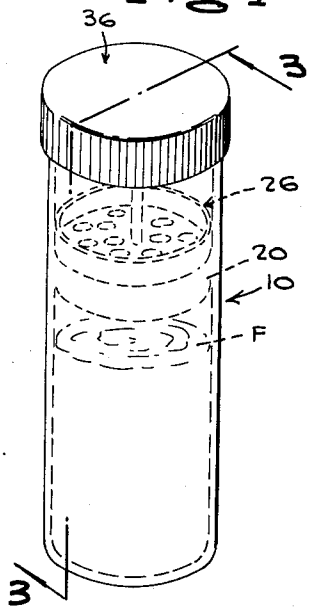

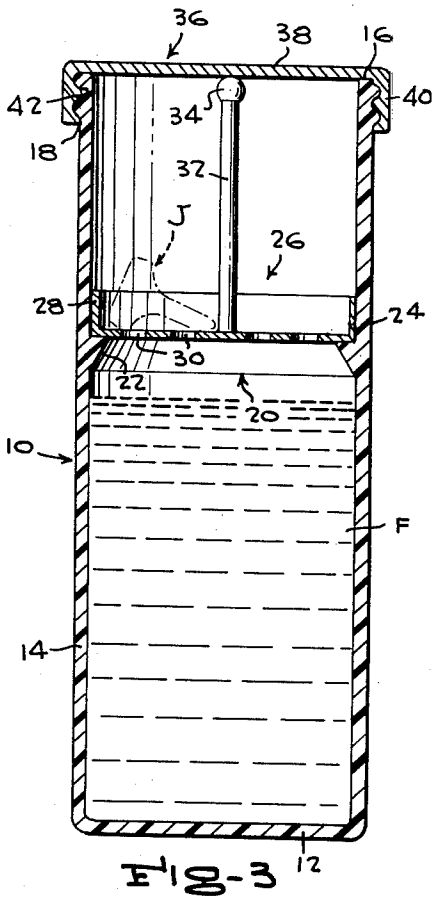

Fig-3

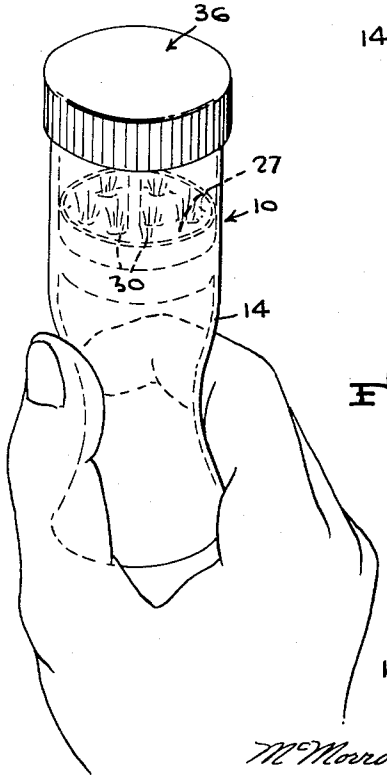

Fig-4

INVENTOR.
HENRY G. ROHMANN
BY
McMorrow, Berman & Davidson
ATTORNEYS

United States Patent Office

3,066,687

Patented Dec. 4, 1962

3,066,687

JEWELRY WASHER

Henry G. Rohmann, Box 508, 40 Main St., High Bridge, N.J.

Filed Sept. 1, 1961, Ser. No. 135,587
3 Claims. (Cl. 134—148)

This invention relates to a novel jewelry washer.

The primary object of the invention is the provision of a more effective and efficient device of the kind indicated, which provides for forcible contact of cleaning fluid with jewelry with the jewelry confined in a cleaning fluid container.

Another object of the invention is the provision of a simpler and more easily used device of the character indicated above, wherein jewelry to be cleaned is supported in the container on a removable perforated tray, the sidewall of the container below the tray being flexible, in the manner of a squeeze-bottle, whereby squeezing of the container acts to force cleaning fluid through the perforations of the tray into forcible contact with the jewelry, so as to more quickly and thoroughly clean the jewelry than is feasible merely by soaking the jewelry in cleaning fluid or shaking the container.

A further object of the invention is the provision of a device of the character indicated above, wherein the jewelry tray is provided with an upstanding post, which serves as means for manually removing the tray from the container, and as a means engageable by the cover of the container, for holding the tray down in place upon an internal shoulder in the container.

Other important objects and advantageous features of the invention will be apparent from the following description and the accompanying drawings, wherein, for purposes of illustration only, a specific form of the invention is set forth in detail.

In the drawings:

FIGURE 1 is a perspective view of a device of the present invention;

FIGURE 2 is an enlarged exploded perspective view thereof;

FIGURE 3 is a further enlarged vertical transverse section taken on the line 3—3 of FIGURE 1; and

FIGURE 4 is a schematic perspective view of the device, on the scale of FIGURE 1, showing the container squeezed in the hand of a user and cleaning fluid being forced upwardly through the perforations of the jewelry tray.

Referring in detail to the drawings, wherein like numerals designate like parts throughout the several views, the illustrated device comprises a preferably cylindrical container 10 having an imperforate bottom wall 12, an imperforate but flexible and resilient side wall 14, and an open upper end 16, whereat external screw threads 18 are provided. On a level preferably nearer to its upper end than to its lower end the container 10 is provided with an internal shoulder 20 which extends around the container side wall 14. The shoulder 20 preferably has an upwardly and inwardly angled under surface 22 which merges into the side wall, and a flat horizontal upper surface 24.

A jewelry tray 26 is removably seated upon the upper surface 24 of the shoulder 20 and preferably conforms, in shape, to the interior of the container, above the shoulder 20. The tray 26 is pan-shaped, has a flat bottom wall 27 and an upstanding sidewall 28. The bottom wall 27 is formed with a multiplicity of relatively large perforations 30 which are uniformly distributed across the bottom wall.

A fixed upstanding handle post 32, located at the center of the tray bottom wall 27, has a rounded and enlarged diameter finger-piece or knob 34 on its upper end, the

upper end of which is substantially flush with the upper end 16 of the container, while the tray 26 is in place in the container on the shoulder 20.

A pan-shaped screw cover 36 has an imperforate top wall 38 and a pendant peripheral flange 40 which has internal screw threads 42, adapted to engage the external screw threads 18, at the upper end of the container 10. In the fully closed or screwed-down position of the cover 36, its top wall 38 bears upon the upper end 16 of the container, and upon the top of the jewelry tray post knob 34, whereby the tray 26 is held down in place upon the shoulder 20, in any position of the device, such as an inverted or upside-down position. With the cover 36 fully closed and the container 10 inverted, cleaning fluid F, present in the container, passes down through the tray perforations 30 and remains in contact with jewelry J, present between the tray 26 and the cover 36, for soaking dirt from the jewelry.

With the container 10 in erect position, as shown in FIGURE 4, the cleaning fluid F, or at least the bulk thereof, is below the tray 26, as indicated in FIGURE 1, and the jewelry J rests upon the bottom wall 27 of the tray. The fluid is then adapted to be forcibly contacted with the jewelry, for cleaning the same, by squeezing the container side wall 14, below the shoulder 20, with sufficient force to jet the fluid through the tray bottom wall perforations 30. A slight loosening or backing off of the cover 36 provides for the expulsion of air present above the tray 26, as the container is squeezed, and induction of air into the container to replace that expelled, as the compression of the container is released and the container side wall 14 is permitted to expand and resume its original shape. Squeezings and relaxations of the container side wall 14 are repeated often enough to effect cleaning of the jewelry J, and the container side wall 14 is preferably transparent, as indicated in FIGURES 1 and 4, to enable the user to watch the progress of the cleaning of the jewelry.

Although there has been shown and described a prefered form of the invention, it is to be understood that the invention is not necessarily confined thereto, and that any change or changes in the structure of and in the relative arrangements of components thereof are contemplated as being within the scope of the invention as defined by the claims appended hereto.

What is claimed is:

1. A jewelry washer comprising a container having an open upper end, a perforated jewelry tray supported within the container and spaced downwardly from said upper end, said container having a flexible and resilient side wall, the part of said side wall below the tray being adapted to be squeezed to force cleaning fluid present in the container upwardly through the tray into contact with jewelry present in the tray and relaxed to withdraw cleaning fluid from the tray into the container below the tray, said container having an internal shoulder and said tray being removable through the upper end of the container and resting upon said shoulder, a cover closing the upper end of the container, and means on said tray and engaging said cover for holding the tray upon said shoulder.

2. A jewelry washer comprising a container having an open upper end, a perforated jewelry tray supported within the container and spaced downwardly from said upper end, said container having a flexible and resilient side wall, the part of said side wall below the tray being adapted to be squeezed to force cleaning fluid present in the container upwardly through the tray into contact with jewelry present in the tray and relaxed to withdraw cleaning fluid from the tray into the container below the tray, said container having an internal shoulder and said tray being removable through the upper end of the con-

tainer and resting upon said shoulder, a fixed upstanding handle post on said tray having an upper end on a level with the upper end of the container, and a cover removably secured on and closing the upper end of the container, said cover engaging the upper end of the post and holding the tray upon said shoulder.

3. A jewelry washer comprising a container having an open upper end, a perforated jewelry tray supported within the container and spaced downwardly from said upper end, said container having a flexible and resilient side wall, the part of said side wall below the tray being adapted to be squeezed to force cleaning fluid present in the container upwardly through the tray into contact with jewelry present in the tray and relaxed to withdraw cleaning fluid from the tray into the container below the tray, said container having an internal shoulder and said tray being removable through the upper end of the container and resting upon said shoulder, a fixed upstanding handle post on said tray having an upper end on a level with the upper end of the container, and a cover removably secured on and closing the upper end of the container, said cover engaging the upper end of the post and holding the tray upon said shoulder, said cover being threaded on the container and being adapted to be fully threaded onto the container so as to retain cleaning fluid in the container while the container is inverted for soaking jewelry in cleaning fluid, said cover being adapted to be partially unthreaded from the container so as to provide for the expulsion of air from the container as the container is squeezed and for the induction of outside air into the container as the container side wall is released and resumes its original shape.

References Cited in the file of this patent

UNITED STATES PATENTS

1,722,403	Vetter	July 30, 1929
2,076,011	Surface	Apr. 6, 1937
2,103,699	Sheehan	Dec. 28, 1937
2,642,313	Montenier	June 16, 1953