US 20040149429A1

(19) **United States**

(12) **Patent Application Publication** (10) **Pub. No.: US 2004/0149429 A1**

Dilber et al. (43) **Pub. Date: Aug. 5, 2004**

(54) HIGH EXPANSION PLUG WITH STACKED CUPS

(76) Inventors: **Halit Dilber**, Katy, TX (US); **Clint E. Mickey**, Spring, TX (US)

Correspondence Address:
DUANE, MORRIS, LLP
SUITE 3150
3200 SOUTHWEST FREEWAY
HOUSTON, TX 77046 (US)

(21) Appl. No.: **10/358,001**

(22) Filed: **Feb. 4, 2003**

Publication Classification

(51) **Int. Cl.^{7}** **E21B 23/00**

(52) **U.S. Cl.** **166/134**; 166/135; 166/192; 166/202

(57) ABSTRACT

A through tubing casing plug is disclosed. It features a stack of nested cup shaped elements that initially slope to reduce the run in diameter. The stack is compressed to force the periphery of the nested cups to move outwardly so that the collective outer surfaces of the cups can seal on the casing. The cups have sufficient initial thickness so that they remain intact despite some radial growth resulting from the compression process. In a particular example, the run in dimension is 2.13 inches and the stack expands to seal against casing with an inside diameter of 6.9 inches while holding a differential of 500 pounds per square inch and more.

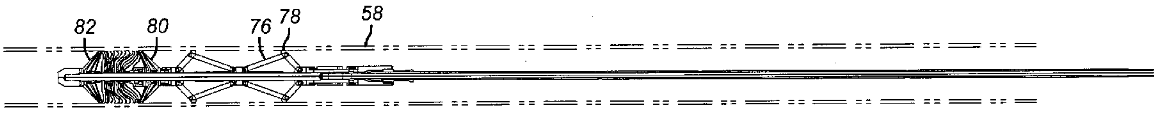

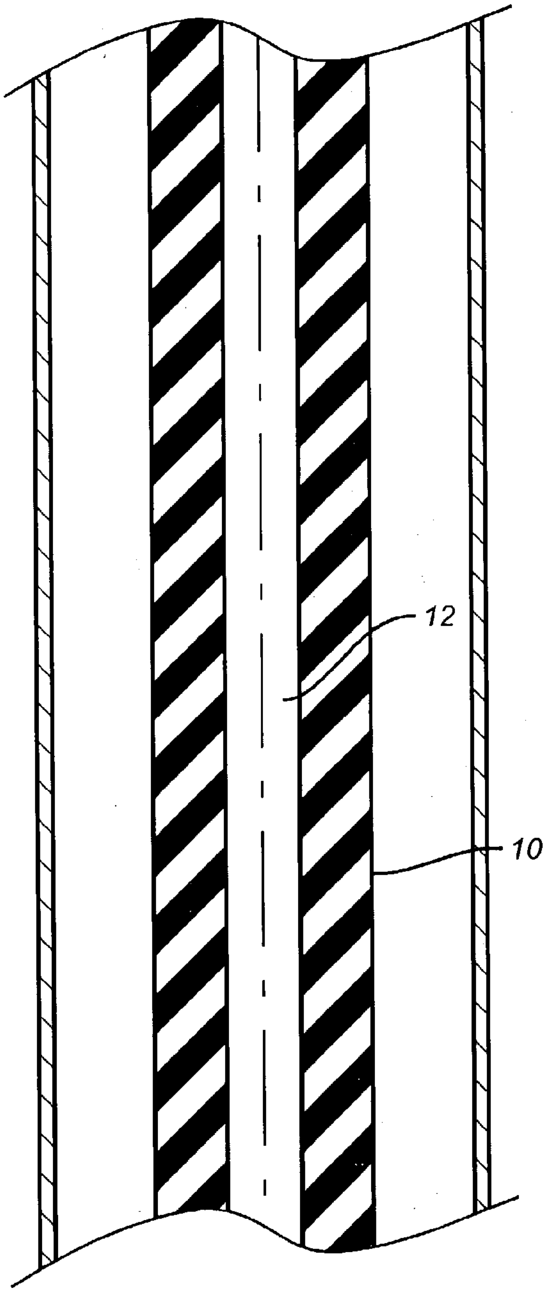

(PRIOR ART)
FIG. 1

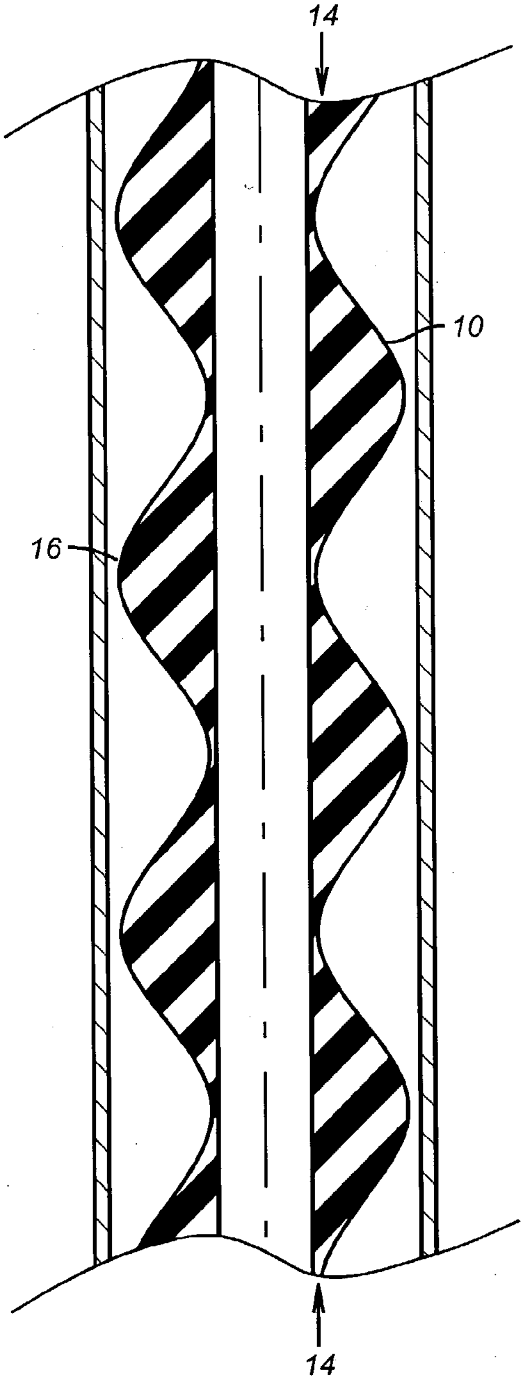

(PRIOR ART)
FIG. 2

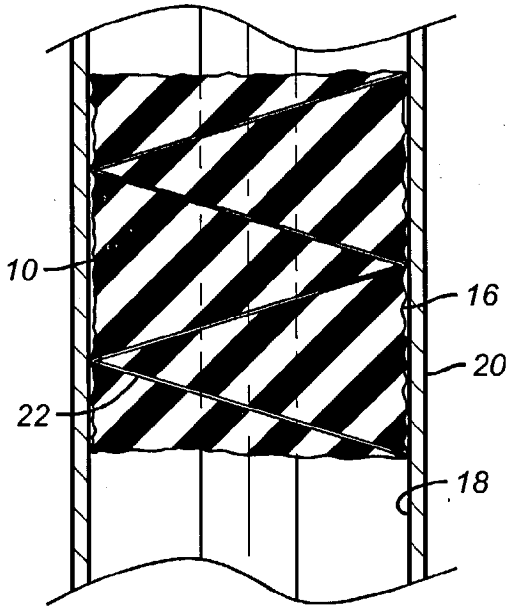

(PRIOR ART)

FIG. 3

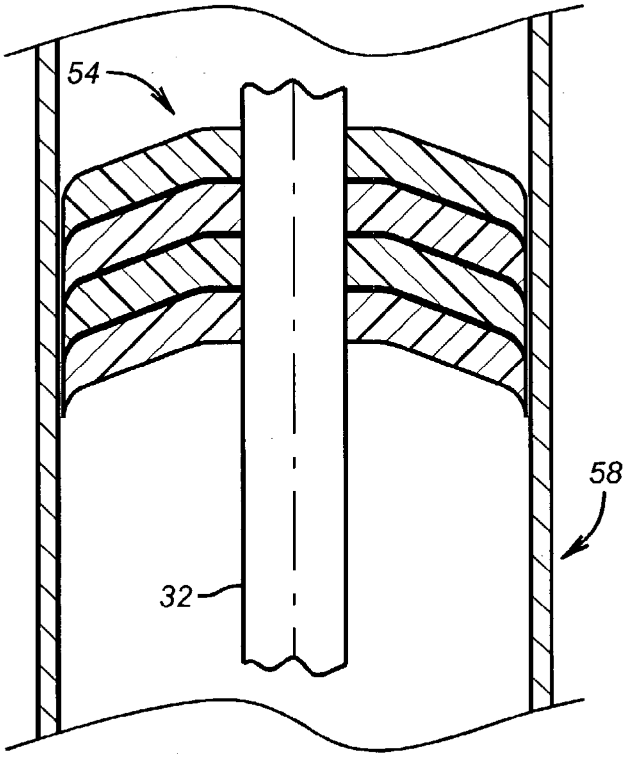

FIG. 5

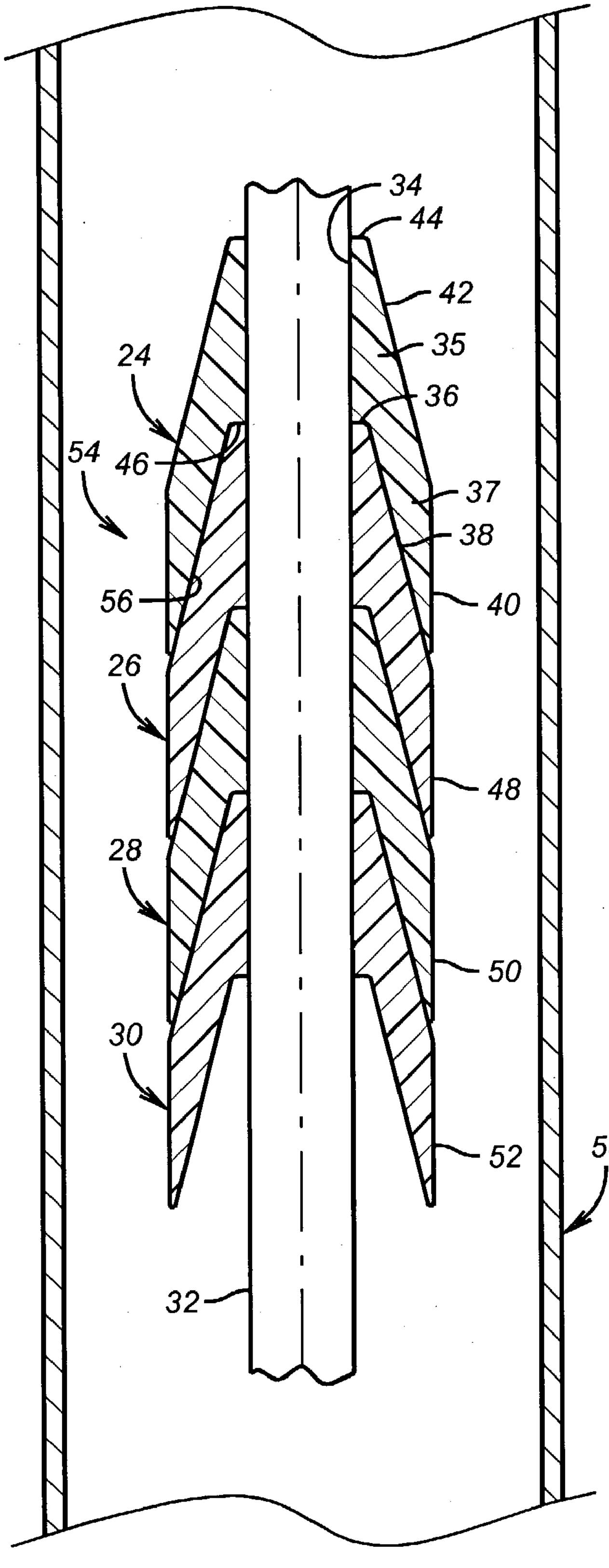

FIG. 4

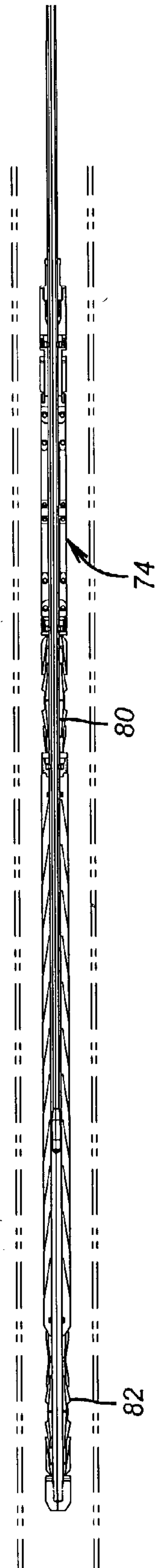

FIG. 6

FIG. 7

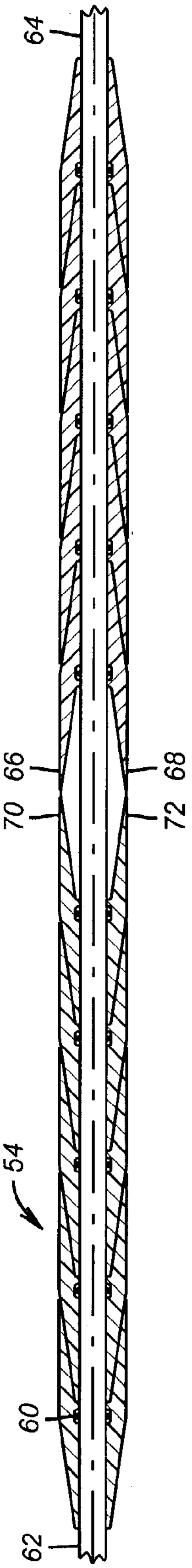

FIG. 8

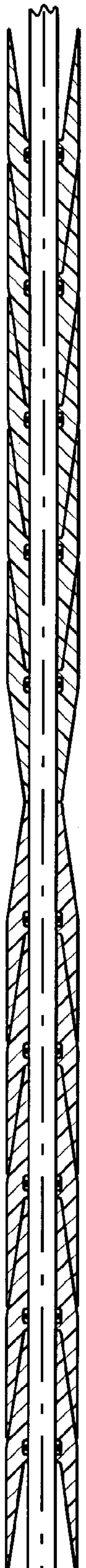

FIG. 9

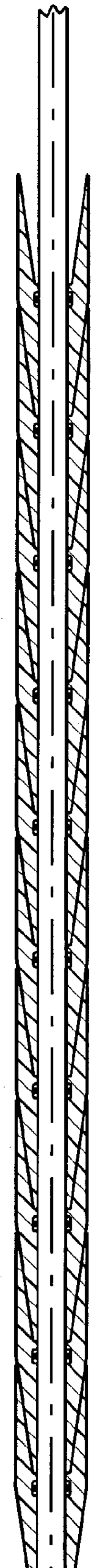

FIG. 10

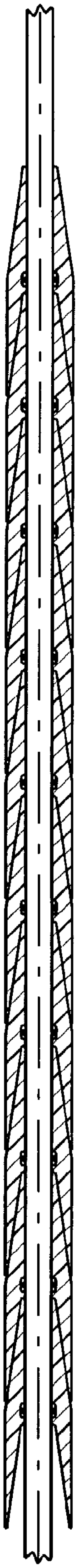

FIG. 11

HIGH EXPANSION PLUG WITH STACKED CUPS

FIELD OF THE INVENTION

[0001] The field of this invention is high expansion plugs for downhole use and more particularly made of a stack of nested elements that are compressed to grow from a run in size to the sealing dimension.

BACKGROUND OF THE INVENTION

[0002] In some cases a packer or plug needs to be run into a well through existing tubing and then set in much larger casing. The required expansion in such cases can be as much as about 300%, when comparing the run in diameter to the set diameter.

[0003] In the past, high expansion bridge plugs have employed a cylindrical tube that is longitudinally compressed between anti-extrusion barriers at opposed ends and is anchored to the casing wall. Several U.S. patents of Carisella illustrate this design, such as: U.S. Pat. Nos. 6,311,778, 6,318,461, and 6,164,375. The problem with such designs using a cylindrical sealing element is illustrated in **FIG. 1** showing how longitudinal compression creates an undesirable twisting of the element and the resultant formation of spiral leak paths along the outer periphery of the twisted sealing element.

[0004] Other designs developed by Schlumberger show an element that collapses on itself to seal in casing through tubing, as illustrated in U.S. Patent Re 32,831. In a later patent, Schlumberger acknowledges that the design in the '831 patent has limits in high expansion applications and offers up a design with multiple cup shaped seals where each adjacent seal is bigger than the one below it. When exposed to a compressive force, a protective sleeve for run in breaks away and the series of cups are forced inside each other. Further longitudinal compression forces the outer wall of the outermost cup to contact the surrounding casing. The other cups are nested inside the outer cup and allow the longitudinal compressive force to contact the casing wall without buckling inwardly. The patent that shows this system is U.S. Pat. No. 5,010,958. The problem with this system is that the outer cup does all the sealing. If it tears, despite the presence of the protective sleeve or if, for some reason the protective sleeve fails to rip during longitudinal compression, the ability of the unit to seal will be undermined.

[0005] Other patents reveal casing plugs that are not designed to go through tubing. These designs are not intended to grow much from run in to the set position. As a result, these designs do not employ anchors. Instead, they use very long elements made up of cup stacks that are slightly flexed to get sealing contact. These designs are shown in U.S. Pat. Nos. 1,662,336 and 2,217,038, both of which date back to a time well before through tubing operations were in use downhole. Other downhole plugs for applications that are not in through tubing are illustrated in U.S Pat. Nos. 5,293,905, 6,129,118, 6,142,227, and 6,182,755. Other downhole plug designs can be found in U.S. Pat. Nos. 5,775,429, 5,941,313, 6,145,598, and 6,305,477.

[0006] The present invention provides a through tubing plug that sets in casing and can withstand differential pressures in either direction. The sealing element is preferably made from a plurality of nested cups that act together in response to compression to expand as much as 300% or more from the run in dimension. A support system for the elements in the set position, as well as an anchor is provided to hold the set position. Those and other features of the present invention will be more readily appreciated from the description of the preferred embodiment and claims that appear below.

SUMMARY OF THE INVENTION

[0007] A through tubing casing plug is disclosed. It features a stack of nested cup shaped elements that initially slope to reduce the run in diameter. The stack is compressed to force the periphery of the nested cups to move outwardly so that the collective outer surfaces of the cups can seal on the casing. The cups have sufficient initial thickness so that they remain intact despite some radial growth resulting from the compression process. In a particular example, the run in dimension is 2.13 inches and the stack expands to seal against casing with an inside diameter of 6.9 inches while holding a differential of 500 pounds per square inch and more.

DETAILED DESCRIPTION OF THE DRAWINGS

[0008] **FIG. 1** is a section view of a prior art high expansion element in the run in position;

[0009] **FIG. 2** is the view of **FIG. 1** showing the prior art element twisting as it is compressed;

[0010] **FIG. 3** is the prior art element of **FIG. 2** after full compression and showing the exterior leak paths;

[0011] **FIG. 4** is a schematic depiction of the nested elements of the present invention in the run in position;

[0012] **FIG. 5** is the view of **FIG. 4** in the set position in casing;

[0013] **FIG. 6** is a section view of the entire tool in the run in position;

[0014] **FIG. 7** is the tool of **FIG. 6** in the set position;

[0015] FIGS. **8-11** illustrate a variety of stacking orientations for the nested elements.

DETAILED DESCRIPTION OF THE PREFERRED EMBODIMENT

[0016] **FIG. 1** shows a cylindrically shaped prior art element **10** around a mandrel **12** during run in. In **FIG. 2**, element **10** has started to twist under a compressive load, indicated schematically by arrows **14**. The exterior surface **16** assumes an undulating shape. In **FIG. 3**, the element is totally compressed into contact with the inner surface **18** of casing **20**. Formed from the fully compressed undulations in **FIG. 2** are a series of exterior leak paths **22** shown in **FIG. 3** on the exterior surface **16**. Thus, in the prior art design, regardless of the contact pressure against exterior surface **16** the leak paths **22** undermined the effectiveness of element **10** in the set position of **FIG. 3** due to the leak paths **22**.

[0017] The present invention, in the run in position, is shown in detail in **FIG. 4**. A stack of nested cups **24**, **26**, **28**, and **30** are illustratively shown. Those skilled in the art will appreciate that more or fewer cups can be used within the scope of the invention. While the preferred shape is stated as being a cup, other circular shapes, such as rings that can be similarly mounted, are within the scope of the present invention. A mandrel **32** extends through all the cups **24-30**. In the preferred embodiment, the rings **24-30** are identical. Cup **24** will be described in detail as typical of a stack having identical elements in the preferred embodiment shown in **FIG. 4**. Cup **24** has surface **34** that runs along mandrel **32**. Adjacent surface **34** is surface **36** that runs generally perpendicular to mandrel **32**. These two surfaces define a transition point between a cylindrical section **35** and a tapered section **37**. The presence of these discrete sections helps insure uniform flexing of all the tapered sections together so that the outer surfaces **40**, **48**, **50**, and **52** that define an outer cylindrical shape, grows uniformly minimizing relative lateral shifting among the elements of the stack **54**, until contact with the casing **58**. From there, inclined surface **38** extends to outer surface **40**. From there inclined surface **42** is generally parallel to inclined surface **38** and finally surface **44** is generally parallel to surface **36**. When stacked, surface **36** lands on surface **46** of cup **26**. Having surface **36** perpendicular to mandrel surface **32** will prevent cup **26** from extruding into the inner diameter of cup **24** as compressive load is applied. Outer surfaces **40**, **48**, **50**, and **52** are preferably in alignment to present a cylindrical shape to the assembled stack **54**. Note that the contact between surfaces **36** and **38** on one hand with surfaces **46** and **56** on the other hand helps to hold the relative positions of cups **24** and **26** to maintain the cylindrical outer shape as the stack **54** is compressed. Outer surfaces **40**, **48**, **50**, and **52** are then more likely to make simultaneous and uniform contact with casing **58**. When the stack **54** is compressed, the outer cylindrical shape moves out to a dimension of about 300% of its run in dimension or more to make sealing contact with the casing **58**, as shown in **FIG. 5**. Each member of the stack **54** seals on its exterior surface. Any leak paths along the mandrel **32** are stopped by a seal **60** found in each element of the stack **54**, as shown in FIGS. **8-11**.

[**0018**] FIGS. **8-11** show some different arrangements of stack **54**. **FIG. 8** shows uphole end **62** and downhole end **64** with the lowermost elements having pointed tips **66** and **68** pointing uphole. The uppermost elements of the stack have points **70** and **72** looking downhole. In **FIG. 9**, the lower end of the stack is looking downhole **64** while the upper end of the stack is oriented uphole **62**. In **FIG. 10** all the elements are oriented downhole **64**. In **FIG. 11** they are all oriented uphole **62**. Other combinations of orientations are contemplated within the scope of the invention.

[**0019**] **FIG. 6** shows the entire tool in the run in position. Beginning at the uphole end, there is an anchor assembly **74** that has a linkage **76** with teeth **78** that grab casing **58** in the set position shown in **FIG. 7**. On both ends of the stack **54** are petal type retaining members **80** and **82** that collapse on themselves upon compression to provide anti-extrusion barriers for the stack **54**. Looking at **FIG. 7**, it can be seen that the elements of stack **54** which were all oriented downhole during run in have either flattened close to the downhole end or have come close to inverting near the uphole end, when compared to their run in orientation. Each element of stack **54** is energized from the compression into firm contact with casing **58**. The resulting undulation when looking at the elements in section after compression increases the available contact force driving the outer edge of each element of the stack **54** into contact with the interior of the casing **58**.

[**0020**] The preferred material of the stack cups is rubber but other materials compatible with the expected differential pressures and operating temperatures can be used. Differential pressures withstood can vary depending on the degree of expansion. For a stack that expands from 2.13 inches to a casing inside diameter of 6.9 inches the expected ability to withstand differential pressures is in excess of 500 pounds per square inch. That level of expansion is in the order of greater than 300%.

[**0021**] The foregoing disclosure and description of the invention are illustrative and explanatory thereof, and various changes in the size, shape and materials, as well as in the details of the illustrated construction, may be made without departing from the spirit of the invention.

We claim:

1. A plug for downhole use, comprising:

a mandrel;

a sealing element mounted to said mandrel and movable between a run in and a set position, said set position defined by an outer diameter over 150% of the sealing element diameter in the run in position, said sealing element, in said run in position, comprising a stack of nested rings;

an anchor, which extends for downhole fixation of said mandrel with said sealing element in said set position as a result of relative movement with respect to said mandrel which movement also compresses said stack of nested rings.

2. The plug of claim 1, wherein:

said stack of rings each having an outer periphery that is moved away from said mandrel by extension movement of said anchor.

3. The plug of claim 2, wherein:

said rings each define an opening through which said mandrel extends and said outer periphery is rotated away from said mandrel in an arc centered in said opening

4. The plug of claim 2, wherein:

the outer periphery of a plurality of said rings provides sealing capability in the wellbore in said set position.

5. The plug of claim 4, wherein:

the outer periphery of all said rings provides sealing capability in the wellbore in said set position.

6. The plug of claim 1, wherein:

the difference in outer diameter of said stack of nested rings is greater than 300% when comparing the run in to the set position.

7. The plug of claim 6, wherein:

said sealing element withstands pressure differentials of at least 500 pounds per square inch in said set position.

8. The plug of claim 1, wherein:

at least one of said stack of nested rings further comprises a seal for an opening in said ring that the mandrel passes through.

9. The plug of claim 1, wherein:

all said rings in said stack of nested rings are oriented in the same direction

10. The plug of claim 1, wherein:

at least one of said stack of nested rings is oriented in an opposite direction from another in said stack of nested rings.

11. The plug of claim 2, wherein:

said outer peripheries of said nested rings define a cylindrical shape that grows uniformly until initial contact in the wellbore.

12. The plug of claim 1, wherein:

adjacent nested rings contact each other on at least two discrete surfaces.

13. The plug of claim 12, wherein:

a transition between said discrete surfaces is located adjacent said mandrel to define a cylindrical segment of each ring adjacent said mandrel and a tapered segment extending from said cylindrical segment.

14. The plug of claim 13, wherein:

said tapered segments are flexed in unison to achieve said set position while said cylindrical segments are compressed together at the same time.

15. The plug of claim 5, wherein:

the difference in outer diameter of said stack of nested rings is greater than 300% when comparing the run in to the set position.

16. The plug of claim 15, wherein:

said sealing element withstands pressure differences of at least 500 pounds per square inch in said set position.

17. The plug of claim 16, wherein:

said outer peripheries of said nested rings define a cylindrical shape that grows uniformly until initial contact in the wellbore.

18. The plug of claim 17, wherein:

adjacent nested rings contact each other on at least two discrete surfaces.

19. The plug of claim 18, wherein:

a transition between said discrete surfaces is located adjacent said mandrel to define a cylindrical segment of each ring adjacent said mandrel and a tapered segment extending from said cylindrical segment.

20. The plug of claim 18, wherein:

said tapered segments are flexed in unison to achieve said set position while said cylindrical segments are compressed together at the same time.

* * * * *