J. K. SHARPE, Jr.

PNEUMATIC STACKER.

APPLICATION FILED APR. 10. 1909.

1,014,778.

Patented Jan. 16, 1912.

3 SHEETS—SHEET 1.

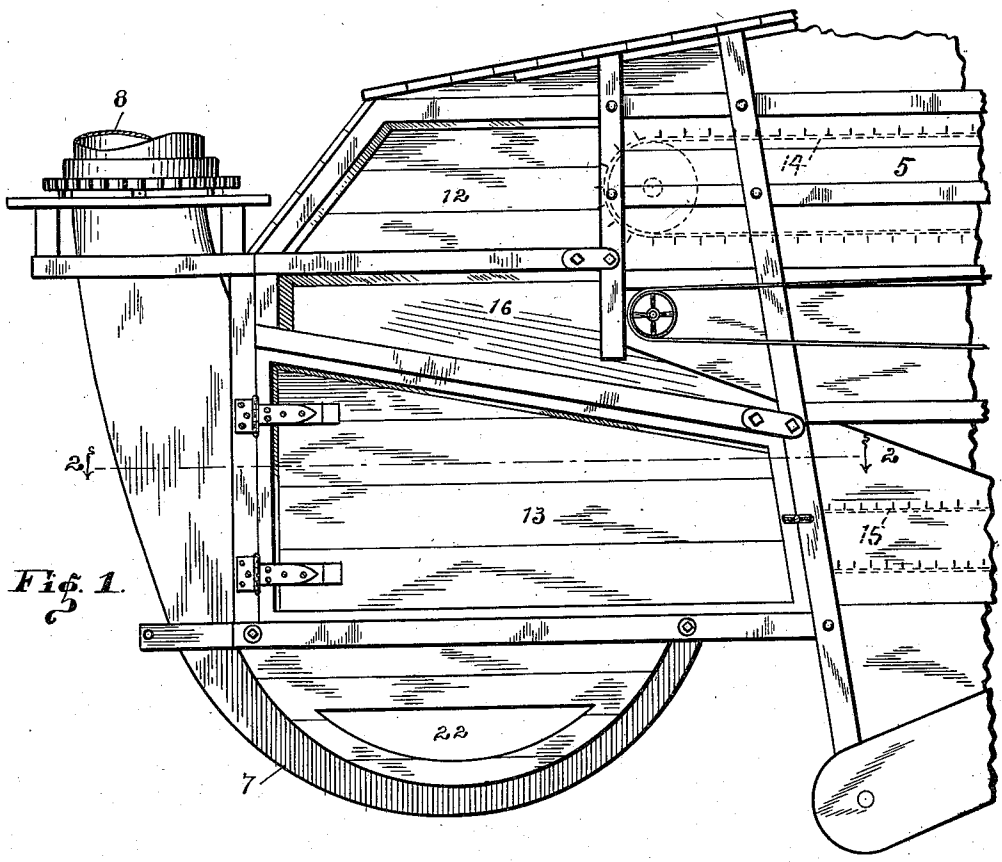

Fig. 1.

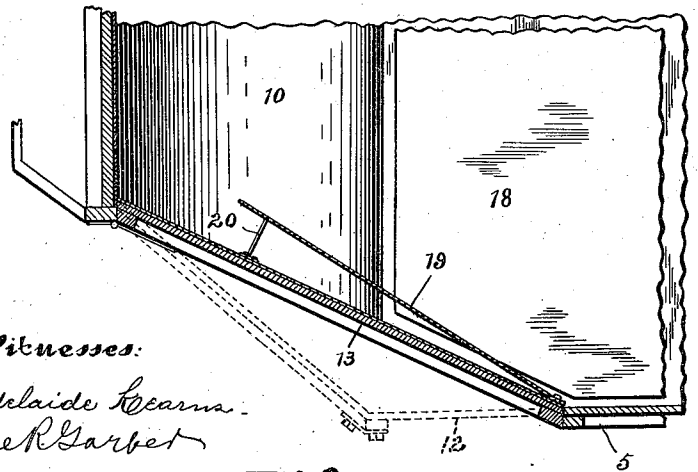

Fig. 2.

Witnesses:
Adelaide Kearns.
Lee R. Garbet

Inventor
Joseph K. Sharpe Jr.
By James A. Walsh.
Attorney

J. K. SHARPE, Jr.

PNEUMATIC STACKER.

APPLICATION FILED APR. 10, 1909.

1,014,778.

Patented Jan. 16, 1912.

3 SHEETS—SHEET 2.

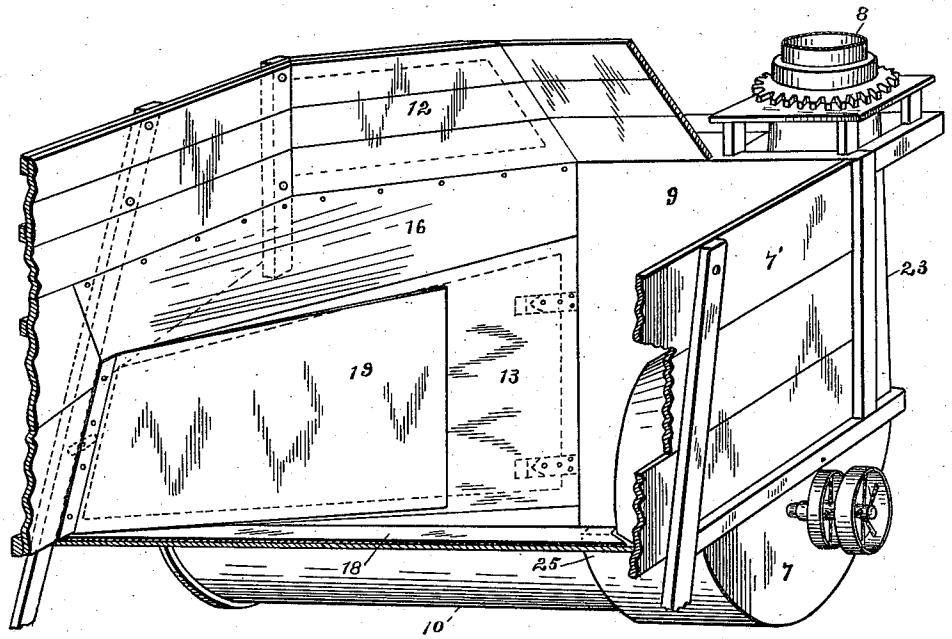

Fig. 3.

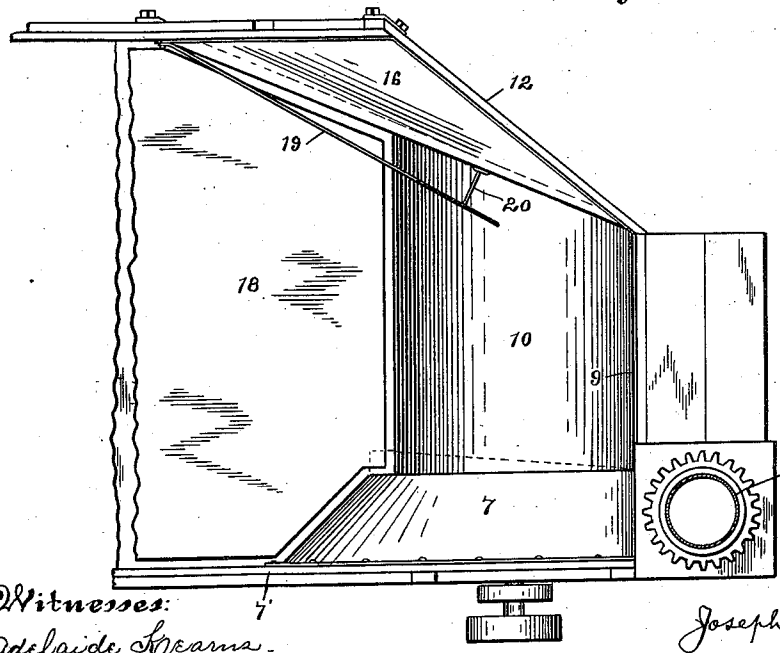

Fig. 4.

Witnesses:
Adelaide Kearns.
Lee R. Garber

Inventor
Joseph K. Sharpe, Jr.
By James A. Walsh,
Attorney

J. K. SHARPE, Jr.

PNEUMATIC STACKER.

APPLICATION FILED APR. 10, 1909.

1,014,778.

Patented Jan. 16, 1912.

3 SHEETS—SHEET 3.

Fig. 5.

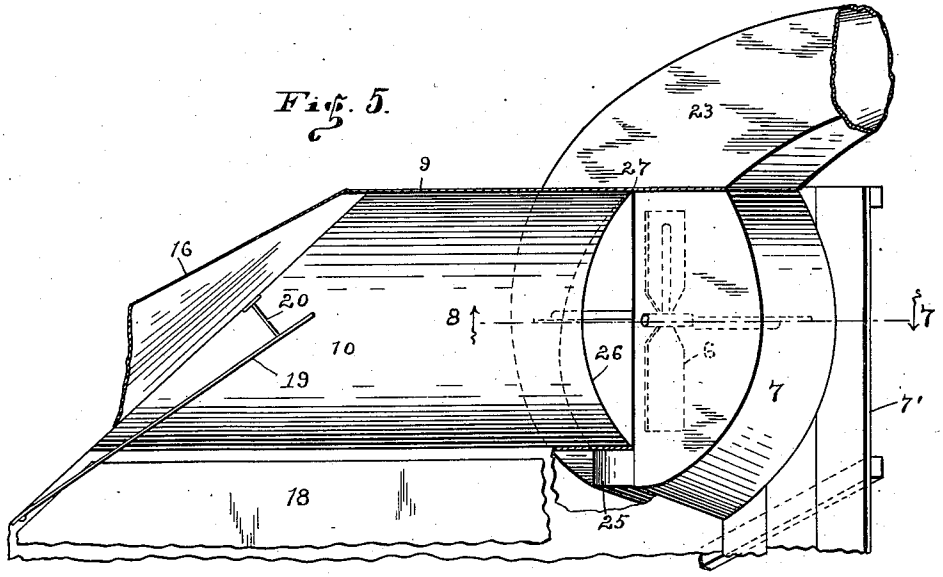

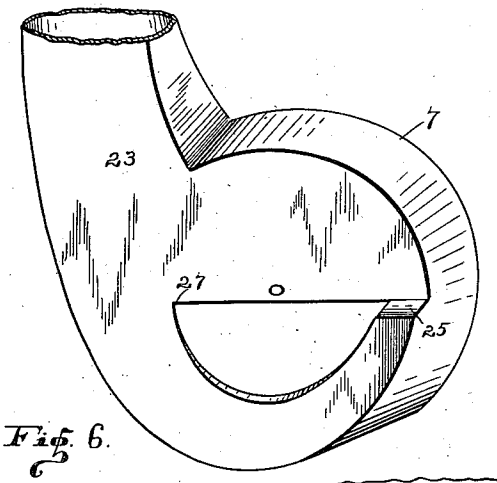

Fig. 6.

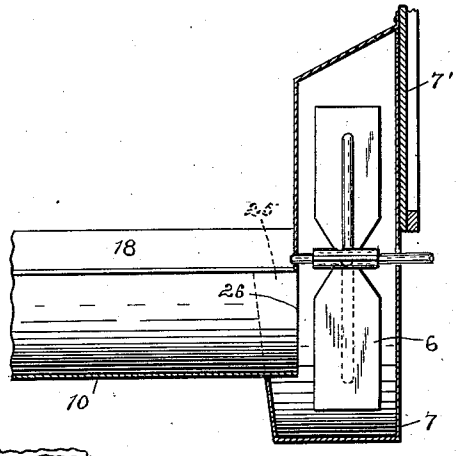

Fig. 7.

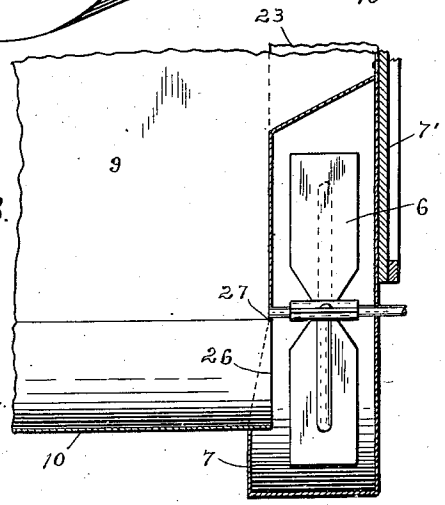

Fig. 8.

Witnesses:

Adelaide Kearns.

Lee R. Garber

Inventor

Joseph K. Sharpe, Jr.

By James A. Walsh,

Attorney.

UNITED STATES PATENT OFFICE.

JOSEPH K. SHARPE, JR., OF INDIANAPOLIS, INDIANA, ASSIGNOR TO THE INDIANA MANUFACTURING COMPANY, OF INDIANAPOLIS, INDIANA, A CORPORATION OF WEST VIRGINIA.

PNEUMATIC STACKER.

1,014,778. Specification of Letters Patent. Patented Jan. 16, 1912.

Application filed April 10, 1909. Serial No. 489,056.

To all whom it may concern:

Be it known that I, JOSEPH K. SHARPE, Jr., a citizen of the United States, residing at Indianapolis, in the county of Marion and State of Indiana, have invented certain new and useful Improvements in Pneumatic Stackers, of which the following is a specification.

My said invention relates to pneumatic stackers of that type embodying a vertically-arranged side fan, and it consists in certain improvements in the general construction and arrangement of the material-receiving chamber and fan whereby I am enabled to efficiently direct material immediately into the influence of the suction air current created by said fan, without the employment of mechanical conveyers or inclined hoppers, which are necessary in the capacious material-receiving chambers which form part of such pneumatic stackers as ordinarily constructed and in common use.

In the accompanying drawings, which form a part hereof, Figure 1 is a side elevation showing a portion of a threshing machine with my improved stacker applied thereto; Fig. 2 a detail section on the dotted line 2—2 in Fig. 1; Fig. 3 a perspective view of said stacker; Fig. 4 a plan; Figs. 5 and 6 perspective views of portions of said stacker; and Figs. 7 and 8 are detail sectional views on the dotted lines 7 and 8, respectively, in Fig. 5.

As is well known by those experienced in threshing grain, and discharging the threshed straw, chaff, dust, &c., from the separator by pneumatic stackers, the discharging material is in varying condition, rendering it difficult at times to be properly directed toward the stacker fan. My object, therefore, is to provide a straw chamber which will be materially contracted in width as compared with well known structures of the kind and so related to the stacker fan as to insure a highly effective suction throughout the entire hopper of the chamber, and the retention of the air blast within the fan housing so as to prevent its lateral escapement (commonly known as back lash) into the hopper and guiding such blast around under the end of said hopper to its proper point of discharge through the fan outlet.

In said drawings the portions marked 5 represent a fragment of a separator with my improved stacker attached. The stacker fan, 6, as is usual, is mounted in a housing, 7, at one side, 7′, of the material-receiving chamber. As indicated in Fig. 3, the hopper, 10, is preferably of a simple concave form horizontally arranged transversely of the lower end of the chamber. As material descends toward or into a stacker hopper it is necessary that it be positively directed into the influence of the intake suction air current of the stacker fan, which suction is created within a limited area only in the hopper at the fan side thereof, in stackers as ordinarily constructed, and because of the extreme width of the hopper it is necessary to provide conveyers, inclined hoppers or other devices for directing the material toward the fan. By practical test I have discovered that by converging the chamber from its front to its rear end, thus producing a contracted chamber, I am enabled to efficiently and positively direct the material instantly into the influence of the fan without the aid of such constructions as hereinbefore referred to; and in my preferred form I arrange the wall opposite the stacker fan diagonally from approximately its junction with the separator to the rear wall 9 of the straw chamber. In the construction shown the upper portion, 12, of said diagonal wall may be a solid structure, while in its lower portion I provide a door, 13, which latter arrangement is of considerable advantage in that it provides ready access to the separator for the removal or adjustment of sieves or other structures, which in common types of combined separators and stackers must with difficulty be removed through the roof above the straw chamber.

In the type of separator chosen for illustration the straw conveyer, 14, shown in dotted lines, terminates near the upper junctional point of the separator and stacker, while the winnowers, 15, in the lower portion terminate a considerable distance from the upper or tail end of the separator (also indicated in dotted lines), and for practical applicability of my improved stacker to such a separator I so arrange the upper portion 12 of the straw chamber as to slightly project laterally beyond the lower portion 13, as indicated in Fig. 4 (and by dotted lines in Fig. 2) to accommodate the large masses of discharging material, and connect

said upper portion to the lower by a suitable filler, 16, of sheet metal or other material, so that the diagonal deflecting wall comprising said structures will be substantially continuous throughout its entire dimensions. However, while I have shown and described my invention as applied to such a separator, it will be understood that in separators wherein the conveying and separating mechanisms terminate in substantially the same vertical plane the deflecting wall may in its entirety be a substantially plane surface, that is, without offsets or irregularities, and my invention contemplates such a deflector.

As will be readily understood, in the operation of stackers the greater volume of material is discharged from the upper conveyers into the stacker chamber, while chaff and small particles are discharged from the winnowers over an apron, 18, and become mingled with and discharged with the straw. As this latter material is very light and a large portion thereof is discharged into the hopper at the side thereof farthest from the fan (where in some instances it would be out of its influence) I have provided a chaff deflector, 19, extending from a point near the termination of the winnowers (or attached to the door in said diagonal wall as indicated) rearwardly across said apron in the direction of the wall of the stacker chamber but gradually diverging therefrom, and which may be held outwardly from said wall by a brace, 20, of any desired character, all for a purpose which will presently appear.

By contracting the straw chamber I am enabled to materially reduce the transverse width of hopper 10, and by providing an opening, 22, in the side of the chamber opposite the fan such a supply of air is received directly from the exterior as to insure that a powerful suction air current is created throughout the entire length and breadth of the hopper of such force that all material falling in any part thereof is instantly withdrawn by the fan and discharged, which is of material advantage in handling either fluffy, wet or sluggish material.

Much difficulty is experienced in operating pneumatic stackers by reason of back lash in the hopper, principally caused by failure of the stacker fan to retain the air blast within the housing until it reaches the fan discharge outlet, 23, leading to the stacker chute 8, the air flowing out at one or more points in the hopper and interfering with the proper suction and discharge of the material. To obviate this difficulty I construct the lower front portion, 25, of the fan casing wider than the upper and rear portion thereof, that is, voluted, so that the housing assumes a partially helical form, and insert the end, 26, of hopper 10 over said volute portion, the result being that the end of said hopper constitutes a tapering flange or air container widest at its front side and terminating, at 27, at the point of discharge of the blast into the fan outlet.

The fan wings when rotating through the upper portion of the casing travel forwardly, that is, rotate toward the separator, gathering and compressing air in their travel and carrying the same downwardly and rearwardly through the casing to be discharged through outlet 23. In common types of stacker fans such compressed air while being propelled downwardly and rearwardly has a tendency to expand laterally into the hopper. By my arrangement, however, when the compressed air reaches the widened portion of the flange or air container at 25 it expands laterally under said flange and is confined therebeneath and becomes gradually further compressed while being carried along to the terminus 27 of said flange, whence it is directed into the fan outlet and therefrom into the chute, so that in this manner the blast is positively confined while passing through the lower portion of the fan casing and lateral escapement thereof (or back lash) in the hopper is prevented.

As hereinbefore indicated, straw is discharged from the separator in large volumes, and by reason of the side wall or deflector which I employ, and its close proximity to the fan, I produce a contracted chamber which insures that the oncoming material is at all times positively directed into the immediate influence of the stacker fan, and its instant withdrawal thereinto is further insured by the large volume of suction current created in the hopper by its reduced transverse width and the opening therein opposite the fan. As the greater portion of chaff and small particles is discharged from the lower portion of the separator by the winnowers, it will be readily understood that by employing the deflector 19 the material discharging in that vicinity strikes said deflector and is turned thereby toward and into the fan; and by the flanged intake opening of the fan hereinbefore described my construction of stacker is capable of readily and efficiently withdrawing and discharging large quantities of material under all conditions, as no lateral escapement (or back lash) of the air blast occurs to interfere with the proper entrance of the material into the fan.

I claim as my invention:

1. The combination, in a pneumatic stacker, of a material-receiving chamber embodying a substantially vertical side wall inclined from the front to the rear of said chamber toward the opposite side wall thereof, a vertically-arranged fan in said

chamber at the side thereof opposite to said inclined wall, and a hopper in the lower end of said chamber.

2. The combination, in a pneumatic stacker, of a material-receiving chamber having a vertically-arranged fan at one side thereof and a substantially vertical wall opposite said fan inclined from the front to the rear of said chamber toward said fan, and a hopper in said chamber communicating with said fan and having an air inlet in its side opposite said fan.

3. The combination, in a pneumatic stacker, of a material-receiving chamber having a substantially vertical wall inclined from the front to the rear of said chamber, a vertically arranged fan in the side of said chamber opposite to said wall, a hopper in said chamber communicating with said fan, and a chaff deflector in said chamber opposite said fan for directing material thereinto.

4. The combination, in a pneumatic stacker, of a material-receiving chamber embodying a substantially vertical side wall inclined from the front to the rear of said chamber toward the opposite side wall thereof, a vertically-arranged fan in said chamber at the side thereof opposite to said inclined wall, a hopper in the lower end of said chamber, and a chaff deflector in said chamber opposite said fan for directing material thereinto.

5. The combination, in a pneumatic stacker, of a material-receiving chamber having a substantially vertical side wall inclined from the front to the rear of said chamber and toward its opposite side wall and having a door therein, a fan in said chamber at the side thereof opposite to said substantially vertical wall, and a hopper in said chamber communicating with said fan and having an air inlet in its side opposite said fan.

6. The combination, in a pneumatic stacker, of a material-receiving chamber, a vertically-arranged fan in one side thereof the housing whereof converges from its lower front side rearwardly, and a hopper in said chamber one end of which projects through the convergent portion of said housing and forms a flange therein tapering from the front of said housing to its discharge outlet.

7. The combination, in a pneumatic stacker, of a material-receiving chamber embodying a side wall inclined from the front to the rear of said chamber in the direction of its opposite side wall, a stacker fan casing at the side of said chamber opposite to said inclined wall and having its lower portion convergent from front to rear side, and a hopper projecting beyond said lower casing portion to form a tapering air container.

8. In a pneumatic stacker, a helically formed fan-housing voluted in the direction of its outlet, and a flange associated with said volute portion to form a tapered air container in said housing.

9. The combination, with a separator, of a pneumatic stacker comprising a material-receiving chamber one of the side walls whereof is in substantially the same plane as a side wall of the separator and the opposite wall of which inclines from said separator to the rear wall of and toward the opposite side wall of said chamber; a fan associated with said first-mentioned wall; and a hopper in said chamber communicating with said fan and forming a flange therein widest at its front end and terminating in tapered form at the discharge outlet of said fan.

In testimony whereof I affix my signature in presence of two witnesses.

JOSEPH K. SHARPE, JR.

Witnesses:

LEE R. GARBER,

WALTER J. TINGLE.

Copies of this patent may be obtained for five cents each, by addressing the "Commissioner of Patents, Washington, D. C."