(12) INTERNATIONAL APPLICATION PUBLISHED UNDER THE PATENT COOPERATION TREATY (PCT)

(19) World Intellectual Property Organization
International Bureau

(43) International Publication Date
9 January 2014 (09.01.2014)

WIPO | PCT

(10) International Publication Number
WO 2014/008467 A1

(51) International Patent Classification:
G06F 3/12 (2006.01)

(21) International Application Number:
PCT/US2013/049440

(22) International Filing Date:
5 July 2013 (05.07.2013)

(25) Filing Language: English

(26) Publication Language: English

(30) Priority Data:
61/668,959 6 July 2012 (06.07.2012) US
13/935,104 3 July 2013 (03.07.2013) US

(71) Applicant: **MARVELL WORLD TRADE LTD.** [BB/BB]; L' Horizon, Gunsite Road, Brittons Hill, St. Michael 14027 (BB).

(72) Inventors; and
(71) Applicants : **ZIMMERMAN, Gary, D.** [US/US]; 90 Blue Shadow Drive, Garden Valley, ID 83622 (US). **MONTIERTH, Mark, D.** [US/US]; 7175 North Springcrest Place, Meridian, ID 83646 (US). **ALLEN, Greg, L.** [US/US]; 9857 West Alliance Drive, Boise, ID 83704 (US). **BLEDSOE, J., Daren** [US/US]; 462 Shannon Drive, Albany, OR 97321 (US). **HALL, Lyman, Leonard** [US/US]; 7486 Alpine Drive, Nampa, ID 83687 (US).

(74) Agents: **LEE, Lewis, C.** et al.; Lee & Hayes, PLLC, 601 W. Riverside Ave, Suite 1400, Spokane, WA 99201 (US).

(81) Designated States *(unless otherwise indicated, for every kind of national protection available)*: AE, AG, AL, AM, AO, AT, AU, AZ, BA, BB, BG, BH, BN, BR, BW, BY, BZ, CA, CH, CL, CN, CO, CR, CU, CZ, DE, DK, DM, DO, DZ, EC, EE, EG, ES, FI, GB, GD, GE, GH, GM, GT, HN, HR, HU, ID, IL, IN, IS, JP, KE, KG, KN, KP, KR, KZ, LA, LC, LK, LR, LS, LT, LU, LY, MA, MD, ME, MG, MK, MN, MW, MX, MY, MZ, NA, NG, NI, NO, NZ, OM, PA, PE, PG, PH, PL, PT, QA, RO, RS, RU, RW, SC, SD, SE, SG, SK, SL, SM, ST, SV, SY, TH, TJ, TM, TN, TR, TT, TZ, UA, UG, US, UZ, VC, VN, ZA, ZM, ZW.

(84) Designated States *(unless otherwise indicated, for every kind of regional protection available)*: ARIPO (BW, GH, GM, KE, LR, LS, MW, MZ, NA, RW, SD, SL, SZ, TZ, UG, ZM, ZW), Eurasian (AM, AZ, BY, KG, KZ, RU, TJ, TM), European (AL, AT, BE, BG, CH, CY, CZ, DE, DK, EE, ES, FI, FR, GB, GR, HR, HU, IE, IS, IT, LT, LU, LV, MC, MK, MT, NL, NO, PL, PT, RO, RS, SE, SI, SK, SM, TR), OAPI (BF, BJ, CF, CG, CI, CM, GA, GN, GQ, GW, KM, ML, MR, NE, SN, TD, TG).

Published:
— *with international search report (Art. 21(3))*

(54) **Title**: METHODS AND APPARATUS FOR INTERFACING A HOST DEVICE TO A PERIPHERAL DEVICE IN ORDER TO INCREASE CONSUMPTION OF CONSUMABLE PRODUCTS BY THE PERIPHERAL DEVICE

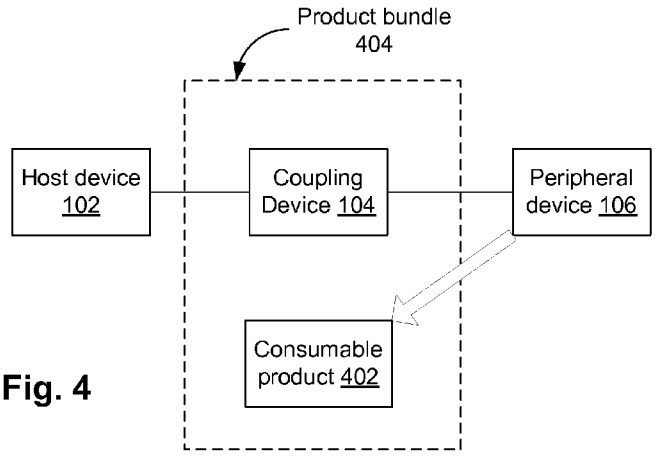

Fig. 4

(57) **Abstract**: Some of the embodiments of the present disclosure provide a method comprising providing an apparatus, wherein the apparatus is configured to be coupled to (i) a peripheral device and (ii) a host device. The apparatus includes memory configured to store logic, wherein the logic is configured to (i) allow the host device and the peripheral device to communicate with each other and (ii) operate the peripheral device. The apparatus further includes a processor configured to execute the logic. The method further comprises bundling the apparatus with a consumable product for sale with the consumable product, wherein the consumable product is configured to be consumed by the peripheral device.

WO 2014/008467 A1

METHODS AND APPARATUS FOR INTERFACING A HOST DEVICE TO A PERIPHERAL DEVICE IN ORDER TO INCREASE CONSUMPTION OF CONSUMABLE PRODUCTS BY THE PERIPHERAL DEVICE

Cross Reference to Related Applications

[0001] This claims priority to U.S. Patent Application No. 13/935,104 filed July 3, 2013 which claims priority to U.S. Provisional Patent Application No. 61/668,959, filed on July 06, 2012, which is incorporated herein by reference.

Technical Field

[0002] Embodiments of the present disclosure relate to use of peripheral devices with host computing devices and more particularly, to encouraging increased use of older printing devices with more recent computing devices in order to increase consumption of consumable products by the older printing devices.

Background

[0003] An original equipment manufacturer (or OEM) generally purchases, for use in its own products, one or more components that are typically manufactured by another company. For example, original equipment manufacturers of printers (e.g., multi-function printers including print, scan, and/or fax capabilities) may incorporate various components from several other companies in creating final products for sale to customers. Original equipment manufacturers of printers generally have a very large base of installed customers – i.e.,

consumers who are currently using printers that have been previously purchased by the consumers. These installed customers often have older model printers that may not have as many features or as much functionality as the newer model printers being currently offered by the printer OEMs. For example, older model printers may not include newer features or technologies such as wireless capabilities, mobile printing, "Cloud" access, etc. As a result, installed customers with older model printers generally do not print as often and thus, their printers generally consume less consumable products, e.g., ink, toner, paper, etc. This results in lower revenues being generated by printer OEMs as printer OEMs tend to generate a significant portion of revenues due to the consumption of such consumable products. Additionally, many of the installed customers that have older model printers may not purchase a newer model printer because such customers may be currently content with the existing capabilities of the older model printers.

Summary

[0004] In various embodiments, the present disclosure provides a method comprising providing an apparatus, wherein the apparatus is configured to be coupled to (i) a peripheral device and (ii) a host device. The apparatus includes memory configured to store logic, wherein the logic is configured to (i) allow the host device and the peripheral device to communicate with each other and (ii) operate the peripheral device. The apparatus further includes a processor configured to execute the logic. The method further comprises bundling the apparatus with a consumable product for sale with the consumable product, wherein the consumable product is configured to be consumed by the peripheral device.

[0005] In various embodiments, the present disclosure provides a combination of items comprising an apparatus, wherein the apparatus is configured to be coupled to (i) a peripheral device and (ii) a host device. The apparatus also includes memory configured to store logic, wherein the logic is configured to (i) allow the host device and the peripheral device to communicate with each other and (ii) operate the peripheral device. The apparatus further includes a processor configured to execute the logic. The combination of items further comprises a consumable product, wherein the consumable product is configured to be consumed by the peripheral device.

Brief Description of the Drawings

[0006] In the following detailed description, reference is made to the accompanying drawings which form a part hereof wherein like numerals designate like parts throughout, and in which is shown by way of embodiments that illustrate principles of the present disclosure.

[0007] Fig. 1 schematically illustrates a host device coupled to a peripheral device via a coupling device.

[0008] Fig. 2 schematically illustrates an example of the coupling device of Fig. 1.

[0009] Fig. 3 schematically illustrates a plurality of host devices coupled to the peripheral device via the coupling device.

[0010] Fig. 4 schematically illustrates an arrangement of a product bundle that includes the coupling device and a consumable product that is consumed by the peripheral device.

[0011] Fig. 5 is a flow diagram illustrating an example method of increasing use of consumable products by users of peripheral devices.

Detailed Description

[0012] Fig. 1 illustrates an arrangement 100 that includes a host device 102, a coupling device 104, and a peripheral device 112. The host device 102 generally is a computing device that includes computing capabilities. Such computing devices include, for example, desktop computers, tower computers, laptop computers, notebook computers, tablet computers, personal digital assistants (PDAs), and mobile phones. This list of possible computing devices is provided merely as an example and is not meant to be limiting. The peripheral device 106 is a device for use with a computing device. Such peripheral devices include, for example, printing devices, scanning devices, and multi-function printing devices that are capable of printing, scanning, faxing, and other functions. The peripheral device 106 may be another type of device and the list provided is merely for example and not meant to be limiting. For clarity and ease of understanding, the host device 102 will be referred to herein as the computing device 102 and the peripheral device 106 will be referred to herein as the printing device 106.

[0013] The coupling device 104 couples the computing device 102 and the printing device 106. The coupling is at least a communicative coupling, but can also be a physical coupling. Thus, the coupling device 104 provides a communication conduit between the computing device 102 and the printing device 106.

[0014] Referring to Fig. 2, the coupling device 104 generally includes a processor 202, a memory 204, and one or more interfaces 206. The processor 202 can be in the form of one or more processors, multi-processing cores, etc., that can be configured as a system on chip (SOC). More particularly, the processor 202 can be configured as a printer SOC. The memory 204 can

include various types of memory such as, for example, random access memory (RAM), flash memory, etc. The interfaces 206 can include multiple types of communication interfaces such as, for example, a Universal Serial Bus (USB) communication interface 206a, a Wi-Fi communication interface 206b, a Bluetooth communication interface 206c, and/or a local access network (LAN) communication interface 206d. The list of communication interfaces is merely an example of the possibilities and is not meant to be limiting.

[0015] The coupling device 104 can be coupled to the printing device 106 via a wireless connection or a wired connection, via one of the interfaces 206. Likewise, the coupling device 104 can be coupled to the computing device 106 via a wireless connection or a wired connection, via one of the interfaces 206.

[0016] For older printing devices, there may be a very limited number of ways for a device to couple to and communicate with the older printing devices. In general, most older printing devices need to be physically coupled to a host computing device via a wired connection. Thus, the coupling device 104 can be physically coupled to the printing device 106 via a cable (not illustrated) extending from the coupling device 104 to the printing device 106. The cable (not illustrated) can include a USB type plug that may be plugged into a USB port of the printing device 106. Other types of physical connections may be utilized depending upon the type of ports included on the printing device 106 and the interfaces 206 included with the coupling device 104. Furthermore, if the printing device 106 includes wireless capabilities, then the coupling device 104 can be coupled to the printing device 106 via a wireless connection, depending upon the interfaces 206 included with the coupling device 104. In various embodiments, the coupling device 106 can be physically attached and wired directly to the

printing device 106 such that the printing device 106 and the coupling device 104 are a single, integrated unit, i.e. the coupling device 104 is part of the printing device 106.

[0017] Depending upon the connection capabilities of the computing device 102, the computing device 102 can be coupled to the coupling device 104 via various types of connections through one of the interfaces 206 of the coupling device 104. For example, depending upon the interfaces 206 included with the coupling device 104, the computing device 102 can be coupled to the coupling device 104 via a USB connection, a Wi-Fi connection, a Bluetooth connection, a LAN connection, etc. Thus, the computing device 102 can be coupled to the coupling device 104 via either a wired connection (an appropriate cable between the coupling apparatus 104 and the computing device 102) or a wireless connection.

[0018] Accordingly, the coupling device 104 may include one or more cables (not illustrated) permanently coupled to the coupling device 104. The one or more cables are each configured with an appropriate connector, i.e. USB plugs, to be used to couple the coupling device 104 to the printing device 106 and/or the computing device 102. The coupling device 104 may also include one or more input/output (I/O) ports (not illustrated) to allow for detachable cables (not illustrated) configured with appropriate connectors, e.g., USB plugs, to be used to couple the coupling device 104 to the printing device 106 and/or the computing device 102. The various types of interfaces, cables and/or I/O ports allow for a variety of connection options via the coupling device 104 between the printing device 106 and the computing device 102.

[0019] The coupling device 104 includes logic in the form of software and/or firmware, stored in the memory 204, configured to provide functionality to the printing device 106 and,

depending upon the application, the computing device 102. For example, logic can be included in the coupling device 104 that, as previously described, provides the ability for various types of connections via interfaces 206 of the coupling device 104 between the printing device 106 and the computing device 102. For example, if the printing device 106 does not have wireless capabilities, a wireless access interface can be included with the coupling device 104, as well as the appropriate software and/or firmware. The coupling device 104 can be coupled to the printing device 106 via a wired connection and the coupling device 104 can communicate with the computing device 102 via the wireless access interface. Thus, the computing device 102 can interact with the printing device 106 wirelessly. For example, the interfaces 206 of the coupling device 104 can include wireless access interfaces such as, for example, a Bluetooth interface, a Wi-Fi/Wi-Fi-direct interface, etc., along with the appropriate logic in memory 204. Additionally, as can be seen in Fig. 3, multiple computing devices 302a, 302b, 302c, can also interact with the printing device 106 via wireless connections with the coupling device 104 due to the presence of the wireless access interfaces. Thus, a user's other computing devices, such as, for example, a laptop computer, a notebook computer, a tablet computer, a personal digital assistant (PDA), and a mobile phone, etc. could be used to interact with the printing device 106 via the coupling device 104 via a wireless connection. Thus, the coupling device 102 adds wireless capabilities to the printing device 106 that allow for a variety of other computing devices to interact with the printing device 106.

[0020] If the coupling device 104 includes a LAN interface and corresponding logic included within memory 204, the computing device 102 and the printing device 104 can communicate with other devices included within the LAN via the coupling device 104. Likewise, the other

devices included within the LAN can communicate with the computing device 102 and the printing device 104 via the coupling device 104. Thus, the coupling device 104 can add LAN connectivity to the printing device 106 for a local access networks for multiple computing devices if desired.

[0021] Additionally, logic in the form of software and/or firmware can be included within memory 204 of the coupling device 104 to enable automatic printing via the printing device 106. For example, the logic can be included to cause the coupling device 104 to automatically access and retrieve documents from various locations within a network such as, for example, the Internet, the Cloud, a wireless service, etc. Logic can be further included on the coupling device 104 to convert retrieved documents so that they can be printed by the printing device 106. Such automatic retrieval and printing of jobs can be scheduled directly by the logic included on the coupling device 104 to automatically retrieve content from the network, convert the content for printing, and print the content.

[0022] Software and firmware for the coupling device 104 can be automatically upgraded based upon access to various networks by the coupling device 104. Likewise, software for the coupling device 104 can be automatically installed on the coupling device 104 based upon access to various networks by the coupling device 104. Accordingly, software such as, for example, drivers related to the printing device 106 for various computing devices, can be automatically installed onto the coupling device 104. Likewise, software for various other types of computing devices, such as, for example, PDAs and mobile phones, etc., can be auto-installed onto the coupling device 104. The software for the various computing devices installed on the coupling device 104 allows the coupling device 104 to receive a print job from a

particular computing device, convert the print job to the appropriate format for the printing device 106 and forward the print job to the printing device 106 for printing. Thus, the coupling device acts as a pass-through device that allows for communication between the printing device 106 and a variety of computing devices 102.

[0023] Power can be provided for the coupling device 104 via a USB connection with the printing device 106. Additionally, if the coupling device 104 is directly coupled, i.e., wired, to the printing device 106, then power can also be received from the printing device 106. Additionally, a separate AC power connection can be provided for the coupling device 104. Large capacitors (not illustrated), often referred to as "super CAPs," can also be included within the coupling device 104 to store power received from the USB connection to be used in the future in place of or in conjunction with power received from the USB connection to help ensure that ample power is provided for the coupling device 104.

[0024] Use of a coupling device 104 with an older type printing device 106 can provide greater functionality and use of the printing device 106 for a user of the printing device 106. Thus, the coupling device 104 generally serves as a print controller. Thus, use of the printing device 106 will increase and therefore, use of consumable products, such as, for example, ink, toner, paper, etc., will also increase. The increase in use of consumable products will thereby lead to larger sales and revenues for OEMs of such older printing devices 106.

[0025] Referring to Fig. 4, as incentive to increase the consumption of such consumable products, OEMs may include a coupling device 104 with packages of consumable products. For example, an OEM may bundle a coupling device 104 with consumable product 402, such as, for example, a package of ink cartridges, to create a product bundle 404. In order to induce the

use of the older printing device, the OEM may include the coupling device 104 for free in the product bundle 404 with the consumable product 402. Alternatively, the OEM may increase the cost of the consumable product 402 slightly to help offset the cost of the coupling device 104. Also, the OEM could sell the coupling device 104 outright to users of older printing devices 102, or even simply give the coupling device 104 to users of older printing devices 102 for free. Based upon the low cost of the components within the coupling device 104, any of these scenarios may lead to the coupling devices 104 being provided to users of older printing devices 106 easily and efficiently.

[0026] Thus, an owner of a printing device 106 purchases a product bundle 408 that includes a consumable product 402 and the coupling device 104. The user couples the coupling device 104 to a computing device 102 and to a printing device 106. As previously described herein, the various new features and functionality that the coupling device 104 provides to the user for the printing device 106 makes it easier for the user to use the printing device 106 in a variety of new ways, thereby increasing the consumption of consumable products 402.

[0027] Fig. 5 is a flow diagram illustrating an example method 500 of increasing use of consumable products by users of peripheral devices. At 502, an apparatus is provided. The apparatus is configured to be coupled to (i) a peripheral device and (ii) a host device. The apparatus includes memory configured to store logic, wherein the logic is configured to (i) allow the host device and the peripheral device to communicate with each other and (ii) operate the peripheral device. The apparatus further includes a processor configured to execute the logic. At 504, the apparatus is bundled with a consumable product for sale with the consumable

product, wherein the consumable product is configured to be consumed by the peripheral device.

[0028] In accordance with various embodiments, an article of manufacture may be provided that includes a storage medium having instructions stored thereon that, if executed, result in the operations described herein with respect to certain aspects of the method 500 (and/or various other operations discussed herein). In an embodiment, the storage medium comprises some type of non-transitory memory, such as memory 204. In accordance with various embodiments, the article of manufacture may be a computer-readable medium such as, for example, software or firmware.

[0029] The description incorporates use of the phrases "in an embodiment," or "in various embodiments," which may each refer to one or more of the same or different embodiments. Furthermore, the terms "comprising," "including," "having," and the like, as used with respect to embodiments of the present disclosure, are synonymous.

[0030] Various operations may have been described as multiple discrete actions or operations in turn, in a manner that is most helpful in understanding the claimed subject matter. However, the order of description should not be construed as to imply that these operations are necessarily order dependent. In particular, these operations may not be performed in the order of presentation. Operations described may be performed in a different order than the described embodiment. Various additional operations may be performed and/or described operations may be omitted in additional embodiments.

[0031] Although specific embodiments have been illustrated and described herein, it is noted that a wide variety of alternate and/or equivalent implementations may be substituted

for the specific embodiment shown and described without departing from the scope of the present disclosure. The present disclosure covers all methods, apparatus, and articles of manufacture fairly falling within the scope of the appended claims either literally or under the doctrine of equivalents. This application is intended to cover any adaptations or variations of the embodiment disclosed herein. Therefore, it is manifested and intended that the present disclosure be limited only by the claims and the equivalents thereof.

Claims

What is claimed is:

1. A method comprising:

providing an apparatus, wherein

the apparatus is configured to be coupled to (i) a peripheral device and (ii) a host device,

the apparatus includes memory configured to store logic, wherein the logic is configured to (i) allow the host device and the peripheral device to communicate with each other and (ii) operate the peripheral device, and

the apparatus further includes a processor configured to execute the logic; and

bundling the apparatus with a consumable product for sale with the consumable product, wherein the consumable product is configured to be consumed by the peripheral device.

2. The method of claim 1, wherein the apparatus is configured to be coupled, via a wireless communication conduit, to one or more of (i) the peripheral device and (ii) the host device.

3. The method of claim 1, wherein the apparatus is configured to be coupled, via a wired communication conduit, to one or more of (i) the peripheral device and (ii) the host device.

4. The method of claim 1, wherein the peripheral device is a printing device, and the host device is a computing device.

5. The method of claim 4, wherein the computing device comprises a desktop computer, a tower computer, a laptop computer, a notebook computer, a tablet computer, a personal digital assistant, or a mobile phone.

6. The method of claim 5, wherein the logic is further configured to allow multiple host devices to communicate with the printing device.

7. The method of claim 4, wherein the logic is further configured to enable automatic printing of content by the printing device, wherein the content is automatically retrieved via a network.

8. The method of claim 4, wherein the logic is further configured to enable automatic updating of the logic in the memory, wherein the logic is automatically updated via content retrieved via a network.

9. The method of claim 4, wherein the logic is further configured to enable automatic installation of one or both of (i) new logic and (ii) additional logic into the memory.

10. The method of claim 4, wherein the consumable product comprises ink, toner, or paper.

11. A combination of items comprising:

an apparatus, wherein

the apparatus is configured to be coupled to (i) a peripheral device and (ii) a host device,

the apparatus includes memory configured to store logic, wherein the logic is configured to (i) allow the host device and the peripheral device to communicate with each other and (ii) operate the peripheral device, and

the apparatus further includes a processor configured to execute the logic; and

a consumable product, wherein the consumable product is configured to be consumed by the peripheral device.

12. The combination of items of claim 11, wherein the apparatus is configured to be coupled, via a wireless communication conduit, to at least one of (i) the peripheral device and (ii) the host device.

13. The combination of items of claim 11, wherein the apparatus is configured to be coupled, via a wired communication conduit, to at least one of (i) the peripheral device and (ii) the host device.

14. The combination of items of claim 11, wherein the peripheral device is a printing device, and the host device is a computing device.

15. The combination of items of claim 14, wherein the computing device comprises a desktop computer, a tower computer, a laptop computer, a notebook computer, a tablet computer, a personal digital assistant, or a mobile phone.

16. The combination of items of claim 15, wherein the logic is further configured to allow multiple host devices to communicate with the printing device.

17. The combination of items of claim 14, wherein the logic is further configured to enable automatic printing of content by the printing device, wherein the content is automatically retrieved via a network.

18. The combination of items of claim 14, wherein the logic is further configured to enable automatic updating of the logic in the memory, wherein the logic is automatically updated via content retrieved via a network.

19. The combination of items of claim 14, wherein the logic is further configured to enable automatic installation of one or both of (i) new logic and (ii) additional logic into the memory.

20. The combination of items of claim 14, wherein the consumable product ink, toner, or paper.

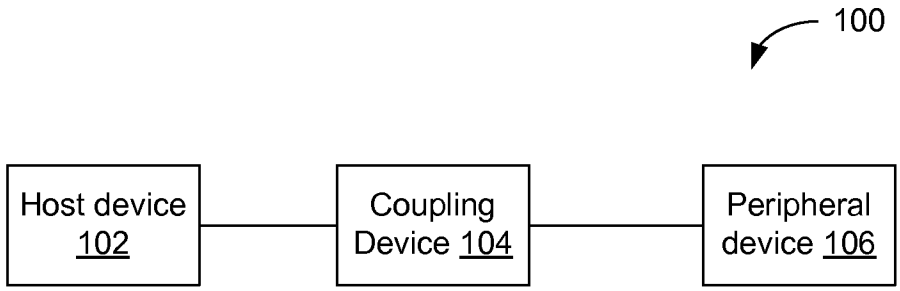
100
Host device 102
Coupling Device 104
Peripheral device 106

Fig. 1

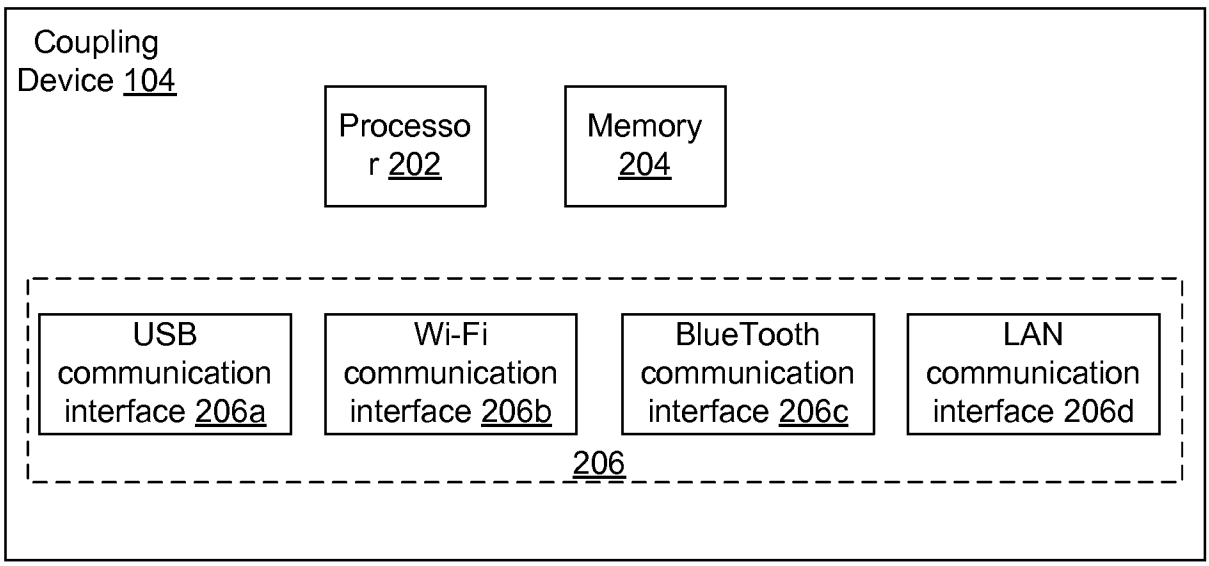
Coupling Device 104
Processor 202
Memory 204
USB communication interface 206a
Wi-Fi communication interface 206b
BlueTooth communication interface 206c
LAN communication interface 206d
206

Fig. 2

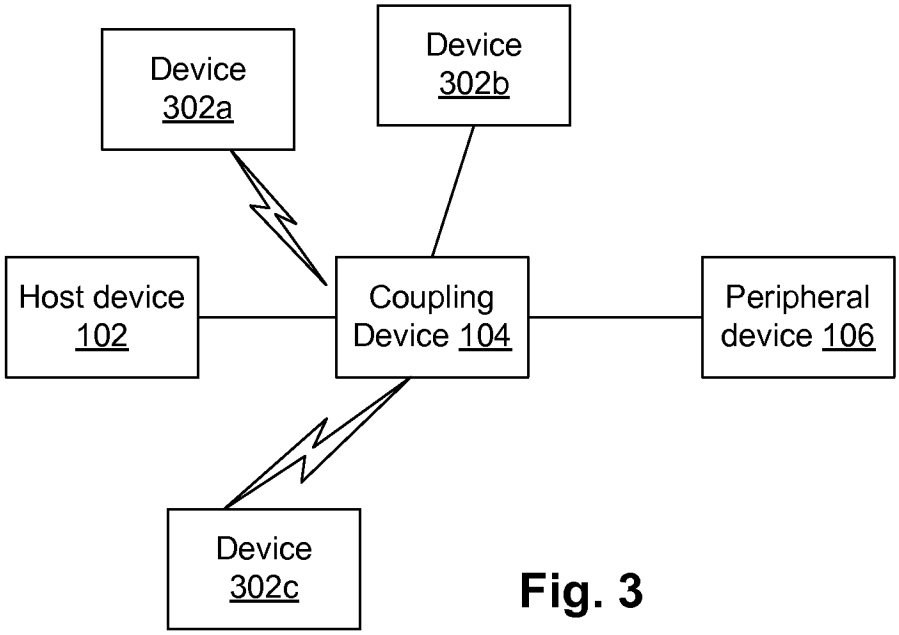
Device
302a
Device
302b
Host device
102
Coupling
Device 104
Peripheral
device 106
Device
302c

Fig. 3

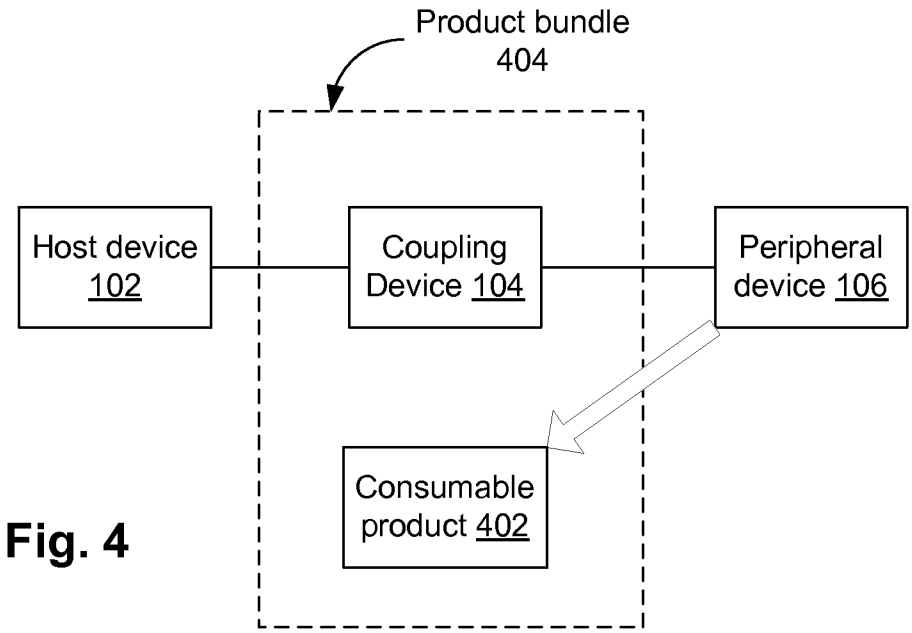
Product bundle
404
Host device
102
Coupling
Device 104
Peripheral
device 106
Consumable
product 402

Fig. 4

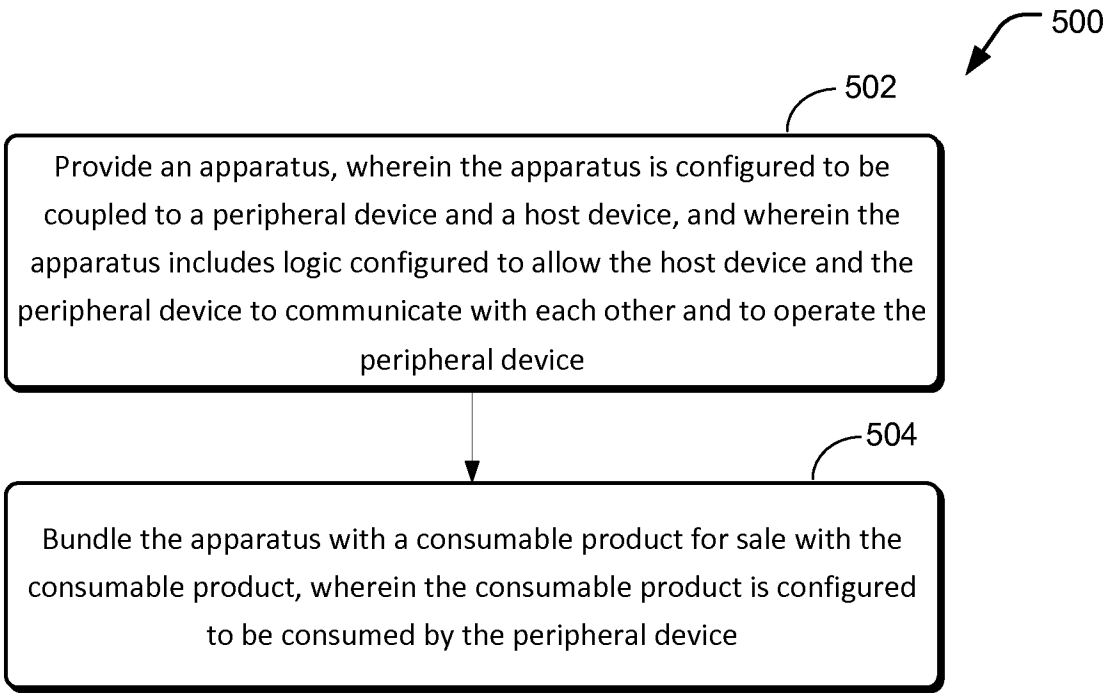
500
502
Provide an apparatus, wherein the apparatus is configured to be coupled to a peripheral device and a host device, and wherein the apparatus includes logic configured to allow the host device and the peripheral device to communicate with each other and to operate the peripheral device
504
Bundle the apparatus with a consumable product for sale with the consumable product, wherein the consumable product is configured to be consumed by the peripheral device

Fig. 5

INTERNATIONAL SEARCH REPORT

International application No
PCT/US2013/049440

A. CLASSIFICATION OF SUBJECT MATTER
INV. G06F3/12
ADD.

According to International Patent Classification (IPC) or to both national classification and IPC

B. FIELDS SEARCHED

Minimum documentation searched (classification system followed by classification symbols)
G06F

Documentation searched other than minimum documentation to the extent that such documents are included in the fields searched

Electronic data base consulted during the international search (name of data base and, where practicable, search terms used)
EPO-Internal

C. DOCUMENTS CONSIDERED TO BE RELEVANT

Category*	Citation of document, with indication, where appropriate, of the relevant passages	Relevant to claim No.
X	WO 2009/137762 A1 (PHAROS SYSTEMS INTERATIONAL IN [US]; REDDY PAUL JAMES [NZ]; SHARPE JUL) 12 November 2009 (2009-11-12) the whole document	1-20
X	US 2007/229884 A1 (TANAKA YOJI [JP]) 4 October 2007 (2007-10-04) the whole document	1-20

☐ Further documents are listed in the continuation of Box C.

☒ See patent family annex.

* Special categories of cited documents :

"A" document defining the general state of the art which is not considered to be of particular relevance

"E" earlier application or patent but published on or after the international filing date

"L" document which may throw doubts on priority claim(s) or which is cited to establish the publication date of another citation or other special reason (as specified)

"O" document referring to an oral disclosure, use, exhibition or other means

"P" document published prior to the international filing date but later than the priority date claimed

"T" later document published after the international filing date or priority date and not in conflict with the application but cited to understand the principle or theory underlying the invention

"X" document of particular relevance; the claimed invention cannot be considered novel or cannot be considered to involve an inventive step when the document is taken alone

"Y" document of particular relevance; the claimed invention cannot be considered to involve an inventive step when the document is combined with one or more other such documents, such combination being obvious to a person skilled in the art

"&" document member of the same patent family

Date of the actual completion of the international search	Date of mailing of the international search report
26 August 2013	05/09/2013

Name and mailing address of the ISA/	Authorized officer
European Patent Office, P.B. 5818 Patentlaan 2 NL - 2280 HV Rijswijk Tel. (+31-70) 340-2040, Fax: (+31-70) 340-3016	Kochev, Miroslav

1

INTERNATIONAL SEARCH REPORT

Information on patent family members

International application No
PCT/US2013/049440

Patent document cited in search report	Publication date	Patent family member(s)	Publication date
WO 2009137762 A1	12-11-2009	US 2010027054 A1	04-02-2010
		US 2010039662 A1	18-02-2010
		WO 2009137762 A1	12-11-2009
US 2007229884 A1	04-10-2007	JP 4548372 B2	22-09-2010
		JP 2007257377 A	04-10-2007
		US 2007229884 A1	04-10-2007