Oct. 23, 1951 V. H. GOODMAN 2,572,720

ORNAMENTAL VALANCE UNIT

Filed Aug. 15, 1949 2 SHEETS—SHEET 1

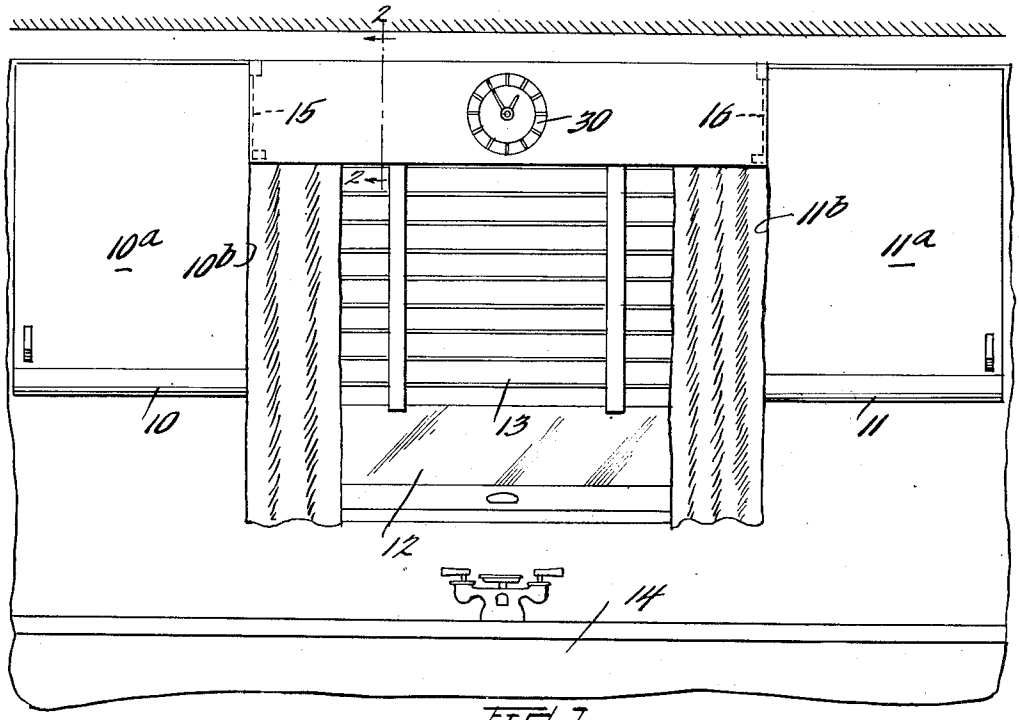

FIG. 1.

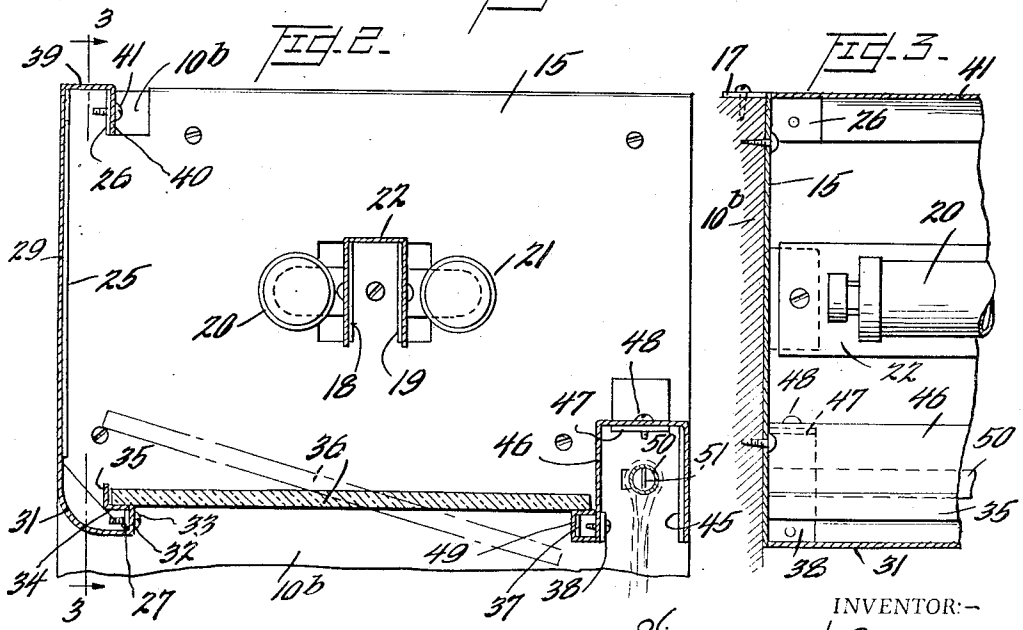

FIG. 2.

FIG. 3.

INVENTOR:—
Virginius H. Goodman,
by
Smith, Michael & Gardner,
Attorneys.

Oct. 23, 1951 V. H. GOODMAN 2,572,720

ORNAMENTAL VALANCE UNIT

Filed Aug. 15, 1949 2 SHEETS—SHEET 2

FIG. 4.

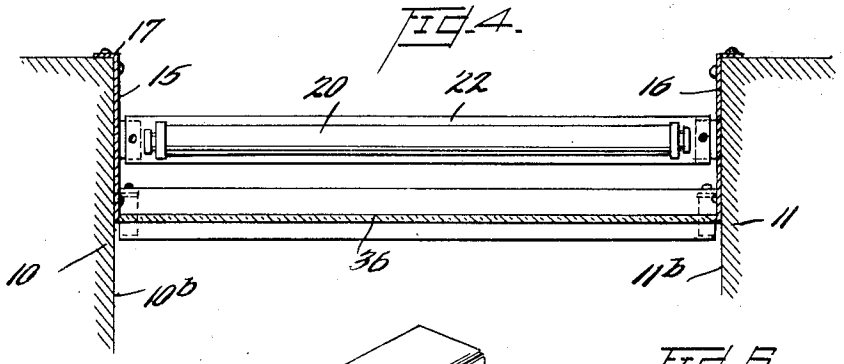

FIG. 5.

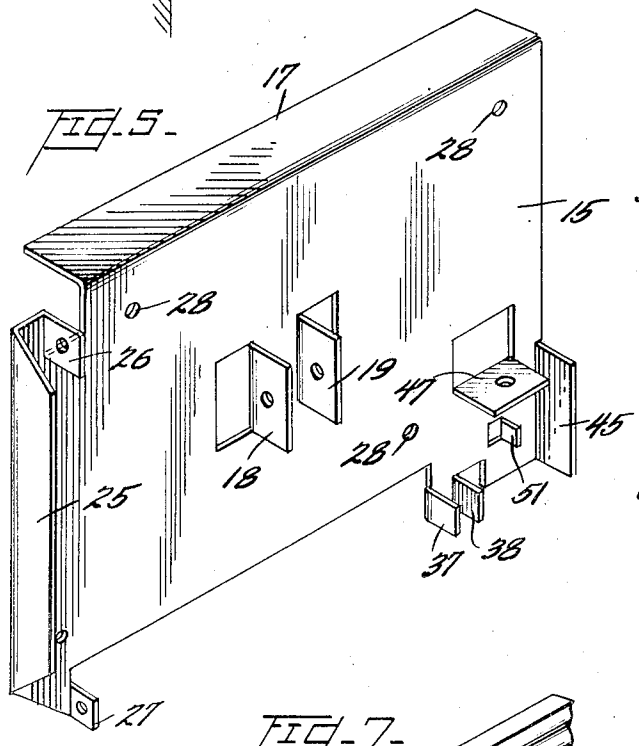

FIG. 6.

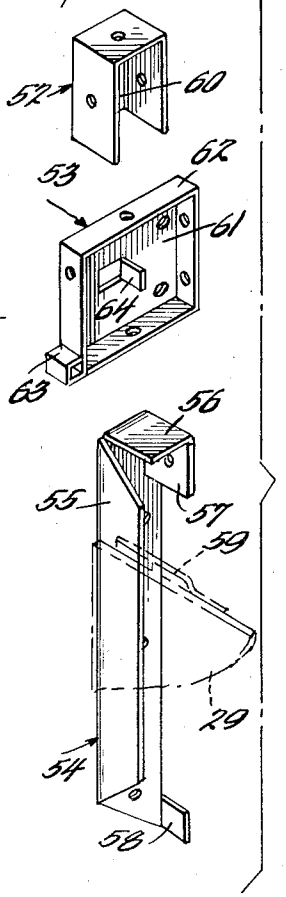

FIG. 7.

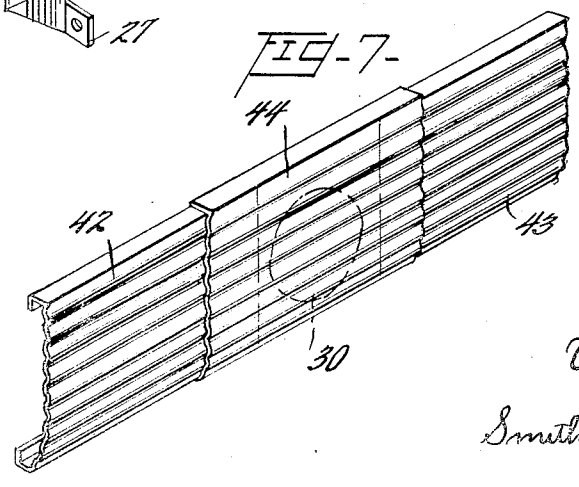

INVENTOR:—
Virginius H. Goodman,
BY
Smith, Michael & Gardiner,
Attorneys.

Patented Oct. 23, 1951 2,572,720

UNITED STATES PATENT OFFICE

2,572,720

ORNAMENTAL VALANCE UNIT

Virginius H. Goodman, Richmond, Va.

Application August 15, 1949, Serial No. 110,390

20 Claims. (Cl. 160—38)

1

This invention relates to an ornamental valance unit, and has particular reference to an ornamental valance unit for use in kitchens, pantries, or other work areas.

It is an object of the present invention to provide an ornamental valance unit of improved design adapted to be installed between the upper, opposed portions of two spaced wall cabinets, or the like and which is so constructed that it may be installed between such cabinets even though there is a considerable variation in the spacing of such cabinets along the wall.

It is a further object of the present invention to provide an ornamental valance unit having means thereon for supporting within the unit, an illuminating device such as a fluorescent tube or tubes, which tube or tubes are supported entirely by the unit and are positioned behind the front face thereof to cast their light downwardly and, if desired, also upwardly, to illuminate the sink, drainboard, table, or other work area adjacent the unit.

It is a further object of my present invention to provide an ornamental valance unit, preferably one having illuminating means therein, and including means for supporting a window curtain or drapery of either the roller or sliding type.

A still further object of my present invention is to provide an ornamental valance unit that is relatively cheap and easy to manufacture, is strong and durable, which serves to support illuminating means and curtains or draperies, which permits ready access to such illuminating means for the purpose of replacement and repair, which may if desired, support on the outer face thereof a clock, fan, radio speaker, or the like, which may be sold and installed as a unit, which is easy to install between the opposed side faces of spaced cabinets, which may be readily removed, and which is highly efficient in the purposes for which designed.

The above-mentioned objects, and further objects of the present invention, will be apparent from the following description of preferred embodiments of the invention as shown in the accompanying drawings, in which drawings:

Fig. 1 is an elevation showing the ornamental valance unit of the present invention installed between the upper portions of two spaced wall cabinets, the unit being positioned in front of a window and above a sink and its associated drainboard,

Fig. 2 is an enlarged vertical sectional view on the line 2—2 of Fig. 1, showing in dotted lines the manner of installing and removing the light-

2

diffusing glass which underlies the fluorescent lighting tubes,

Fig. 3 is a fragmentary sectional view on the lines 3—3 of Fig. 2,

Fig. 4 is a vertical, longitudinal, sectional view of the unit showing the manner in which the two end pieces or brackets are secured to the upper portions of the side walls of two longitudinally-spaced wall cabinets,

Fig. 5 is an enlarged perspective view of one of the end pieces or brackets of the unit,

Fig. 6 is an exploded view, in perspective, showing a modified form of the present invention wherein three separate bracket members perform the functions of a single end piece or bracket of the form of the invention shown in the preceding figures, and showing in dotted lines the manner of connecting the front plate of the unit with one of these single bracket members, and,

Fig. 7 is a perspective view of a modified form of front plate for the unit.

In the accompanying drawings, wherein like reference numerals have been employed to designate like parts throughout the several views, there are shown in Fig. 1 two wall-mounted kitchen cabinets 10 and 11 of any well known or preferred construction, one of which is mounted on the wall at each side of a window 12 shaded by a Venetian blind 13, and above a sink 14 having the usual drainboards extending from the sides thereof. The cabinets 10 and 11 have hinged doors 10^a and 11^a, respectively, equipped with the usual handles or pulls as shown, and have opposed, substantially parallel side walls 10^b and 11^b, respectively, between which the ornamental valance unit of the present invention is mounted. The cabinets 10 and 11 may, of course, be of several different types, i. e. they may be mounted in longitudinally-spaced relation along a wall and be supported from the wall, they may be relatively high cabinets supported from the floor, they may have sliding instead of swinging doors, they need not be mounted above a sink or at opposite sides of a window, etc.

Referring particularly to Fig. 5 of the accompanying drawings, it will be noted that this figure illustrates one of the two end pieces constituting a part of the valance unit and which serve to support the unit between the opposed walls 10^b and 11^b of longitudinally-spaced cabinets 10 and 11, respectively. One of said end pieces consists of a sheet metal plate 15 having means thereon, and preferably formed integrally therewith, for supporting the illuminating tubes,

the curtains, or draperies, and other parts to be hereinafter described, this plate 15 being located at the left end of the unit, and a similar plate 16 being located at the right end of the unit as viewed in Figs. 1 and 4, it being understood that plates 15 and 16 are mirror images of each other and are identical except for the location of certain parts. With this understanding, a detailed description of the left end piece 15 will, it is believed, suffice for both of said end pieces 15 and 16.

End piece 15 has a top marginal flange 17 extending at right angles to the body of the said piece and adapted to fit over, and in some cases to be secured to, the top of the cabinet 10. At approximately the center of the end piece 15 are two parallel, inwardly projecting and vertically disposed tabs 18 and 19 which are struck out from the metal plate to provide supports for the fluorescent lighting unit, which, as shown, may be of the dual or double type consisting of two fluorescent tubes 20 and 21 removably mounted on a support 22 which may carry the starter (not shown) for the tubes. Support 22 may have the shape of an open-ended, elongated channel member of inverted U-shaped transverse cross section, and is adapted to fit snugly over the inwardly-projecting tabs 18 and 19. At the front edge of piece 15, a flange 25 is bent at right angles to the plane of the plate and in a direction opposite to that in which flange 17 is bent. A pair of ears or tabs 26 and 27 are bent inwardly from plate 15 and extend parallel to each other and to flange 25. Several holes 28 are provided through plate 15 to facilitate its attachment by screws or the like to the end wall 10^b, as will be readily apparent from Fig. 4.

The front of the unit comprises a sheet or plate 29, which provides a smooth panel extending in a vertical plane between the two spaced cabinets with the upper edge of sheet or plate 29 in the same plane as the tops of the cabinets 10 and 11 as shown in Fig. 1, or, in installations where the tops of the cabinets reach the ceiling, with the said upper edge of sheet or plate 29 spaced slightly below the plane of the tops of the said cabinets so that light from the fluorescent tubes 20 and 21 may project over the top edge of sheet or plate 29 to be reflected from the ceiling and into the room in which the unit is installed. If desired, an electric clock 30, or a radio speaker, fan, or other device may be installed in a central opening provided in the sheet or plate 29.

The lower edge of sheet or plate 29 is bent inwardly on a gradual curve to provide a smooth, rounded corner 31 (see Fig. 2), and a vertical flange 32 is formed at the inner edge of corner 31, and is provided with an aperture to receive a bolt 33 by which the front sheet or plate 29 is attached to ear or tab 27. Flange 32 is further bent to provide a horizontal ledge 34 and a vertical marginal flange 35, the horizontal ledge 34 providing a support for the front edge of a horizontally arranged ground glass or transparent or translucent panel 36 which transmits and/or diffuses the light from the fluorescent tubes 20 and 21 upon the sink or working area therebeneath. Flange 35 prevents lateral shifting of the panel 36 when it rests on ledge 34. Support for the rear edge of panel 36 is provided by a pair of spaced, inturned ears or tabs 37 and 38 (see Fig. 5) integral with plate 15. It will be readily apparent that panel 36 is removable by merely pushing or lifting it off its supports and then turning it, as indicated in dotted lines in Fig. 2, and once this panel is removed, the fluorescent tubes 20 and 21 and their associated starter and other parts are readily accessible from beneath for purposes of replacement or repair.

Along the top edge of the front sheet or plate 29, there is provided a horizontal flange 39 which terminates in a vertical depending flange 40, the latter being apertured to receive a bolt 41 which secures the upper edge of the front sheet or plate 29 to the ear or tab 26. The front sheet or plate 29 is of sufficient inherent resiliency to be sprung over the ears or tabs 26 and 27 at each end of the unit prior to being secured to the end pieces 15 and 16 by bolts 33 and 41.

Instead of employing the one-piece sheet or plate 29 as the front of the unit and which sheet or plate is cut off at its end or ends to snugly fit the space between the two cabinets, I may employ a readily adjustable front of the construction shown in Fig. 7, wherein two corrugated or longitudinally-ribbed sheet metal members 42 and 43 are slidably joined by a central corrugated or longitudinally-ribbed bridging member 44. The three members which constitute this modified form of front are provided with inturned flanges, at their upper and lower edges, the lower inturned edges serving to support the panel 36 as above disclosed in connection with the other form of front, and for attachment of the front, by screws 41 and 33, to the ears or tabs on the end pieces or brackets 15 and 16, as will be understood without illustration. In other words, the front constructed as illustrated in Fig. 7 performs the same functions, and is supported in the same manner, as the front 29, the only important difference being that the front illustrated in Fig. 7 consists of parts which are longitudinally adjustable so as to be usable in instances where there is a variation in the distance between the opposed walls of the longitudinally-spaced cabinets. The dotted line circle in Fig. 7 shows the preferred location for the clock face, or other device which may be associated with, or mounted on, the front of central section 44.

In the majority of installations, an ornamental valance unit such as that presented herein, is mounted above a window as illustrated in Fig. 1, and to accommodate a window curtain or shade for the window, the end pieces 15 and 16 are provided with special supports. These supports may take the form of an inturned ear or tab 45 which extends at right angles to the plane of end piece 15 and at the rear, vertical edge thereof, as best shown in Fig. 5. The ear or tab 45 forms a vertical abutment for a curtain, shade, or drapery pocket member 46, which may consist of an elongated channel member of inverted U-shape transverse cross-section. A horizontal abutment for the pocket member 46 is provided by a horizontal, inturned ear or tab 47 struck out from end piece 15 and at right angles to the general plane thereof. A bolt 48 is passed through the member 46 and through an aperture in ear or tab 47 to connect the pocket member 46 to the end piece 15. A ledge or bead 49, square in transverse cross section is provided along the lower front edge of the pocket member 46 and fits over the ears or tabs 37 and 38 to serve as a support for the rear edge of the light transmitting and diffusing panel 36, or, if preferred, panel 36 may rest directly upon ears or tabs 37 and 38. As clearly shown in Fig. 2, the pocket member 46 provides a recess in the base of the unit, the walls of which recess effectively conceal the curtain or drapery rod 50, which rod is hollow and may

be of the slidable, telescopic type so that its ends will readily slip over inturned ears or tabs 51 which are struck out from the end pieces 15 and 16 to support the rod 50. The flat top of pocket member 46 may be effectively utilized to support the ballast (not shown) usually employed in connection with fluorescent lighting units.

In the modified form of the present invention shown in Fig. 6, I employ in lieu of end pieces 15 and 16, three separate parts designated generally by the reference numerals 52, 53, and 54, which parts are adapted to be secured by screws or bolts to the outer opposed faces of the longitudinally spaced cabinets 10 and 11 to serve as supports for the other members which make up the ornamental valance of the present invention, such as the front, the fluorescent lighting units, the curtain or drapery pocket, etc. Part 54 is one of two similar parts which secure the front sheet or plate 29 or the modified front plate shown in Fig. 7, in proper position relative to the cabinets. This part consists of a flat strip provided with an inturned flange 55 which functions in the same manner, and for the same purpose, as flange 25 previously described. A top flange 56, also at right angles to the plane of the flat strip, serves to support the front sheet or plate 29 by its longitudinal top flange 39. Ears or tabs 57 and 58 correspond in function to ears 26 and 27, respectively. If preferred, the front sheet or plate 29, or the modified form of front shown in Fig. 7 may be provided at its opposite ends with vertically disposed strips 59, the outer edges of which are positioned in spaced, parallel relation with respect to the rear surface of the front 29 of the unit, the inner edges of said strips 59 being welded or otherwise permanently secured to the rear surface of said front, thus forming an open ended pocket at each end of the front into which pocket the vertical flange 55 may fit.

Part 52 comprises a four-sided member adapted to be secured by a screw or screws (not shown) passed through its wall 60 and into the cabinet wall 10b or 11b. The channel shaped support 22 for fluorescent tubes 20 and 21 will have its ends supported by the part 52, in the same manner in which the support 22 is supported by ears or tabs 18 and 19 previously referred to.

Part 53 comprises a substantially square base plate 61 with a marginal flange 62, one lower corner of which is provided with a square ledge or bead 63 on which the inner edge of the panel 36 rests, it being understood that the forward edge of said panel is supported on the ears or tabs 58 of member 54. An inwardly-projecting, struck-out ear or tab 64 is located centrally of the base plate 61 and provides a support for one end of the curtain rod or shade and functions in the same manner as ear or tab 51.

It will be understood that the valance unit above described should be equipped with the necessary electrical connections and leads, including a three wire lead adapted to be plugged into a wall outlet or otherwise connected to a source of electric power, the lead consisting of one neutral wire, one "hot" wire to provide continuous current for an electric clock, fan, or the like, and one wire connected to a wall switch (not shown) to provide for selective use of the fluorescent lighting unit.

When the tubes 20 and 21 are energized by actuation of the controlling switch therefor, the light rays will pass upwardly to the ceiling since the unit is completely open at the top, and such light rays will also pass downwardly through panel 36 by which the light will be diffused before it reaches the sink, drainboard, or other area beneath the unit. If desired, the light rays may also pass through the front of the unit, as the latter could well be made of any one of a number of transparent materials, such as glass, synthetic resin, or the like. It will be obvious that the ornamental valance unit of the present invention may be painted or otherwise finished on its exterior to match the color of the cabinets or to contrast pleasingly therewith. All unsightly mechanical parts of the mechanism contained within the unit are concealed, and the unit will add considerably to the appearance, as well as to the comfort and convenience, of the room in which it is installed.

It is to be understood that the forms of the invention shown and described herein are to be taken as preferred examples of the same, and that various changes may be made in the shape, size and arrangement of parts without departing from the spirit of the invention or from the scope of the subjoined claims.

Having thus described my invention, I claim:

1. An ornamental valance unit for installation between the upper, opposed side surfaces of two longitudinally spaced wall cabinets, comprising end pieces adapted to be secured to said side surfaces, said end pieces including means thereon for supporting an illuminating device and the front panel of the unit, an illuminating device extending between said end pieces and supported thereon, and a front panel extending between said end pieces and supported thereon.

2. An ornamental valance unit for installation between the upper, opposed side surfaces of two longitudinally-spaced wall cabinets, comprising end pieces adapted to be secured to said side surfaces, said end pieces including means thereon for supporting an illuminating device, the front panel of the unit, and a light-diffusing panel; an illuminating device extending between said end pieces and supported thereon; a front panel extending between said end pieces and supported thereon; and a light-diffusing panel extending between said end pieces and supported thereon, the illuminating device being behind the front panel and above the light diffusing panel.

3. An ornamental valance unit for installation between the upper, opposed side surfaces of two longitudinally-spaced wall cabinets, comprising end pieces adapted to be secured to said side surfaces, said end pieces including means thereon for supporting an illuminating device, the front panel of the unit, a light-diffusing panel and a curtain or drapery pocket; and a curtain or drapery pocket, said illuminating device, front panel, light-diffusing panel, and curtain or drapery pocket extending between said end pieces and supported thereon, the illuminating device being behind the front panel and above the light-diffusing panel.

4. An ornamental valance unit for installation between the upper, opposed side surfaces of two longitudinally-spaced wall cabinets, comprising end pieces adapted to be secured to said side surfaces, said end pieces including means thereon for supporting an illuminating device, the front panel of the unit, a light-diffusing panel, a curtain or drapery pocket, and a curtain or drapery rod; an illuminating device; a front panel; a light-diffusing panel; a curtain or drapery pocket; and a curtain or drapery rod, said illuminating device, panels, pocket, and rod extending between said end pieces and supported thereon, the illu-

minating device being behind the front panel and above the light-diffusing panel, and said rod being disposed within said pocket.

5. An ornamental valance unit for installation between the upper, opposed side surfaces of two longitudinally-spaced wall cabinets, comprising end pieces adapted to be secured to said side surfaces, said end pieces including means thereon for supporting the front panel of the unit and a curtain or drapery pocket, a front panel extending between said end pieces and supported thereon, and a curtain or drapery pocket extending between said end pieces and supported thereon, said pocket being behind said panel.

6. An ornamental valance unit for installation between the upper, opposed side surfaces of two longitudinally-spaced wall cabinets, comprising end pieces adapted to be secured to said side surfaces, said end pieces having means thereon for supporting the front panel of the unit, a curtain or drapery pocket and a curtain or drapery rod; a front panel; a curtain or drapery pocket; and a curtain or drapery rod, said panel, pocket, and rod extending between said end pieces and supported thereon, and said pocket and rod being behind said panel, and said rod being in said pocket.

7. An ornamental valance unit for installation between the upper, opposed side surfaces of two longitudinally-spaced wall cabinets, comprising end pieces adapted to be secured to said side surfaces, said end pieces including means thereon for supporting an illuminating device, the front panel of the unit and a curtain or drapery rod; an illuminating device; a front panel; and a curtain or drapery rod, said illuminating device, panel, and rod extending between said end pieces and supported thereon, and said illuminating device and said rod being behind said front panel.

8. An ornamental valance unit for installation between the upper, opposed side surfaces of two longitudinally-spaced wall cabinets, comprising end pieces adapted to be secured to said side surfaces, each end piece comprising a plate having an inturned flange at the front edge thereof and an inturned tab near the central portion thereof; a front panel for the unit extending between the end pieces and engaging the inturned flanges and supported thereby; and an illuminating device extending between the end pieces and engaging the inturned tabs and supported thereby.

9. An ornamental valance unit for installation between the upper, opposed side surfaces of two longitudinally-spaced wall cabinets, comprising end pieces adapted to be secured to said side surfaces, each end piece having an inturned flange at the front edge thereof, a pair of inturned tabs parallel to and spaced behind said inturned flange, and a second pair of inturned tabs near the central portion of the end piece; a front panel for the unit extending between said end pieces, the ends of said panel engaging the outer surface of said inturned flanges and secured to and supported by said first pairs of inturned tabs; and an illuminating device extending between the end pieces, the ends of said device secured to and supported by said second pairs of tabs.

10. An ornamental valance unit as defined in claim 9, wherein each end piece is also provided with a third set of inturned tabs, and wherein a curtain or drapery pocket extends between the end pieces and is supported by said third set of tabs.

11. An ornamental valance unit as defined in claim 9, wherein each end piece is also provided with an inturned tab, and wherein a curtain or drapery rod extends between the end pieces and is supported by said last mentioned tabs.

12. An ornamental valance unit as defined in claim 9, wherein each end piece is also provided with a third set of inturned tabs, and also with an inturned tab located within said third set of tabs; wherein a curtain or drapery pocket extends between the end pieces and is supported by said third set of tabs; and wherein a curtain or drapery rod extends between the end pieces and is supported within said pocket by said tabs located within said third set of tabs.

13. An ornamental valance unit for installation between the upper, opposed side surfaces of two longitudinally-spaced wall cabinets, comprising substantially rectangular end pieces adapted to be secured to said side surfaces, each end piece having a first inturned tab at the upper portion of the front edge thereof, a second inturned tab at the central portion thereof, a third inturned tab at the lower portion of the front edge thereof, and a fourth inturned tab at the lower portion of the rear edge thereof and in horizontal alinement with said second inturned tab; a front panel for the unit extending between said end pieces with the ends of said panel secured to said first tabs; an illuminating device extending between said end pieces and supported by said second tabs; and a light-diffusing panel extending between said end pieces and having its front and rear edges supported by the third and fourth tabs.

14. An ornamental valance unit as defined in claim 13 wherein the front piece is also secured to said third tabs.

15. An ornamental valance unit as defined in claim 13 wherein each end piece is also provided with a fifth inturned tab, and wherein a curtain or drapery rod extends between said end pieces and is supported at its opposite ends by said fifth tabs.

16. An end piece for ornamental valance units comprising a generally flat body adapted to lie flat against a vertical wall, an outwardly-extending top flange integral with said body to aid in supporting the same, an inturned front end flange integral with said body and extending at right angles to the plane thereof and adapted to support one end of a front panel for the ornamental valance unit and means integral with the body and located approximately centrally thereof adapted to support one end of illuminating means within the ornamental valance unit and behind the front panel thereof.

17. A end piece for ornamental valance units comprising a generally flat body adapted to lie flat against a vertical wall and to be secured thereto, an inturned front end flange integral with said body and extending at right angles to the plane thereof and adapted to support one end of a front panel for the ornamental valance unit, means integral with the body and located approximately centrally thereof adapted to support one end of illuminating means within the ornamental valance unit and behind the front panel thereof, and a pair of spaced, inturned tabs on said body adjacent the lower edge thereof adapted to support one end of a light-diffusing panel within the unit and below the illuminating means therein.

18. An end piece for ornamental valance units comprising a generally strip-like body adapted to be secured in vertical position to a vertical wall, an inturned flange integral with said body

and extending at right angles to the plane thereof and adapted to engage one end of a front panel for the unit, an inturned flange at the top of said body and extending at right angles to the plane thereof and adapted to engage beneath one end of a top flange of a front panel for the unit, and an inturned flange at the bottom of said body and extending at right angles to the plane thereof and adapted to support thereon a front corner of a light-diffusing panel for the unit.

19. An end piece for ornamental valance units comprising a generally rectangular plate-like member adapted to be secured to a vertical wall, said member having an inwardly-extending marginal flange along the top and front edges thereof, said top portion of said marginal flange adapted to support thereon one end of a curtain or drapery pocket which is substantially inverted U-shaped in transverse cross section with the central connecting end portion of said pocket resting on said top portion of said marginal flange; a tab projecting inwardly from the central portion of said plate-like member adapted to support thereon one end of a curtain or drapery rod; and means projecting forwardly from the front portion of said marginal flange of said plate-like member adapted to support thereon a rear corner of a light-diffusing panel for the unit.

20. An end piece for ornamental valance units comprising a substantially rectangular base member adapted to be secured to a vertical wall,

said member having an inwardly-extending marginal flange along at least the top and front and rear edges thereof, the top portion of said flange adapted to support thereon one end of a support for an illuminating device for the unit, which end of said support is substantially inverted U-shaped in transverse cross section and is adapted to have its central connecting portion resting on the top portion of said marginal flange of the base member to be supported thereby with the depending side portions of said end positioned adjacent the front and rear portions of said marginal flange.

VIRGINIUS H. GOODMAN.

REFERENCES CITED

The following references are of record in the file of this patent:

UNITED STATES PATENTS

Number	Name	Date
1,591,838	Kaibas	July 6, 1926
1,768,187	Bushey	June 24, 1930
2,034,395	Hough	Mar. 17, 1936
2,138,502	Nordstrom	Nov. 29, 1938
2,200,510	Lorentzen	May 14, 1940
2,395,073	Schepmoes	Feb. 19, 1946

OTHER REFERENCES

Magazine of Light #4, 1941, page 44, published by General Electric Co., June 5, 1941.