June 7, 1938. A. A. JOHNSON 2,119,711

ELECTRIC LIGHT FIXTURE

Filed Nov. 2, 1935

Fig. 3.

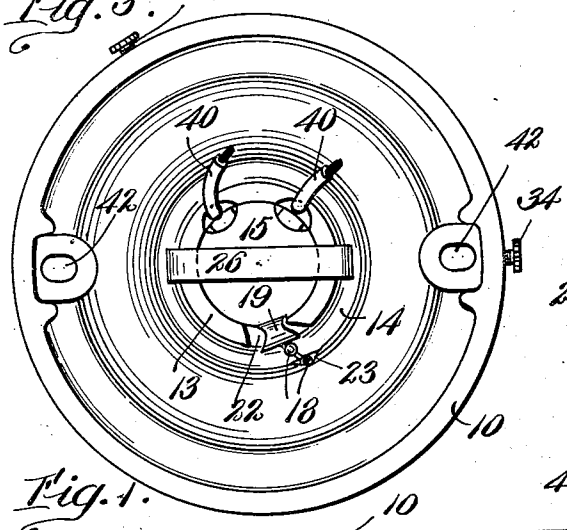

Fig. 4.

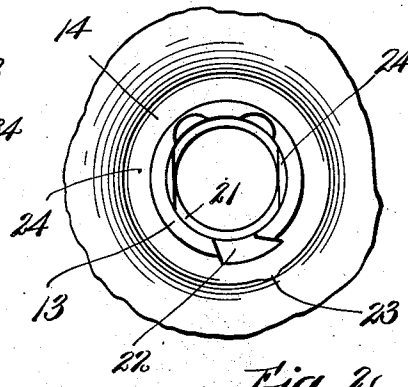

Fig. 1.

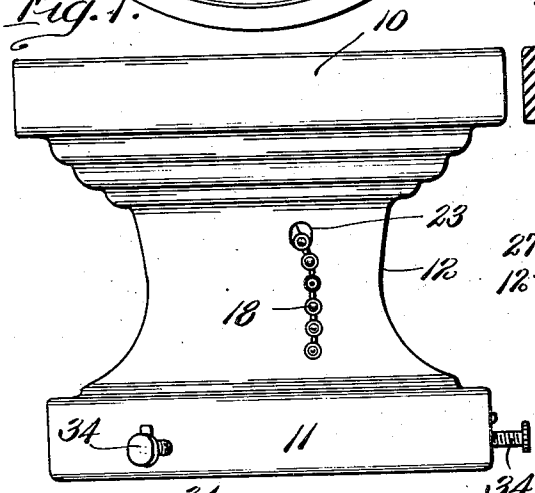

Fig. 2.

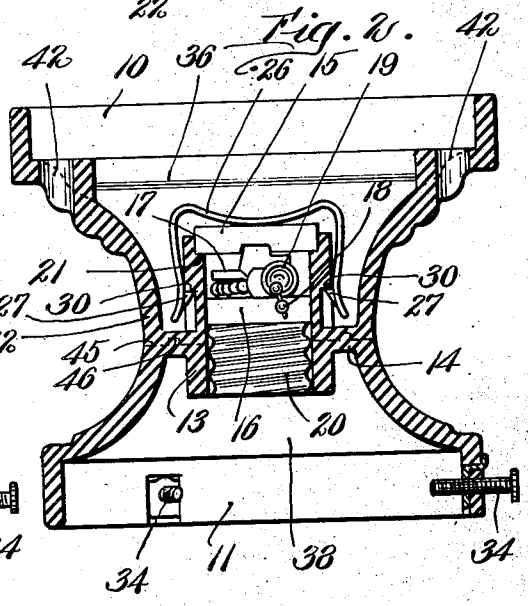

Fig. 5.

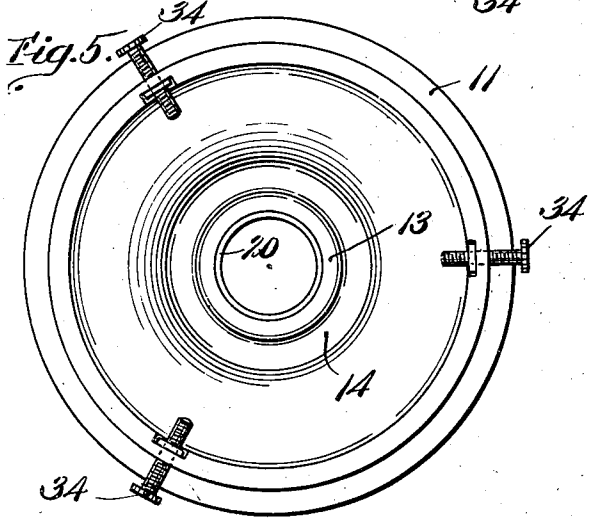

Fig. 6.

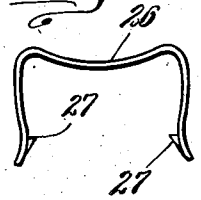

Fig. 7.

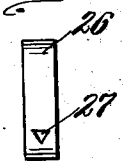

Inventor.

Arthur A. Johnson

by Francis J. V Darcy

Abby.

Patented June 7, 1938

2,119,711

UNITED STATES PATENT OFFICE

2,119,711

ELECTRIC LIGHT FIXTURE

Arthur A. Johnson, New Bedford, Mass., assignor to John I. Paulding, Inc., New Bedford, Mass., a corporation of Massachusetts

Application November 2, 1935, Serial No. 47,995

6 Claims. (Cl. 240—78)

This invention relates to electric light fixtures and is exemplified in a cealing canopy or bracket.

The principal object of the invention is the production of a fixture of the character described which is of simple and light construction and which may be assembled with ease and facility.

Another object of the invention is the provision of a fixture having an interior tubular member adapted to house and insulate an electric lamp socket.

Another object of the invention is the provision of simple and easily applied means for locking the socket within the tubular member after it has been inserted in the rear end thereof.

A further object is the provision in such a fixture of an insulating body which may be molded from a semi-dry mixture by the use of suitable dies in order to secure a rapid and low cost production.

An additional object of the invention is to provide a fixture having simple and efficient shade holding means.

Other objects of the invention will be more specifically described hereinafter.

My invention contemplates an electric light fixture comprising a relatively thin shell of porcelain or other insulating material having an interior integral tubular member adapted for housing and insulating an electric lamp socket of any suitable standard construction, together with simple means for locking the lamp socket within the tubular member. The lamp socket is inserted in the inner end of the tubular member against an interior shoulder formed therein which limits the forward movement of the socket. It may then be locked within the member by any suitable means such as a clamp adapted to straddle the inner ends of said member and the socket, and having its ends locked over exterior shoulders on the tubular member.

This produces a fixture of extreme simplicity which can be easily and rapidly assembled and in which the lamp socket is efficiently and completely insulated. All danger of short circuiting is eliminated and since the socket is positively locked in the tubular member, there is no possibility of the socket becoming loosened during use.

The shell, of which the interior tubular member constitutes an integral part, may be of various forms and of different designs and may be adapted for use either on ceilings or walls or other supporting surfaces, since, in its broad aspect, my invention resides in providing an insulating shell of any suitable form having an integral interior tubular member for holding and insulating a lamp socket.

In the accompanying drawing showing one form of fixture constructed in accordance with my invention, Fig. 1 is a side elevation of the fixture;

Fig. 2 is a central vertical sectional view of the same, showing the lamp socket and the means for locking it within the tubular member in elevation;

Fig. 3 is a top plan view of the fixture, looking downwardly in Fig. 1;

Fig. 4 is a similar view of the central portion of the fixture, showing the rear end of the tubular member with the lamp socket removed;

Fig. 5 is a bottom plan view of the fixture, looking upwardly in Fig. 1;

Fig. 6 is a side elevation of one form of clamp for locking the lamp socket within the tubular member; and

Fig. 7 is an end elevation of the same.

In the drawing, there is shown a shell of a form adapted for use as a ceiling fixture, having its two ends 10 and 11 of circular flanged form with an intermediate waist portion 12 of restricted diameter. The flanged end 10 is adapted to engage the ceiling or other supporting surface and the flanged end 11 is designed to support a globe or shade. Within the shell is formed a tubular member 13 open at both ends which is intermediate its ends, supported and carried by a transverse web 14, all of these parts being of porcelain or other suitable insulating material and formed as an integral structure.

Within the tubular member 13 is mounted an electric lamp socket which may be of any suitable construction but the type shown in the drawing is of the general form described in United States Letters Patent No. 1,007,791, issued to Morey and Brogden, November 7, 1911. The socket comprises a pair of insulating buttons 15 and 16 fastened together in parallel spaced relation, a switch 17 mounted between said buttons and operated by a pull chain 18 led out through a chain guide 19 and a lamp receiving screw shell 20 of usual construction fastened to the bottom face of the lower button 16. For a more particular description of the construction and mode of operation of said socket, reference may be made to said Letters Patent.

The lamp socket is inserted from the inner end of the tubular member and for holding it against downward movement therein, the interior of the said member may be provided with a suitable shoulder 21 adapted to be engaged by a

portion of the lamp socket. Preferably, the shoulder 21 is of annular form facing inwardly and positioned adjacent the inner end of the said member in position to be engaged by the upper button 15 of the lamp socket, which is of a slightly larger diameter than the lower button for this purpose. The tubular member is preferably of a length approximately equal to the length of the socket so that its outer end conceals from view the metal screw shell.

To accommodate the bell-shaped chain guide 19, which projects from the side of the socket, the tubular member is provided with a longitudinal recess 22 opening out its inner end. From the chain guide, the pull chain leads out of an opening 23 in the side of the shell. Ordinarily, the chain guide lying in the recess or slot 22 will prevent rotary movement of the lamp socket within the tubular member, but, if desire, a further precaution against rotary movement may be used comprising one or more flattened portions on the button 15 adapted to engage corresponding flat-faced projections 24, shown in Figure 4 on the interior of the tubular member adjacent its inner end.

Any suitable means may be employed for locking the lamp socket within the tubular member with the insulating button 15 in close engagement with the interior shoulder and one such form is shown comprising a clamp in the form of a metal band 26 bent into U-shape and having each of its ends provided with an inwardly extending locking projection 27 (Fig. 6). The exterior of the tubular member is provided with a pair of oppositely arranged recessed shoulders 30 facing outwardly, formed in the molding process by longitudinal recesses in the opposite sides of said member. When the clamp is mounted across the inner ends of the lamp socket and tubular member and pushed downwardly, the projections 27 snap over the recessed shoulders 30. To facilitate this action, the head of the clamp is curved downwardly and the ends are curved inwardly to produce a spring action to hold the locking projections in operative position. The curvature of the head of the clamp allows for slight variations in the dimensions of the socket or tubular member, which are sometimes unavoidable especially when the parts are made of porcelain. Furthermore, the curved head of the clamp exerts a spring pressure on the inner end of the socket to hold it against the shoulder.

For holding a shade, the outer flange 11 of the shell may be provided with any suitable means and in the drawing it is shown as carrying a plurality of shade holders 34 of the character described in United States Letters Patent No. 1,803,574, issued to H. K. Wack, May 5, 1931, for Shade holder.

The partition 14 divides the interior of the shell into two chambers 36 and 38, the former serving as a space for holding the lead wires 40 attached to the lamp socket, and the latter constituting a space for receiving the lamp and shade. The shell is also provided at opposite points inside and adjacent its inner flanged end 10, with a pair of bores 42 for receiving bolts or screws for fastening the fixture to the cross bar or bridge on an outlet box set in the ceiling in the usual manner.

The shell with its integral tubular member may be made from any suitable insulating material and by any suitable method. Preferably, however, it is made from porcelain from a semi-dry mixture, molded the required form by the use of suitable dies. The advantage of this method is that the shells may be produced with greater rapidity and more cheaply than by the method of casting them from a wet mixture in molds. In making the shell by the use of dies, however, it is necessary, in order to withdraw the dies, to make it in two parts, the division line between the two parts being indicated in Figure 2 by the transverse broken line 45 in the web 14. After the two parts are molded, their engaging surfaces are smeared with any suitable porcelain mixture, commonly called "slip body" and the upper part is placed in proper position upon the lower part. To secure proper registration between the two parts, their engaging surfaces are provided with interlocking means such as an annular rib 46 on the lower part which engages a corresponding groove in the upper part. The shell is then sprayed with a glaze material and fired in the usual manner, which fuses the two parts into a unitary integral body.

In assembling the fixture, after the pull chain is passed through the opening 23 in the shell and its inner end connected to the switch, the lamp socket with the short lead wires attached is inserted in the inner end of the tubular member with the chain guide in the recess 22 and is locked therein by pushing the clamp into locking position, and the shade holding devices are mounted in the outer flange of the shell. This is a simple operation easily and rapidly performed.

It will be observed that the provision of a tubular member of the character described simplifies to a marked degree the construction of the fixture of my invention, facilitates the assembling of it and reduces the cost of production. In addition, since the tubular member entirely encloses all the contacts and switch parts of the socket, any contact between those parts and the lead wires is made impossible and, thereby, all danger of short circuiting is eliminated.

Although I have shown and described my invention as embodied in a fixture adapted for use ac a ceiling canopy or bracket, it is not to be limited thereto since, by varying the form and shape of the shell, my invention may be embodied in fixtures designed for use on walls or other supporting surfaces.

It is to be understood that my invention is not to be limited to the form herein shown and described, since it is capable of various other embodiments within the scope of the following claims.

What I claim is:

1. In a fixture of the character described, the combination with a one-piece insulating body comprising a shell, an interior tubular portion of approximately the same length as a lamp socket having an interior shoulder and a transverse web supporting said tubular portion and dividing the interior of said body into an inner chamber for lead wires and an outer chamber for an electric lamp, of a lamp socket mounted in said tubular portion and having a shoulder engaging said interior shoulder for preventing outward movement of said socket and a U-shaped clamp straddling the inner ends of said tubular portion and lamp socket for locking said lamp socket within said tubular portion.

2. In a fixture of the character described, the combination with a one-piece insulating body comprising a shell portion and an interior tubular portion for housing and insulating a lamp socket, said tubular portion being approximately

of equal length with said socket and being provided with an interior shoulder facing its inner end and with a pair of oppositely located exterior shoulders facing its outer end, of a lamp socket mounted in said tubular portion and having a shoulder in engagement with said interior shoulder for preventing outward movement of said socket and a clamp straddling the inner ends of said tubular portion and said socket for locking said socket within said tubular portion, said clamp having its ends formed for locking over said exterior shoulders.

3. In a fixture of the character described, the combination with a one-piece insulating body comprising a shell portion, an interior tubular portion for housing and insulating a lamp socket and an interior transverse web supporting said tubular portion, said tubular portion being approximately of equal length with said socket and being provided with an interior shoulder facing its inner end and with a pair of oppositely located exterior shoulders facing its outer end, of a lamp socket mounted in said tubular portion and having a shoulder in engagement with said interior shoulder for preventing outward movement of said socket and a clamp straddling the inner ends of said tubular portion and said socket for locking said socket within said tubular portion, said clamp having its ends formed for locking over said exterior shoulders.

4. In a fixture of the character described, the combination with a one-piece insulating body of porcelain comprising a shell portion and an interior tubular portion for housing and insulating a lamp socket, said tubular portion being approximately of equal length with said socket and being provided with an interior shoulder facing its inner end, with a pair of oppositely located exterior shoulders facing its outer end and an open slot in its inner end, of a pull-chain lamp socket mounted in said tubular portion and having a shoulder in engagement with said interior shoulder for preventing outward movement of said socket and with a laterally projecting chain guide engaging in said slot, and a clamp straddling the inner ends of said tubular portion and said socket for locking said socket within said tubular portion, said clamp having its ends formed for locking over said exterior shoulders and said shell being provided with an opening through which the pull chain of said socket leads outwardly.

5. In a fixture of the character described, the combination with a one-piece insulating body comprising a shell portion and an interior tubular portion having an interior shoulder, of a lamp socket mounted in said tubular portion, said lamp socket comprising only an insulating body having a shoulder engaging said interior shoulder, a switch mounted in said socket body and a lamp receiving screw shell fastened thereto, said tubular member being of approximately the same length as said lamp socket to enclose and insulate the parts of said socket, and means locked on the inner end of said tubular portion for exerting a continuous spring pressure on said socket to hold it seated therein.

6. In a fixture of the character described, the combination with a one-piece insulating body comprising a shell portion and an interior tubular portion having an interior shoulder and a pair of oppositely located exterior shoulders, of a lamp socket mounted in said tubular portion, said lamp socket comprising only an insulating body having a shoulder engaging said interior shoulder, a switch mounted in said socket body and a lamp receiving screw shell fastened thereto, said tubular member being of approximately the same length as said lamp socket to enclose and insulate the parts of said socket, and a clamp straddling the inner ends of said tubular portion and said socket and having its ends locked over said exterior shoulders to lock said socket within said tubular portion.

ARTHUR A. JOHNSON.