Aug. 5, 1941. L. O. WISMAN 2,251,477

METHOD OF MAKING HATS

Filed March 9, 1937

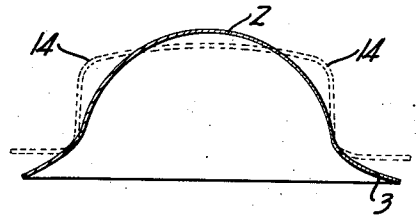

Fig. 1

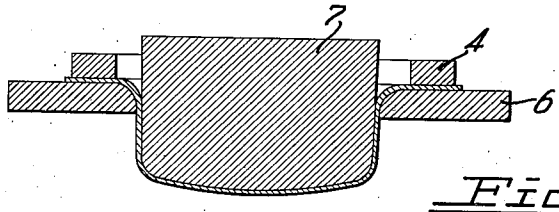

Fig. 2

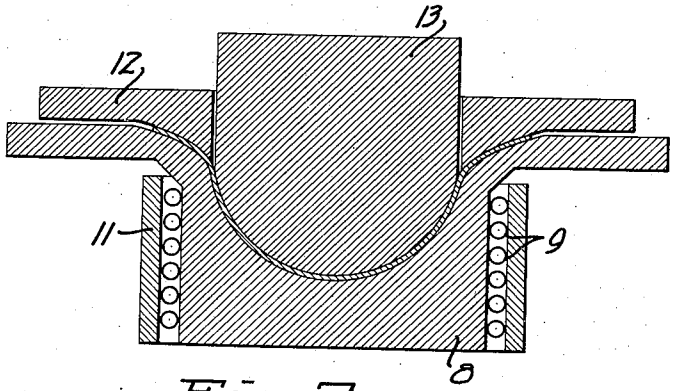

Fig. 3

INVENTOR
LAUREN OTHO WISMAN
BY Charles S. Evans
HIS ATTORNEY

Patented Aug. 5, 1941

2,251,477

UNITED STATES PATENT OFFICE

2,251,477

METHOD OF MAKING HATS

Lauren Otho Wisman, Walnut Creek, Calif., assignor to E. D. Bullard Company, San Francisco, Calif., a corporation of California

Application March 9, 1937, Serial No. 129,853

1 Claim. (Cl. 18—56)

My invention relates to safety hats; and the broad object of the invention is to provide an improved method of making a hat for protecting the head of a wearer against injury by falling objects and similar hazards.

Another object is to provide a method of forming a safety hat from a single blank of hard compacted sheet material, so that the resulting hat is both light in weight and strong mechanically.

The invention possesses other objects and features of advantage, some of which, with the foregoing, will be set forth in the following description of my invention. It is to be understood that I do not limit myself to this disclosure of species of my invention, as I may adopt variant embodiments thereof within the scope of the claim.

Referring to the drawing:

Figure 1 is a diagrammatic sectional view showing in full lines the final shape of a hat made by my method, and in superimposed dotted lines a partially shaped hat as formed in a preliminary step.

Figures 2 and 3 are diagrammatical sectional views illustrating steps in the method of forming the hat.

In terms of broad inclusion, the method of making the hat comprises first drawing the crown from a blank with a blunt nosed die to form a relatively flat top crown, and then pressing out the flat top of the partially formed crown with a relatively sharp nosed die to form a dome shaped crown. In the drawing operation the edges of the sheet are held flat to form the brim, and in the second operation this outstanding brim is pressed into final shape.

In greater detail, and referring to the drawing, the hat made by the method embodying my invention comprises a dome shaped crown **2** and an integrally formed brim **3**, pressed from a single blank of hard compacted sheet material. The sheet used is preferably a densely compacted fibrous material, such as vulcanized fibre; this material being of light weight while at the same time having great strength and rigidity. This type of sheet material has been used in the past for making safety hats, but the resistance which it offers to deformation has made the formation of a hat from one piece an exceedingly difficult problem; and most hats made of this material have been built up in sections, sewn or otherwise secured together. These sectional constructions are of course weakened mechanically, and are bulkier and heavier than a one-piece structure would be.

I have discovered a simple method of forming the hat from a single sheet of this compacted fibre. In my method the blank is first cut to size, and is then placed in boiling water for about five minutes to soften the fibres. If desired, the blank may be steamed instead of boiled. The blank is then dipped in oil to provide a lubricant for the subsequent drawing operation. As an alternate procedure, the hard blank may be placed in hot oil. This treatment both softens the fibres and supplies the lubricant.

As shown in Figure 2, the blank is then placed in a double acting press having a ring **4** which comes down first to hold the brim portion of the hat against a fixed die plate **6** while the central crown portion is being drawn. The press is adjusted so that the pressure of the ring is sufficient to hold the brim, while at the same time allowing the degree of slippage necessary when the crown portion is being drawn out. In the second action of the press a die **7** comes down to partially form the crown into the shape shown by dotted lines in Figure 1.

This deformation of the blank is a true drawing operation, and is accomplished with considerable pressure on the die. The shape of the die at this stage of the process is important, because if the die is as peaked as the final crown shape it would punch the sheet. Therefore, in this first step the die used is quite blunt, so that the crown drawn out is substantially straight walled with a flat top and rounded corners, as shown in Figure 2. This shape actually carries the corners of the crown beyond the contour of the final crown, but this excess material is pulled in again when the top of the crown is pushed out into its final dome shape. In other words, die **7** draws out a partially formed crown which has a height less than and a top width greater than that of the final crown. The sides of this die are almost vertical, being tapered toward the nose of the die just enough to relieve the frictional binding which would occur if the sides were exactly vertical. With this shape of die the material may be drawn out without rupturing the sheet, or thinning the material at the top of the crown.

The partially formed hat thus produced is then taken out of the first press and placed in another press, also double acting, for the purpose of giving the hat its final shape. Since the first press is not heated, the drawing operation chills the fibre, and it is preferred to reboil or resteam the partially formed hat before placing it in the second press. This resoftening is particularly

necessary if there is a material interval of time between operations, as where the first drawing is done at one place and the final forming at another.

As shown in Figure 3, the second press is provided with a female die **8** having the exact shape of the final hat. This die is mounted on the bed of the press, and is provided with suitable electrical heating elements **9** surrounded by a casing **11**. The partially formed hat is placed upside down in the heated die, and a ring die **12** is brought down to press the brim portions of the hat into final shape. This ring die is conical in shape, and functions to form the brim correctly and also to iron out any wrinkles that might be present from the drawing operation. Die **12** also serves to hold the brim while the crown is being pressed into final shape.

In the second action of the press, shown in Figure 3, a die **13** is brought down to press the crown into conformity with the female die. Die **13** it will be noted has a relatively sharp nose as compared to the die **7** in the first press, but this pointed nose is now permissible as it will not punch the sheet, because the action is now one of forming, not of drawing. Figure 1 shows a section through the final hat, with the shape of the partially formed hat indicated by dotted lines.

Here it is seen that the corners **14** of the partially formed crown have actually been drawn out to extend beyond the contour of the final hat shape. This excess material is just sufficient to make up for that needed in extending the top of the crown in the final pressing operation. In other words, as die **13** pushes out the top of the crown, corners **14** move in to allow for the crown extension. By this method all the material needed is drawn out by the blunt nosed die, and the final shaping by the sharp nosed die may be done without danger of punching the material.

Another important reason for drawing the crown out first with a blunt nosed die is that the thinning of the sheet which accompanies the drawing occurs largely along the sides of the die. This leaves the material across the nose of the die with substantially its original thickness, so that the dome of the crown in its final shape has substantially the full thickness of the original sheet. Since falling objects are most apt to strike the dome of the crown, the full sheet thickness is highly desirable at this point. If a sharp nosed die were first used, even if possible to do so without punching, it would cause greatest thinning at the dome, which of course is not desirable.

After the hat has been formed, the brim **3** is trimmed to desired shape; and the hat is painted, or otherwise treated, for waterproofing. Any suitable sweat band and suspension means may be provided for supporting the hat on the head of the wearer.

I claim:

The method of making a safety hat from a difficultly deformable material, which comprises drawing out sufficient material from the sheet with a blunt nosed die to form the final crown, and then reshaping the drawn portions into final crown shape with a sharp nosed die without additional drawing, so that a relatively pointed crown shape is obtained without rupturing the sheet.

LAUREN OTHO WISMAN.