May 4, 1937. J. NUNNIKHOVEN 2,079,300

PRINTING PRESS FOR PRINTING ON REELS AND SIMILAR ROTATORY BODIES

Filed June 29, 1936

Fig. 1.

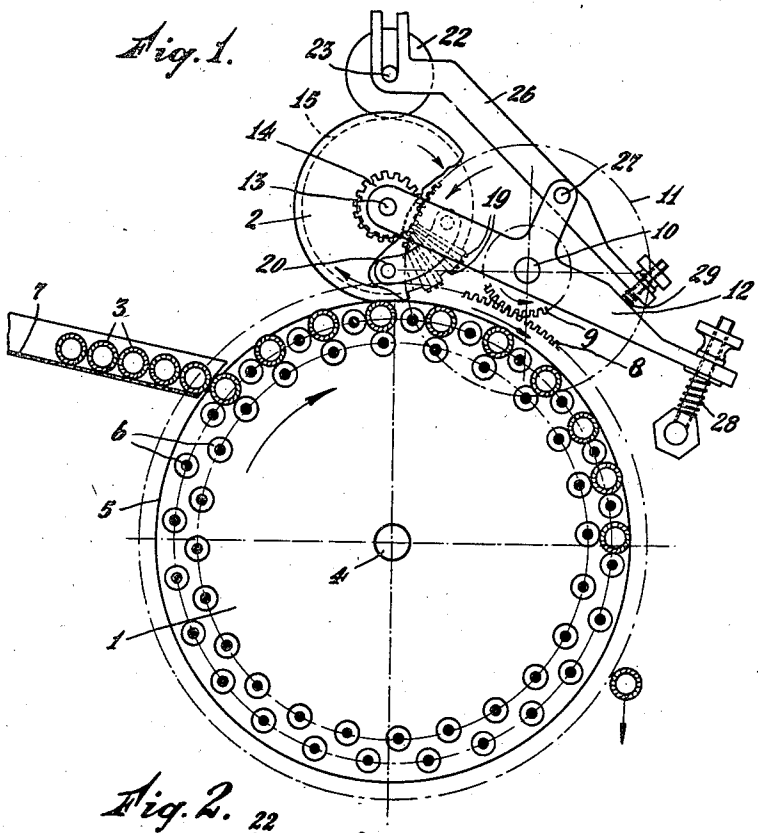

Fig. 2.

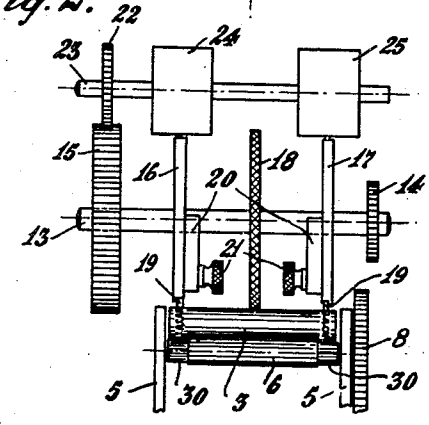

Inventor
J. Nunnikhoven
By C. F. Wenderoth
Atty.

Patented May 4, 1937

2,079,300

UNITED STATES PATENT OFFICE

2,079,300

PRINTING PRESS FOR PRINTING ON REELS AND SIMILAR ROTATORY BODIES

Johannes Nunnikhoven, Helmond, Netherlands, assignor to J. A. Carp's Garenfabrieken N. V., Helmond, Netherlands, a corporation of the Netherlands

Application June 29, 1936, Serial No. 88,051
In the Netherlands July 2, 1935

6 Claims. (Cl. 101—38)

In various branches of industry reels made of cardboard or a similar inexpensive material are used either as containers for various articles or for the purpose of having certain products wound on the same, such as for example the cardboard reels on which yarns are wound in the yarn factories and subsequently brought upon the market.

As a rule such reels are to contain various indications with regard to quality, color etc. of the product wound on the same, for which purpose a piece of paper on which the necessary indications have been previously printed, is pasted about the reels.

If—adhering to the example of a yarn factory—yarns of a great many different colors and qualities are made, this involves the necessity of always having ready a stock of reels provided with the desired indications for all these various yarns.

Now a large stock of reels will necessarily require a great deal of care and considerable expense for maintaining a dust-free storing place and for the administration of all this stock while moreover there is always the chance of the manufacture of a certain kind of yarn being discontinued, which will render worthless the supply of reels kept for this special line of goods.

The purpose of the present invention is to obviate the above mentioned drawbacks inherent to the use of ready made reels, by producing an inexpensive printing press by means of which the reels needed in each special case may be provided in a simple and rapid manner with the desired printed text.

The printing press according to the invention comprises a special member for supporting, rotatively on their longitudinal axis, the reels to be printed, which reels for this purpose are passed on under a printing device with the aid of the said member.

The reel carrier moreover may be provided with spaces for receiving the reels bounded by rotatory cylinders or rollers. The carrier may also be constructed in the shape of a cylinder the body of which consists of two concentric rows of rotatively supported cylinders or rollers, which rows are staggered with regard to each other. The carrier member for the reels may then cooperate with a member which is forcibly driven together with the said carrying member and on which there are rigidly secured one or more holders for the matrices or printing plates from which the printing is to be applied on the reels.

This last mentioned member may comprise a driven shaft on which the holders for clamping concentrically about the shaft the matrices or printing plates from which the printings are to be made, are rigidly attached. The shaft of the printing device may be controlled by an adjustable device for resiliently pressing the printing roller against the carrier member for the reels. Moreover a knurled roller may be mounted on the shaft of the printing device for the purpose of rotating about their longitudinal axis the reels contacting with the said roller.

The invention will now be further explained with the aid of the accompanying drawing illustrating a printing press according to the invention for applying a printed text to reels on which yarns are to be wound; in this drawing—

Fig. 1 is a vertical section through the printing press;

Fig. 2 is a front view of the printing and inking mechanisms.

The printing press chiefly comprises a carrier member 1 for passing on the reels 3 which are to receive the printed text, under the printing device 2. The carrier member 1 is composed of two disks 5 mounted on a shaft 4, between which disks there are rotatively arranged two concentric rows of cylinders 6, which rows are staggered with regard to each other. These cylinders are constituting the limits of spaces that are uniformly distributed over the circumference of the carrier member 1, which spaces when the carrier member 1 is rotated in the direction of the arrow are filled one by one with one of the reels 3 fed along the feeding trough 7.

On the shaft 4 of the carrier member 1 there is mounted a toothed wheel 8 meshing with a toothed gear 9 mounted on a shaft 10, on which there is also mounted a toothed gear 11 and by which a lever 12 is oscillatingly supported. In one end of the lever 12 there is rotatively supported the shaft 13, on which shaft, besides the toothed wheels 14 and 15, are mounted the disk-shaped holders 16 and 17 for the matrices or printing plates from which the printing is to be done, and also a knurled disk 18.

The holders 16 and 17 are each provided with a radial recess in which the matrices 19 are placed and closed up by means of clamping pieces 20 held against the sides of the holders by means of bolts 21. The toothed gear 14 meshes with the toothed gear 11, while the toothed gear 15 meshes with a toothed gear 22 mounted on a shaft 23 on which there are mounted moreover the ink rollers 24 and 25 cooperating with the holders 16 and 17. The shaft

23 is supported in the forked ends of two double levers 26 which are rotatively connected at 27 to the lever 12. The lever 12 is controlled by an adjustable spring device 28 provided for keeping the printing mechanism 2 in co-operation with the carrier member 1, while the double levers 26 are provided with an adjustable spring device 29 for keeping the ink rollers 24 and 25 in co-operation with the disk-shaped holders 16 and 17.

When the printing press is running, the reels 3 which are to be printed upon, are rolling towards the cylinder 1 along the feeding trough 7 and are received and carried upwardly one by one in one of the spaces which are driven past the end of the feed trough 7 and which are bounded by three small cylinders 6.

When arrived on the highest point of their path, the reels 3 will contact with the knurled disk 18 of the printing device, whereby they are rotated on their longitudinal axis, and will roll over the small cylinders 6 by which they are supported. During this rotation of the reels matrices 19 rotating with the same circumferential speed as the disk 18 are rolled over the ends of the reels and leave their imprints on the same. In order to prevent the printing on the reels 3 from being smudged by contact with the small cylinders 6, the said cylinders are locally provided with annular grooves 30.

When the cylinder 1 is further rotated, the printed reels will drop out unhampered.

On account of the fact that the reels are supported freely rotatively during printing, it is possible to impart to the printing disks 16 and 17 a great velocity of revolution in the same direction of rotation as that of the cylinder 1, so that a high rate of production can be obtained. Because of the resilient support provided for the printing mechanism and the inking system pertaining thereto, any possible differences in the diameter of the reels may be compensated for, so that one may be certain that all the reels are efficiently provided with sharp printing.

It is obvious that the principle of the present invention may be brought into practice in numerous other manners, differing from the embodiment described above. It is possible, for example, to replace the cylinder 1 by an endless belt composed of rotatable small cylinders 6, which belt is passed on below the printing device.

The printing mechanism may consist of a reciprocating slide in which the matrices or printing plates from which the printings are taken are secured, and which slide is then moved over the reels.

I claim:

1. In a printing press for directly printing on reels and similar rotatory bodies with the aid of printing matrices, the combination of a continuously rotatable cylindrical carrier member, provided with a circumferential row of spaces for receiving the reels, said spaces each being bounded by a number of rotatable rollers for supporting freely rotatively on their longitudinal axis the reels to be passed under a printing device with the aid of the said carrier member.

2. In a printing press for directly printing on reels and similar rotatory bodies with the aid of printing matrices, the combination of a continuously rotatable cylindrical carrier member, provided with a circumferential row of spaces for receiving the reels, said spaces each being bounded by a number of rotatable rollers for supporting freely rotatively on their longitudinal axis the reels to be passed under a printing device with the aid of the said carrier member, which member is adapted to cooperate with a positively and, together with the carrier member, driven printing device, provided with a number of holders with interchangeable printing matrices so as to roll the printing device over the reels.

3. In a printing press for directly printing on reels and similar rotatory bodies with the aid of printing matrices, the combination of a continuously rotatable cylindrical carrier member, provided with a circumferential row of spaces for receiving the reels, said spaces each being bounded by a number of rotatable rollers for supporting freely rotatively on their longitudinal axis the reels to be passed on under a printing device with the aid of the said carrier member, which member is adapted to cooperate with a positively and, together with the carrier member, driven printing device, provided with a number of holders with interchangeable printing matrices so as to roll the printing device over the reels, the printing device consisting of a rotatable disc-shaped member, fixedly mounted on a driving shaft on which shaft also a knurled disc is secured for rotating about their longitudinal axis the reels contacting with the said disc.

4. In a printing press according to claim 1, adjustable means for resiliently pressing the shaft of the printing device in the direction to the carrier member for the reels to be printed.

5. In a printing press according to claim 2, adjustable means for resiliently pressing the shaft of the printing device in the direction to the carrier member for the reels to be printed.

6. In a printing press according to claim 3, adjustable means for resiliently pressing the shaft of the printing device in the direction to the carrier member for the reels to be printed.

JOHANNES NUNNIKHOVEN.