(19) Europäisches Patentamt
European Patent Office
Office européen des brevets

(11) EP 3 771 679 A1

(12) **EUROPEAN PATENT APPLICATION**

(43) Date of publication:
03.02.2021 Bulletin 2021/05

(51) Int Cl.:
B65H 69/06 *(2006.01)*

(21) Application number: **20188117.4**

(22) Date of filing: **28.07.2020**

(84) Designated Contracting States:
AL AT BE BG CH CY CZ DE DK EE ES FI FR GB GR HR HU IE IS IT LI LT LU LV MC MK MT NL NO PL PT RO RS SE SI SK SM TR
Designated Extension States:
BA ME
Designated Validation States:
KH MA MD TN

(30) Priority: **30.07.2019 JP 2019140204**

(71) Applicant: **TMT Machinery, Inc.**
Osaka-shi, Osaka 541-0041 (JP)

(72) Inventor: **YAMAMOTO, Masato**
Kyoto-shi, kyoto 612-8686 (JP)

(74) Representative: **Grünecker Patent- und Rechtsanwälte**
PartG mbB
Leopoldstraße 4
80802 München (DE)

(54) **SYNTHETIC YARN SPLICER**

(57) A splicer (66) includes a yarn splicing portion (66a), a first clamping portion (123), a second clamping portion (133), and a moving mechanism (170). The moving mechanism (170) performs a first moving process of moving a first portion (K1) clamped by the second clamping portion (133) before releasing in a first yarn (YA) and a second yarn (YB) to one side in a penetrating direction by moving the first clamping portion (123) to one side in the penetrating direction while a clamping operation is performed by the first clamping portion (123) and a clamping operation of the second clamping portion (133) is released. The yarn splicing portion (66a) performs a first entangling process of entangling the first yarn (YA) and the second yarn (YB) before the first moving process and a second entangling process of entangling the first portion (K1) after the first moving process.

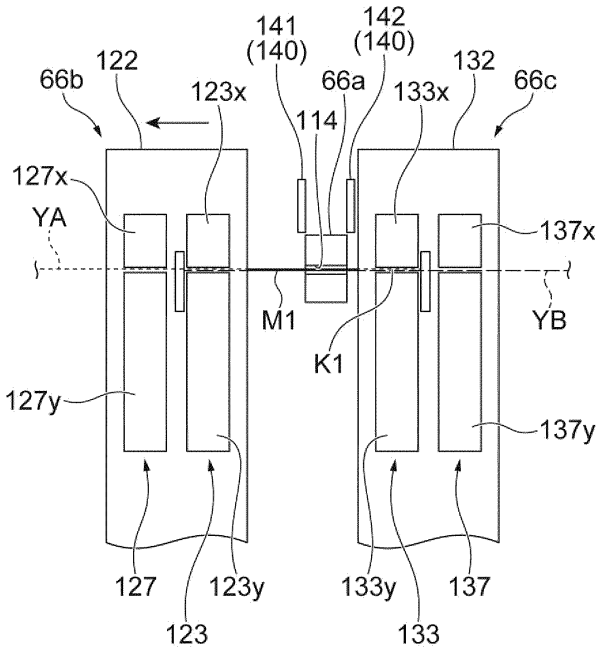

Fig.23A

EP 3 771 679 A1

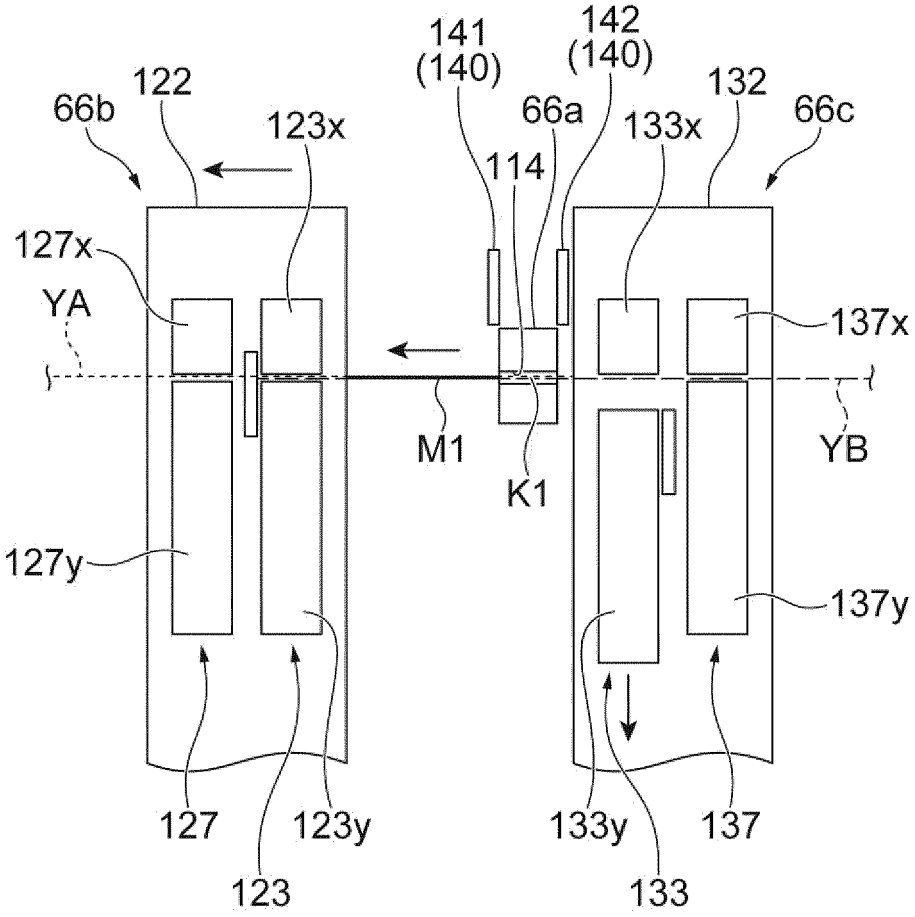
141
(140)
142
(140)
122
66b
123x
66a
133x
132
66c
114
127x
YA
137x
M1
K1
YB
127y
137y
127
123y
133y
137
123
133

Fig.23B

Description

TECHNICAL FIELD

[0001] An aspect of the invention relates to a synthetic yarn splicer.

BACKGROUND

[0002] As a technique for a synthetic yarn splicer that joins one yarn and the other yarn made of synthetic fibers, for example, a yarn binding device described in Japanese Unexamined Patent Publication No. H10-101267 is known. The device described in Japanese Unexamined Patent Publication No. H10-101267 includes a pair of clamps capable of clamping overlapping ends of yarns (one yarn and the other yarn) and an air nozzle entangling and binding the yarns by blowing out compressed air to the overlapping yarns between the clamps. A cutter for cutting a yarn end is provided between the air nozzle and each of both clamps.

SUMMARY

[0003] In the above-described synthetic yarn splicer, since an extra yarn end protruding from an entangled portion (bound portion) formed by entangling these yarns is shortened when one yarn and the other yarn are joined, there is still room for improvement.

[0004] An object of an aspect of the invention is to provide a synthetic yarn splicer capable of shortening a length of a yarn end protruding from an entangled portion of one yarn and the other yarn.

[0005] A synthetic yarn splicer according to an aspect of the invention is a synthetic yarn splicer for splicing one yarn and the other yarn made of synthetic fibers, including: a yarn splicing portion that has a passage forming a space into which the one yarn and the other yarn are insertable and entangles the one yarn and the other yarn inserted through the passage; a first clamping portion that is disposed on one side of the yarn splicing portion in a penetrating direction of the passage and clamps the one yarn and the other yarn; a second clamping portion that is disposed on the other side of the yarn splicing portion in the penetrating direction and clamps the one yarn and the other yarn; and a moving mechanism that moves each of the first clamping portion and the second clamping portion along the penetrating direction, in which the moving mechanism performs a first moving process of moving the first clamping portion to one side in the penetrating direction and moving a first portion clamped by the second clamping portion before releasing in the one yarn and the other yarn to one side in the penetrating direction while the one yarn and the other yarn are clamped by the first clamping portion and the clamping of the second clamping portion is released, and in which the yarn splicing portion performs a first entangling process of entangling the one yarn and the other yarn before the first moving process and performs a second entangling process of entangling the first portion of the one yarn and the other yarn after the first moving process.

[0006] In this synthetic yarn splicer, one yarn and the other yarn can be entangled by the first entangling process. In addition, the first portion clamped by the second clamping portion in one yarn and the other yarn can be pulled and moved by the first clamping portion and can be entangled by the second entangling process. Accordingly, it is possible to shorten the length of the yarn end protruding from the entangled portion of one yarn and the other yarn.

[0007] In the synthetic yarn splicer according to an aspect of the invention, the moving mechanism may perform a stretching process of stretching the one yarn and the other yarn by moving at least one of the first clamping portion and the second clamping portion along the penetrating direction so that a gap between the first clamping portion and the second clamping portion increases while the one yarn and the other yarn are respectively clamped by the first clamping portion and the second clamping portion before the first entangling process and in the first entangling process, stretched portions stretched by the stretching process in the one yarn and the other yarn may be entangled. Accordingly, it is possible to prevent the entangled portion from being thicker than the other portion.

[0008] In the synthetic yarn splicer according to an aspect of the invention, the moving mechanism may perform a second moving process of moving the second clamping portion to the other side in the penetrating direction and moving a second portion clamped by the first clamping portion before releasing in the one yarn and the other yarn to the other side in the penetrating direction while the one yarn and the other yarn are clamped by the second clamping portion and the clamping of the first clamping portion is released after the second entangling process and the yarn splicing portion may perform a third entangling process of entangling the second portion of the one yarn and the other yarn after the second moving process. In this case, the second portion clamped by the first clamping portion in one yarn and the other yarn can be pulled and moved by the second clamping portion and can be entangled by the third entangling process. Accordingly, it is possible to shorten the length of the yarn end protruding from the entangled portion of one yarn and the other yarn.

[0009] The synthetic yarn splicer according to an aspect of the invention may further include: a third clamping portion that is disposed on one side of the first clamping portion in the penetrating direction and clamps the one yarn; and a fourth clamping portion that is disposed on the other side of the second clamping portion in the penetrating direction and clamps the other yarn and a force of clamping the yarn by the third clamping portion and the fourth clamping portion may be smaller than a force of clamping the yarn by the first clamping portion and the second clamping portion. In this case, it is possible to

prevent the yarn from coming off from the passage of the yarn splicing portion by the clamping of the third clamping portion and the fourth clamping portion. Further, since the force of clamping the yarn by the third clamping portion and the fourth clamping portion is smaller than the force of clamping the yarn by the first clamping portion and the second clamping portion, it is easy to pull and move the yarn, for example, in the first moving process or the second moving process.

[0010] The synthetic yarn splicer according to an aspect of the invention may further include: a first cutter that cuts the other yarn at a position on one side of the first clamping portion in the penetrating direction; and a second cutter that cuts the one yarn at a position on the other side of the second clamping portion in the penetrating direction. Accordingly, it is possible to further shorten the length of the yarn end protruding from the entangled portion of one yarn and the other yarn.

[0011] In the synthetic yarn splicer according to an aspect of the invention, the first cutter may move to a position in which the other yarn is cuttable in synchronization with an operation in which the first clamping portion clamps the one yarn and the other yarn and the second cutter may move to a position in which the one yarn is cuttable in synchronization with an operation in which the second clamping portion clamps the one yarn and the other yarn. Accordingly, it is possible to efficiently operate the first cutter and the second cutter.

[0012] In the synthetic yarn splicer according to an aspect of the invention, each of the first clamping portion and the second clamping portion may be swingable around a shaft intersecting the penetrating direction and the moving mechanism may include a cylindrical cam provided with a first cam groove and a second cam groove, a first follower connected to the first clamping portion and moving in a following manner along the first cam groove, a second follower connected to the second clamping portion and moving in a following manner along the second cam groove, and a motor rotationally driving the cylindrical cam. In this case, the movement of the first clamping portion and the second clamping portion in the penetrating direction can be realized by swinging the first clamping portion and the second clamping portion using the moving mechanism which is a cam mechanism.

[0013] According to an aspect of the invention, it is possible to provide the synthetic yarn splicer capable of shortening the length of the yarn end protruding from the entangled portion of one yarn and the other yarn.

BRIEF DESCRIPTION OF THE DRAWINGS

[0014]

FIG. 1 is a diagram illustrating a configuration of a false-twisting system according to an embodiment.
FIG. 2 is a perspective view illustrating a package holding unit of a first transporting device.
FIG. 3 is a perspective view illustrating a yarn supply package to which an adapter is attached.
FIG. 4 is a perspective view illustrating a package holding unit of a second transporting device.
FIG. 5 is a perspective view illustrating a creel stand.
FIG. 6 is a perspective view illustrating a peg.
FIG. 7 is a perspective view illustrating a package exchanging device.
FIG. 8A is a perspective view illustrating a holding unit.
FIG. 8B is a perspective view illustrating the holding unit.
FIG. 9 is a diagram illustrating a configuration of an exchange unit.
FIG. 10 is a side view illustrating a collection device.
FIG. 11 is a side view illustrating a supply device.
FIG. 12 is a perspective view illustrating a yarn joining device.
FIG. 13 is a perspective view illustrating the yarn joining device.
FIG. 14 is a perspective view illustrating the yarn joining device.
FIG. 15 is a perspective view illustrating a splicer.
FIG. 16 is a cross-sectional view illustrating a yarn splicing portion.
FIG. 17 is another perspective view illustrating a splicer.
FIG. 18A is a perspective view illustrating a second cutter.
FIG. 18B is another perspective view illustrating a second cutter.
FIG. 19 is a schematic development view illustrating a first cam groove and a second cam groove of a cylindrical cam.
FIG. 20A is a schematic plan view illustrating an example of an operation of a splicer.
FIG. 20B is a diagram illustrating a continuation of FIG. 20A.
FIG. 21A is a diagram illustrating a continuation of FIG. 20B.
FIG. 21B is a diagram illustrating a continuation of FIG. 21A.
FIG. 22A is a diagram illustrating a continuation of FIG. 21B.
FIG. 22B is a diagram illustrating a continuation of FIG. 22A.
FIG. 23A is a diagram illustrating a continuation of FIG. 22B.
FIG. 23B is a diagram illustrating a continuation of FIG. 23A.
FIG. 24A is a diagram illustrating a continuation of FIG. 23B.
FIG. 24B is a diagram illustrating a continuation of FIG. 24A.
FIG. 25A is a diagram illustrating a continuation of FIG. 24B.
FIG. 25B is a diagram illustrating a continuation of FIG. 25A.

FIG. 26A is a diagram illustrating a continuation of FIG. 25B.

FIG. 26B is a diagram illustrating a continuation of FIG. 26A.

FIG. 27A is a diagram illustrating a continuation of FIG. 26B.

FIG. 27B is a diagram illustrating a continuation of FIG. 27A.

FIG. 28 is a diagram illustrating a continuation of FIG. 27B.

DETAILED DESCRIPTION

[0015] Hereinafter, preferred embodiments of the invention will be described in detail with reference to the accompanying drawings. In the description of the drawings, the same or corresponding components will be denoted by the same reference numerals and redundant description will be omitted.

[0016] As illustrated in FIG. 1, a false-twisting system 1 includes a false-twisting machine 2, a first transporting device 3, a second transporting device 4, a yarn supply unit 5, a package replenishing device 6, and a package exchanging device 7. The false-twisting system 1 includes a control device (not illustrated) which overally controls the false-twisting machine 2, the first transporting device 3, the second transporting device 4, the package replenishing device 6, and the package exchanging device 7. In the false-twisting system 1 according to this embodiment, each of the false-twisting machine 2, the first transporting device 3, the second transporting device 4, the yarn supply unit 5, the package replenishing device 6, and the package exchanging device 7 is provided as a plurality of units. In the following description, the "Z direction" illustrated in the drawing is the vertical direction (up and down direction), the "X direction" is the horizontal direction, and the "Y direction" is a horizontal direction perpendicular to the X direction and the Z direction.

[0017] The false-twisting system 1 manufactures a winding package P2 (see FIG. 4) by processing yarns Y (see FIG. 3) supplied from a plurality of yarn supply packages PI (see FIG. 2). The yarn Y is, for example, a synthetic yarn made of thermoplastic synthetic fibers such as polyester and polyamide. The yarn supply package PI is formed by winding a partially oriented yarn (POY) on a yarn supply bobbin B1 (see FIG. 2). The winding package P2 is formed by winding a draw textured yarn (DTY) on a winding bobbin B2 (see FIG. 4).

[0018] The false-twisting machine 2 forms the winding package P2 by processing the yarn Y. The false-twisting machine 2 includes a main base 2a and two winding tables 2b. The main base 2a is provided with a false-twisting device, a feeding roller, and the like. The winding table 2b is provided with a winding device, a doffing device, and the like. The main base 2a extends in the X direction. The winding table 2b extends in the X direction. The winding table 2b is disposed at a position facing the main base 2a in the Y direction (the width direction of the main base 2a). That is, two winding tables 2b are disposed at positions sandwiching the main base 2a.

[0019] The false-twisting machine 2 twists the yarns Y supplied from the plurality of yarn supply packages PI and winds the processed yarn on the winding bobbin B2 so as to form the winding package P2 (see FIG. 4). The false-twisting machine 2 supplies the formed winding package P2 to the second transporting device 4.

[0020] The first transporting device 3 transports the yarn supply package P1. The first transporting device 3 runs along, for example, a first rail R1 suspended from a ceiling. For example, the first rail R1 is disposed between one false-twisting machine 2 and the other false-twisting machine 2 and between the winding table 2b and the yarn supply unit 5. The first transporting device 3 transports the yarn supply package PI between a position where the yarn supply package PI is supplied and a predetermined package replenishing device 6. As illustrated in FIG. 2, the first transporting device 3 includes a first package holding unit 3a. The first package holding unit 3a is suspended from the first rail R1. The first package holding unit 3a holds the plurality of (for example, twelve) yarn supply packages P1. The first package holding unit 3a supports the yarn supply package PI by a support member (not illustrated) inserted into the yarn supply bobbin B1 of the yarn supply package P1.

[0021] As illustrated in FIG. 3, an adapter 10 is attached to the yarn supply package P1. The adapter 10 holds the yarn Y. The adapter 10 includes an attachment portion 11, a first holding unit 12, and a second holding unit 13. The attachment portion 11 is attached to the yarn supply bobbin B1 of the yarn supply package PI so as to be rotatable in a synchronization manner. The attachment portion 11 has a cylindrical shape. The attachment portion 11 is attached to the end portion of the yarn supply bobbin B1 protruding from the side surface of the yarn supply package P1.

[0022] The first holding unit 12 holds a first yarn end Y1 of the yarn Y on the outer layer side of the yarn supply package P1. The first holding unit 12 is provided in the attachment portion 11. The first holding unit 12 includes a first arm 12a, a first gripper 12b, and a first yarn guide 12c. The first arm 12a extends in the radial direction of the attachment portion 11 while the base end side is fixed to the side surface of the attachment portion 11. The first gripper 12b grips the first yarn end Y1. The first gripper 12b is provided at the front end side of the first arm 12a. The first yarn guide 12c is provided in the first arm 12a.

[0023] The second holding unit 13 holds a second yarn end Y2 of the yarn Y on the inner layer side (tail side) of the yarn supply package P1. The second holding unit 13 is provided in the attachment portion 11. The second holding unit 13 includes a second arm 13a, a second gripper 13b, and a second yarn guide 13c. The second arm 13a extends in the radial direction of the attachment portion 11 while the base end side is fixed to the side surface of the attachment portion 11. The second arm 13a is disposed so as to be located on the same line as

the first arm 12a. The second gripper 13b grips the second yarn end Y2. The second gripper 13b is provided at the front end side of the second arm 13a. The second yarn guide 13c is provided in the second arm 13a.

[0024] In the adapter 10, the first yarn end Y1 drawn from the outer layer side of the yarn supply package PI is gripped by the first gripper 12b through the first yarn guide 12c of the first holding unit 12 and the second yarn end Y2 drawn from the inner layer side of the yarn supply package PI is gripped by the second gripper 13b through the first yarn guide 12c of the first holding unit 12 and the second yarn guide 13c of the second holding unit 13. The adapter 10 is attached to the yarn supply package PI by, for example, an operator. A bobbin cap BC (see FIG. 2) may be attached to the yarn supply bobbin B1 at an end portion opposite to the end portion to which the adapter 10 is attached.

[0025] As illustrated in FIG. 4, the second transporting device 4 transports the winding package P2. The second transporting device 4 runs along the first rail R1. The second transporting device 4 transports the winding package P2 between a predetermined false-twisting machine 2 and a storage facility (not illustrated) of the winding package P2. The second transporting device 4 includes a second package holding unit 4a. The second package holding unit 4a is suspended from the first rail R1. A plurality of (for example, sixteen) winding packages P2 are respectively held through the second package holding unit 4a. Specifically, the winding package P2 is held by supporting both end portions of each winding bobbin B2 with a package receiver.

[0026] As illustrated in FIG. 1, the yarn supply unit 5 supplies the yarn Y to the false-twisting machine 2. The yarn supply unit 5 is disposed adjacent to the false-twisting machine 2. The yarn supply unit 5 is disposed at a position facing the winding table 2b of the false-twisting machine 2 in the Y direction. The yarn supply unit 5 extends in the X direction. The yarn supply unit 5 includes a plurality of creel stands 20. The creel stand 20 holds the yarn supply package P1. The plurality of creel stands 20 are arranged in the X direction. In the yarn supply unit 5 according to this embodiment, the pair of creel stands 20 is arranged back to back in the Y direction.

[0027] As illustrated in FIG. 5, the creel stand 20 includes a creel base 21, four first columns 22a, 22b, 22c, and 22d, a partition plate 23, and a plurality of pegs 24. The creel base 21 is a frame-shaped frame body. Four first columns 22a to 22d are provided upright in the creel base 21. Four first columns 22a to 22d extend in the Z direction. Four first columns 22a to 22d are respectively arranged at predetermined intervals in the X direction and at predetermined intervals in the Y direction. The partition plate 23 is provided in the first columns 22a to 22d. The partition plates 23 are arranged at predetermined intervals in the Z direction of the first columns 22a to 22d. The partition plate 23 prevents the yarn supply package PI from falling.

[0028] The peg 24 supports the yarn supply package P1. The peg 24 is provided in the first columns 22a and 22b. The plurality of (for example, eight) pegs 24 are arranged at predetermined intervals in the Z direction of the first columns 22a and 22b. The peg 24 is disposed between the pair of partition plates 23. The peg 24 provided in the first column 22a and the peg 24 provided in the first column 22b are arranged at the same height position. In the following description, the peg 24 provided in the first column 22a is referred to as a "first peg 24a" and the peg 24 provided in the first column 22b is referred to as a "second peg 24b".

[0029] The first peg 24a and the second peg 24b are used as pairs. In this configuration, the yarn Y of the yarn supply package PI supported by the first peg 24a and the yarn Y of the yarn supply package PI supported by the second peg 24b are connected to each other. Specifically, the first yarn end Y1 on the outer layer side or the second yarn end Y2 on the inner layer side of the yarn Y of the yarn supply package PI supported by the first peg 24a is connected to the second yarn end Y2 on the inner layer side or the first yarn end Y1 on the outer layer side of the yarn supply package PI supported by the second peg 24b. Accordingly, one yarn Y is supplied from the yarn supply package PI supported by a pair of the first peg 24a and the second peg 24b.

[0030] As illustrated in FIG. 6, the peg 24 includes a yarn supply package support portion 25 and a peg body 26. The yarn supply package support portion 25 supports the yarn supply package P1. The yarn supply package support portion 25 includes package support members 25a and 25b and a rotation mechanism 25c. The package support members 25a and 25b are bar-shaped members. The package support members 25a and 25b are rotatably supported by the peg body 26. The package support members 25a and 25b extend in one direction, are parallel to each other, and are arranged with a predetermined gap therebetween. The peg 24 supports the yarn supply package PI at two points by the package support members 25a and 25b.

[0031] A covering portion 25d is provided in one end portion of the package support member 25a in the extending direction. A covering portion 25e is provided in one end portion of the package support member 25b in the extending direction. The covering portions 25d and 25e are formed of, for example, rubber (resin) or the like having a large friction coefficient. The covering portions 25d and 25e contact (come into contact with) the inner peripheral surface of the yarn supply bobbin B1 of the winding package P2. One end of the package support member 25a and one end of the package support member 25b are connected to each other by a connection member 25f.

[0032] The rotation mechanism 25c includes a driven pulley 25g, a drive pulley 25h, a power transmission belt 25i, and a first wheel 25j.

[0033] The driven pulley 25g is provided in the other end of the package support member 25a. The drive pulley 25h is provided in the other end of the package support

member 25b. The power transmission belt 25i is stretched over the driven pulley 25g and the drive pulley 25h. The first wheel 25j is provided in the drive pulley 25h (the package support member 25b). In this embodiment, the first wheel 25j is a Geneva wheel that constitutes a Geneva mechanism. The first wheel 25j is rotated by the rotational driving of a first yarn joining driver 62a or a second yarn joining driver 63a of a yarn joining device 60 to be described later. In the yarn supply package support portion 25, the package support member 25a and the package support member 25b rotate in a synchronization manner by the rotation of the first wheel 25j.

[0034] The peg body 26 includes a peg body 26a and a rotation transmitting member 26b. The peg body 26a is a member having a rectangular parallelepiped shape. The peg body 26a supports the package support member 25a and the package support member 25b of the yarn supply package support portion 25 so as to be rotatable around the rotation shaft. The peg body 26a is provided with a regulation member 26c. The regulation member 26c has, for example, a disk shape. The regulation member 26c is disposed on one side surface of the peg body 26a. The regulation member 26c is attached by inserting the package support member 25a and the package support member 25b. The regulation member 26c faces the end surface of the yarn supply package PI and regulates the movement of the yarn supply package PI in the extending direction of the package support member 25a and the package support member 25b. An insertion hole 26d is formed in the peg body 26a. The first column 22a or the first column 22b of the creel stand 20 is inserted through the insertion hole 26d.

[0035] The rotation transmitting member 26b supports the peg body 26a. The peg body 26a is fixed to the upper end portion of the rotation transmitting member 26b. The rotation transmitting member 26b has a cylindrical shape. A hollow portion of the rotation transmitting member 26b communicates with the insertion hole 26d of the peg body 26a. The first columns 22a and 22b of the creel stand 20 are coaxially inserted through the rotation transmitting member 26b. The lower end portion of the rotation transmitting member 26b is provided with a second wheel 26e. In this embodiment, the second wheel 26e is a Geneva wheel that constitutes a Geneva mechanism. The second wheel 26e rotates by the driving of the first rotation driver 36a or the second rotation driver 37a of a rotation device 35 to be described later. The peg body 26 rotates with the rotation of the second wheel 26e. Accordingly, the yarn supply package support portion 25 rotates. The peg 24 rotates between an exchange position where the yarn supply bobbin B1 is collected and the yarn supply package PI is attached and a supply position where the yarn Y is supplied.

[0036] As illustrated in FIG. 1, the package replenishing device 6 supplies the yarn supply package PI to the package exchanging device 7. The package replenishing device 6 temporarily stores the yarn supply package PI transported by the first transporting device 3 and supplies the yarn supply package PI to the package exchanging device 7. The package replenishing device 6 stores the plurality of (for example, four) yarn supply packages P1. The package replenishing device 6 includes a transfer mechanism (not illustrated) which transfers the yarn supply package PI from the first transporting device 3.

[0037] The package exchanging device 7 collects the yarn supply bobbin B1 from the peg 24 and attaches the yarn supply package PI to the peg 24. As illustrated in FIG. 7, the package exchanging device 7 runs along the second rail R2. The second rail R2 is laid on a floor and extends in the X direction (the arrangement direction of the creel stands 20). That is, the package exchanging device 7 runs along the X direction. The package exchanging device 7 moves between one end of the yarn supply unit 5 and the other end of the yarn supply unit 5 where the package replenishing device 6 is disposed.

[0038] The package exchanging device 7 includes a running carrier (a running unit) 30, an elevating unit 31, a holding unit (a holding device) 32, and an exchange unit 33. Further, the package exchanging device 7 includes a control unit (not illustrated) which controls the operation of each unit.

[0039] The running carrier 30 includes a running base 30a and a column support portion 30b. The running base 30a has a rectangular parallelepiped shape. The running base 30a accommodates a wheel running along the second rail R2, a drive mechanism, and the like.

[0040] The column support portion 30b is provided upright on the running base 30a. The column support portion 30b includes four second columns 30c, 30d, 30e, and 30f and a wall portion 30g. The second columns 30c to 30f and the wall portion 30g extend in the Z direction. The second column 30c is disposed at one end portion in the X direction and one end portion in the Y direction in the running base 30a. The second column 30c is disposed at a corner portion of the running base 30a. The second column 30d is disposed at one end portion in the X direction and the other end portion in the Y direction in the running base 30a. The second column 30c and the second column 30d are disposed at positions facing each other in the Y direction. The second column 30d is disposed at a corner portion of the running base 30a.

[0041] The second column 30e is disposed at a position facing the second column 30c in the X direction so that a predetermined gap is formed with respect to the second column 30c. The second column 30f is disposed at the other end portion of the running base 30a in the Y direction between the second column 30c and the second column 30e in the X direction. The second column 30f is disposed so as to face the second column 30d in the X direction. The wall portion 30g extends in the X direction. The wall portion 30g is disposed at the other end portion in the X direction and the other end portion in the Y direction in the running base 30a. That is, the wall portion 30g is disposed at a corner portion of the running base 30a. The wall portion 30g is disposed so as to face the second column 30e in the Y direction and is disposed so

as to face the second column 30f in the X direction.

[0042] The elevating unit 31 moves up and down with the operator on board. The elevating unit 31 is used during maintenance or the like. The elevating unit 31 is disposed at the other end portion in the X direction in the running base 30a of the running carrier 30. The elevating unit 31 includes a guide portion 31a and an elevating portion 31b.

[0043] The guide portion 31a is a guide rail. The guide portion 31a is disposed in the wall portion 30g of the column support portion 30b of the running carrier 30. The guide portion 31a extends in the Z direction. The elevating portion 31b is a working table on which a work vehicle gets. The elevating portion 31b has a box shape. The elevating portion 31b is provided so as to be movable up and down in the Z direction along the guide portion 31a. The elevating portion 31b moves along the guide portion 31a by a drive mechanism (not illustrated).

[0044] The holding unit 32 holds the plurality of (for example, four) yarn supply packages P1. The holding unit 32 holds the yarn supply packages PI as many as the yarn supply packages PI held by the package replenishing device 6. The holding unit 32 receives the yarn supply package PI supplied from the package replenishing device 6, temporarily stores the yarn supply package PI, and supplies the yarn supply package PI to the exchange unit 33.

[0045] As illustrated in FIG. 8A and FIG. 8B, the holding unit 32 includes a main body frame 32a, a package support portion 32b, and a drive unit 32c. The main body frame 32a is disposed in the running base 30a of the running carrier 30. The main body frame 32a is disposed at one end portion of the running base 30a in the X direction.

[0046] The package support portion 32b supports the yarn supply package P1. The package support portion 32b is provided so as to be rotatable. The package support portion 32b rotates in the range of about 90°. The package support portion 32b rotates between a replenishment position (see FIG. 8B) in which the yarn supply package PI is supplied from the package replenishing device 6 and a supply position (see FIG. 8A) in which the yarn supply package PI is supplied to the exchange unit 33. The drive unit 32c rotates the package support portion 32b. The drive unit 32c is, for example, an air cylinder.

[0047] The exchange unit 33 exchanges the yarn supply bobbin B1 and the yarn supply package PI in the peg 24. Specifically, the exchange unit 33 collects the yarn supply bobbin B1 from the peg 24 and attaches the yarn supply package PI to the peg 24. As illustrated in FIG. 7, the exchange unit 33 is provided adjacent to the holding unit 32. As illustrated in FIG. 9, the exchange unit 33 includes a base 34, a rotation device 35, a collection device 40, a supply device 50, a yarn joining device 60, and a moving device 70.

[0048] The base 34 supports the rotation device 35, the collection device 40, the supply device 50, and the yarn joining device 60. The base 34 is provided so as to be movable up and down along the column support portion 30b of the running carrier 30. The base 34 is provided at a position accessible to the holding unit 32.

[0049] The rotation device 35 rotates the peg 24 of the creel stand 20. The rotation device 35 is fixed to the base 34. The rotation device 35 is disposed at a position facing the yarn supply unit 5 in the base 34. The rotation device 35 includes a first drive mechanism 36 and a second drive mechanism 37.

[0050] The first drive mechanism 36 rotates the first peg 24a of the creel stand 20. The first drive mechanism 36 includes a first rotation driver 36a and a first rotation arm portion 36b. The first rotation driver 36a rotates the second wheel 26e of the first peg 24a. The first rotation driver 36a is a Geneva driver that constitutes a Geneva mechanism. The first rotation driver 36a rotates by the rotational driving of a motor (not illustrated). The first rotation arm portion 36b supports the first rotation driver 36a. The first rotation arm portion 36b is provided so as to be swingable in the horizontal direction. The first rotation arm portion 36b is driven by, for example, a motor or an air cylinder (not illustrated).

[0051] The second drive mechanism 37 rotates the second peg 24b of the creel stand 20. The second drive mechanism 37 includes a second rotation driver 37a and a second rotation arm portion 37b. The second rotation driver 37a rotates the second wheel 26e of the second peg 24b. The second rotation driver 37a is a Geneva driver that constitutes a Geneva mechanism. The second rotation driver 37a rotates by the rotational driving of a motor (not illustrated). The second rotation arm portion 37b supports the second rotation driver 37a. The second rotation arm portion 37b is provided so as to be swingable in the horizontal direction. The second rotation arm portion 37b is driven by, for example, a motor or an air cylinder (not illustrated).

[0052] The rotation device 35 changes the direction of the peg 24 by rotating the peg 24 when attaching the yarn supply package PI to the peg 24. The rotation device 35 operates the first drive mechanism 36 or the second drive mechanism 37 corresponding to the target peg 24. For example, when the first drive mechanism 36 is operated, the rotation device 35 swings the first rotation arm portion 36b so that the first rotation driver 36a engages with the second wheel 26e of the first peg 24a. The rotation device 35 rotates the first rotation driver 36a in one direction when the first rotation driver 36a engages with the second wheel 26e. In the peg 24, when the second wheel 26e rotates, the rotation transmitting member 26b rotates. Accordingly, the peg 24 rotates so that the front end portions of the package support members 25a and 25b face the exchange unit 33.

[0053] The collection device 40 collects the yarn supply bobbin B1 to which the adapter 10 is attached from the peg 24. As illustrated in FIG. 10, the collection device 40 includes a first support mechanism 41 and a first collection drive mechanism 42. The first support mechanism 41 supports the yarn supply bobbin B1. Further, the first

support mechanism 41 moves forward and backward with respect to the peg 24 so as to collect the yarn supply bobbin B1. The first support mechanism 41 includes a first slide portion 41a and a first package support member 41b.

[0054] The first slide portion 41a includes a first linear guide 41c. A part of the first slide portion 41a can move in a predetermined direction through the first linear guide 41c. The first package support member 41b supports the yarn supply bobbin B1. The first package support member 41b is provided in a front end portion of the moving first slide portion 41a. The first package support member 41b extends in the extending direction of the first slide portion 41a.

[0055] The first collection drive mechanism 42 drives the first support mechanism 41. The first collection drive mechanism 42 includes a first slide rail 42a, a first collection drive unit 42b, a first elevating portion 42c, and a second collection drive unit 42d. The first slide rail 42a is connected to the first slide portion 41a. The first slide rail 42a moves a part of the first slide portion 41a in a reciprocating manner by the driving of the first collection drive unit 42b. The first collection drive unit 42b is, for example, an air cylinder. The first elevating portion 42c is connected to the first slide portion 41a. The first elevating portion 42c moves the first slide portion 41a up and down by the driving of the second collection drive unit 42d. Accordingly, the first slide portion 41a swings. The second collection drive unit 42d is, for example, a motor.

[0056] A collection operation of the yarn supply bobbin B1 by the collection device 40 will be described. The collection device 40 advances a part of the first slide portion 41a of the first support mechanism 41 by the first collection drive mechanism 42 with respect to the peg 24 rotated by the rotation device 35 so that the first package support member 41b is located in the hollow portion of the yarn supply bobbin B1. At this time, the collection device 40 swings the first slide portion 41a of the first support mechanism 41 downward by the first collection drive mechanism 42 so that the first package support member 41b is inclined with respect to the horizontal direction. When the first package support member 41b is located at the hollow portion of the yarn supply bobbin B1, the collection device 40 swings the first slide portion 41a upward by the first collection drive mechanism 42 so that the first package support member 41b becomes horizontal. Accordingly, the first package support member 41b contacts the yarn supply bobbin B1 so that the yarn supply bobbin B1 is lifted and the yarn supply bobbin B1 is separated from the package support members 25a and 25b. The collection device 40 retracts a part of the first slide portion 41a of the first support mechanism 41 by the first collection drive mechanism 42. As described above, the collection device 40 collects the yarn supply bobbin B1 from the peg 24.

[0057] The supply device 50 supplies the yarn supply package PI to the peg 24. As illustrated in FIG. 11, the supply device 50 includes a second support mechanism 51 and a second supply drive mechanism 52. The second support mechanism 51 supports the yarn supply package P1. Further, the second support mechanism 51 moves forward and backward with respect to the peg 24 so as to supply the yarn supply package P1. The second support mechanism 51 includes a second slide portion 51a and a second package support member 51b.

[0058] The second slide portion 51a includes a second linear guide 51c. A part of the second slide portion 51a can move in a predetermined direction through the second linear guide 51c. The second package support member 51b supports the yarn supply package P1. The second package support member 51b is provided in the front end portion of the moving second slide portion 51a. The second package support member 51b extends in the extending direction of the second slide portion 51a.

[0059] The second supply drive mechanism 52 drives the second support mechanism 51. The second supply drive mechanism 52 includes a second slide rail 52a, a first supply drive unit 52b, a second elevating portion 52c, and a second supply drive unit 52d. The second slide rail 52a is connected to the second slide portion 51a. The second slide rail 52a moves a part of the second slide portion 51a in a reciprocating manner by the driving of the first supply drive unit 52b. The first supply drive unit 52b is, for example, an air cylinder. The second elevating portion 52c is connected to the second slide portion 51a. The second elevating portion 52c moves the second slide portion 51a up and down by the driving of the second supply drive unit 52d. Accordingly, the second slide portion 51a swings. The second supply drive unit 52d is, for example, a motor.

[0060] An acquisition operation in which the supply device 50 acquires the yarn supply package PI from the holding unit 32 will be described. The supply device 50 acquires the yarn supply package PI from the holding unit 32 when the package exchanging device 7 moves. When the exchange unit 33 is stopped at a predetermined height position with respect to the holding unit 32, the supply device 50 advances a part of the second slide portion 51a of the second support mechanism 51 by the second supply drive mechanism 52 with respect to the yarn supply package PI supported by the package support portion 32b of the holding unit 32 so that the second package support member 51b is located in the hollow portion of the yarn supply package P1. At this time, the supply device 50 swings the second slide portion 51a of the second support mechanism 51 downward by the second supply drive mechanism 52 so that the second package support member 51b is inclined with respect to the horizontal direction. When the second package support member 51b is located at the hollow portion of the yarn supply package P1, the supply device 50 swings the second slide portion 51a upward by the second supply drive mechanism 52 so that the second package support member 51b becomes horizontal. Accordingly, the second package support member 51b contacts the yarn supply

package PI so that the yarn supply package PI is lifted and the yarn supply package PI is separated from the package support portion 32b. The supply device 50 retracts a part of the second slide portion 51a of the second support mechanism 51 by the second supply drive mechanism 52. As described above, the supply device 50 acquires the yarn supply package PI from the holding unit 32.

[0061] A supply operation in which the supply device 50 supplies the yarn supply package PI to the peg 24 will be described. The supply device 50 advances a part of the second slide portion 51a of the second support mechanism 51 by the second supply drive mechanism 52 with respect to the peg 24 from which the yarn supply bobbin B1 is separated so that the package support members 25a and 25b of the peg 24 are located in the hollow portion of the yarn supply package P1. When the package support members 25a and 25b of the peg 24 are located in the hollow portion of the yarn supply package PI, the supply device 50 swings the second slide portion 51a downward by the second supply drive mechanism 52 so that the second package support member 51b is inclined with respect to the horizontal direction. Accordingly, the package support members 25a and 25b of the peg 24 contact the yarn supply package PI so that the yarn supply package PI is supported by the peg 24 and the second package support member 51b is separated from the yarn supply package P1. The supply device 50 retracts a part of the second slide portion 51a of the second support mechanism 51 by the second supply drive mechanism 52. As described above, the supply device 50 attaches the yarn supply package PI to the peg 24.

[0062] The yarn joining device 60 joins the yarn Y of the yarn supply package PI supported by the first peg 24a and the yarn Y of the yarn supply package PI supported by the second peg 24b. As illustrated in FIGS. 12, 13, and 14, the yarn joining device 60 includes a catching and guiding mechanism 61, a first rotation mechanism (an operation mechanism) 62, a second rotation mechanism (an operation mechanism) 63, and a yarn joining mechanism 64.

[0063] The yarn joining device 60 is provided so as to be movable by a movement mechanism (not illustrated) in a direction (the Y direction) in which the exchange unit 33 faces the yarn supply unit 5. The yarn joining device 60 moves between a standby position in which the yarn joining device 60 is disposed in the base 34 and a yarn joining position in which the yarn joining device 60 moves toward the yarn supply unit 5 so as to advance outward in relation to the base 34.

[0064] The catching and guiding mechanism 61 catches the yarn Y of the yarn supply package PI and guides the yarn Y to the yarn joining mechanism 64. The catching and guiding mechanism 61 catches the first yarn end Y1 of the yarn Y of the yarn supply package PI supported by one peg 24 and the second yarn end Y2 of the yarn Y of the yarn supply package PI supported by the other peg 24 and guides the yarns to the yarn joining mechanism 64. The catching and guiding mechanism 61 includes a suction portion 61a and a yarn joining arm portion 61b.

[0065] The suction portion 61a sucks and catches the yarn Y The suction portion 61a includes a suction pipe 61c, a suction nozzle 61d, and a hook portion 61e. The suction nozzle 61d is provided in the front end portion of the suction pipe 61c. The suction nozzle 61d sucks the yarn Y A negative pressure source (not illustrated) is connected to the suction pipe 61c. Accordingly, a suction flow is generated in the suction nozzle 61d. The base end side of the suction pipe 61c is connected to the yarn joining arm portion 61b. The hook portion 61e is provided at a position facing the suction nozzle 61d and the front end portion of the suction pipe 61c. The hook portion 61e locks the yarn Y entangled by the yarn joining device 60. The yarn joining arm portion 61b moves the suction portion 61a. The yarn joining arm portion 61b includes a link mechanism and a plurality of motors. The yarn joining arm portion 61b is supported by a bracket 61f.

[0066] Each of the first rotation mechanism 62 and the second rotation mechanism 63 operates the peg 24 so as to rotate the yarn supply package P1. Each of the first rotation mechanism 62 and the second rotation mechanism 63 rotates the yarn supply package PI so that the yarn Y is fed from the yarn supply package PI when guiding the yarn Y to the yarn joining mechanism 64 by the catching and guiding mechanism 61.

[0067] The first rotation mechanism 62 operates the first peg 24a. The first rotation mechanism 62 includes a first yarn joining driver 62a, a first motor 62b, and a first yarn joining arm portion 62c. The first yarn joining driver 62a is rotatably and axially supported by the first yarn joining arm portion 62c. The first yarn joining driver 62a is provided with a first driven pulley 62d. The first motor 62b is fixed to the first yarn joining arm portion 62c. A first drive pulley 62e is connected to the output shaft of the first motor 62b. The first motor 62b drives the first drive pulley 62e so as to rotate about an axis. A first power transmission belt 62f is stretched over the first driven pulley 62d and the first drive pulley 62e. Accordingly, the first yarn joining driver 62a rotates by the rotational driving of the first motor 62b.

[0068] The second rotation mechanism 63 operates the second peg 24b. The second rotation mechanism 63 includes a second yarn joining driver 63a, a second motor 63b, and a second yarn joining arm portion 63c. The second yarn joining driver 63a is rotatably and axially supported by the second yarn joining arm portion 63c. The second yarn joining driver 63a is provided with a second driven pulley 63d. The second motor 63b is fixed to the second yarn joining arm portion 63c. The second drive pulley 63e is connected to the output shaft of the second motor 63b. The second motor 63b drives the second drive pulley 63e so as to rotate around a shaft. A second power transmission belt 63f is stretched over the second driven pulley 63d and the second drive pulley 63e. Accordingly, the second yarn joining driver 63a rotates by the rota-

tional driving of the second motor 63b.

[0069] The yarn joining mechanism 64 performs a yarn joining operation. The yarn joining mechanism 64 includes a splicer 66, a first guide mechanism 67, and a second guide mechanism 68.

[0070] The splicer 66 includes a yarn joining portion 66a and a pair of sandwiching mechanisms 66b and 66c. The yarn joining portion 66a entangles the yarn Y of the yarn supply package PI supported by the first peg 24a and the yarn Y of the yarn supply package PI supported by the second peg 24b. The sandwiching mechanisms 66b and 66c are provided at positions sandwiching the yarn joining portion 66a. The sandwiching mechanisms 66b and 66c sandwich the yarn Y inserted into the chamber of the yarn joining portion 66a.

[0071] As illustrated in FIGS. 12 and 13, the first guide mechanism 67 locks and guides the yarn Y The first guide mechanism 67 includes a first hook 67a, a second hook 67b, and a third hook 67c. The first hook 67a, the second hook 67b, and the third hook 67c are provided so as to be swingable. The first hook 67a is provided with a potentiometer (not illustrated) that detects a tension of the yarn Y. The yarn joining device 60 controls the operation of the first motor 62b of the first rotation mechanism 62 on the basis of the detection result of the potentiometer. That is, the yarn joining device 60 draws the yarn Y from the yarn supply package PI at a predetermined tension by adjusting the rotation amount (feed amount) of the yarn supply package P1 on the basis of the detection result of the potentiometer.

[0072] The second guide mechanism 68 locks and guides the yarn Y. The second guide mechanism 68 includes a first hook 68a, a second hook 68b, and a third hook 68c. The first hook 68a, the second hook 68b, and the third hook 68c are provided so as to be swingable. The first hook 68a is provided with a potentiometer (not illustrated) which detects the tension of the yarn Y The yarn joining device 60 controls the operation of the second motor 63b of the second rotation mechanism 63 on the basis of the detection result of the potentiometer. That is, the yarn joining device 60 adjusts the rotation amount (feed amount) of the yarn supply package P1 on the basis of the detection result of the potentiometer and draws the yarn Y from the yarn supply package PI with a predetermined tension.

[0073] A yarn joining operation of the yarn joining device 60 will be described. Specifically, an example of a case in which the yarn joining device 60 joins the first yarn end Y1 on the outer layer side of the yarn supply package PI supported by the first peg 24a and the second yarn end Y2 on the inner layer side of the yarn supply package PI supported by the second peg 24b will be described.

[0074] When the yarn joining operation starts, the yarn joining device 60 operates the first peg 24a by the first rotation mechanism 62 and operates the second peg 24b by the second rotation mechanism 63 so that the adapter 10 is rotated to a position in which the first yarn end Y1 and the second yarn end Y2 can be caught by the suction portion 61a as illustrated in FIG. 14. Specifically, in the first rotation mechanism 62, the first yarn joining driver 62a is engaged with the first wheel 25j of the first peg 24a and the first motor 62b is driven to rotate the first yarn joining driver 62a. Similarly, in the second rotation mechanism 63, the second yarn joining driver 63a is engaged with the first wheel 25j of the second peg 24b and the second motor 63b is driven to rotate the second yarn joining driver 63a. When the first yarn joining driver 62a and the second yarn joining driver 63a rotate, the yarn supply package PI supported by each of the first peg 24a and the second peg 24b rotates, so that the adapter 10 rotates. The yarn joining device 60 detects a detection object (not illustrated) provided in the adapter 10 by a sensor (not illustrated) and controls the first motor 62b and the second motor 63b on the basis of the detection result of the sensor so that the adapter 10 is rotated to a predetermined position.

[0075] When the adapter 10 is rotated, the yarn joining device 60 operates the yarn joining arm portion 61b of the catching and guiding mechanism 61 so that the suction portion 61a catches the first yarn end Y1 from the adapter 10 of the yarn supply package PI supported by the first peg 24a and catches the second yarn end Y2 from the adapter 10 of the yarn supply package PI supported by the second peg 24b. At this time, the yarn joining device 60 operates the first peg 24a by the first rotation mechanism 62 and operates the second peg 24b by the second rotation mechanism 63 so that the yarn supply package PI is rotated. Accordingly, the yarn Y is drawn out from the yarn supply package PI at a predetermined tension.

[0076] The yarn joining device 60 allows the suction portion 61a to hook the yarn Y having the first yarn end Y1 on the first guide mechanism 67 and guide the yarn Y to the splicer 66 and to hook the yarn Y having the second yarn end Y2 on the second guide mechanism 68 and guide the yarn Y to the splicer 66. When the yarn Y is guided to the splicer 66, the yarn joining device 60 performs the yarn joining operation of the splicer 66. Accordingly, the yarn joining device 60 joins the first yarn end Y1 on the outer layer side of the yarn supply package PI supported by the first peg 24a and the second yarn end Y2 on the inner layer side of the yarn supply package PI supported by the second peg 24b.

[0077] The moving device 70 rotationally moves the collection device 40, the supply device 50, and the yarn joining device 60. The moving device 70 moves each of the collection device 40, the supply device 50, and the yarn joining device 60 to a work position for the peg 24. Further, the moving device 70 moves the collection device 40 and the supply device 50 to a work position for the holding unit 32. As illustrated in FIG. 9, the moving device 70 includes a rotation support portion 71 and an exchange unit driving unit 72.

[0078] The rotation support portion 71 supports the collection device 40, the supply device 50, and the yarn

joining device 60. The rotation support portion 71 is provided in the base 34 so as to be rotatable around a rotation shaft extending in the vertical direction. The rotation support portion 71 supports the collection device 40, the supply device 50, and the yarn joining device 60 so that the collection device 40, the supply device 50, and the yarn joining device 60 are respectively disposed in three different directions when viewed from the direction of the rotation shaft of the rotation support portion 71.

[0079] The rotation support portion 71 includes a wheel (not illustrated). The wheel is a Geneva wheel that constitutes a Geneva mechanism. The exchange unit driving unit 72 rotates the rotation support portion 71. The exchange unit driving unit 72 is a Geneva driver that constitutes a Geneva mechanism. The exchange unit driving unit 72 rotates by the rotational driving of a motor (not illustrated). In the moving device 70, the rotation support portion 71 rotates by the driving of the exchange unit driving unit 72.

[0080] The moving device 70 stops the rotation support portion 71 at seven positions. The moving device 70 stops the rotation support portion 71 at a position in which the collection device 40 collects the yarn supply bobbin B1 from the first peg 24a, a position in which the collection device 40 collects the yarn supply bobbin B1 from the second peg 24b, a position in which the supply device 50 supplies the yarn supply package PI to the first peg 24a, a position in which the supply device 50 supplies the yarn supply package PI to the second peg 24b, a position in which the yarn joining device 60 performs a yarn joining operation, a position in which the supply device 50 acquires the yarn supply package PI from the holding unit 32, and a position in which the collection device 40 supplies the yarn supply bobbin B1 to the holding unit 32.

[0081] Next, the splicer 66 will be described in detail.

[0082] As illustrated in FIG. 15, the splicer 66 joins a first yarn YA (see FIG. 21A) which is a yarn (one yarn) Y of the yarn supply package PI supported by the first peg 24a and a second yarn YB (see FIG. 21A) which is a yarn (the other yarn) of the yarn supply package PI supported by the second peg 24b. The splicer 66 is a synthetic yarn splicer. The splicer 66 includes a frame 102, a yarn splicing portion 66a, a pair of clamping mechanisms 66b and 66c, a shutter mechanism 140, a cylindrical cam 150, and a motor 160.

[0083] The frame 102 is a member that holds each portion of the splicer 66. The frame 102 is configured by, for example, a plurality of plate-shaped members. The yarn splicing portion 66a is fixed to the frame 102. As illustrated in FIGS. 15 and 16, the yarn splicing portion 66a includes a yarn splicing nozzle 112, a slit 113, a chamber (passage) 114, and an air passage 116. The yarn splicing nozzle 112 is a block body that is formed of a metal or ceramic material. The slit 113 is provided in the yarn splicing nozzle 112. The slit 113 communicates with the chamber 114 and the slit 113 is a gap through which the first yarn YA and the second yarn YB are insertable into the chamber 114. The slit 113 is formed over the upper surface of the yarn splicing nozzle 112 and the chamber 114. The upper portion of the slit 113 is provided with an inclined surface 115 which guides the yarn to the slit 113.

[0084] The chamber 114 is a passage through which the first yarn YA and the second yarn YB are inserted. The chamber 114 penetrates one side surface and the other side surface of the yarn splicing nozzle 112. The penetrating direction of the chamber 114 (hereinafter, simply referred to as the "penetrating direction") is orthogonal to the inserting direction in which the first yarn YA and the second yarn YB are inserted into the slit 113 (hereinafter, simply referred to as the "inserting direction"). The chamber 114 forms a space through which the first yarn YA and the second yarn YB are insertable. The chamber 114 has a circular shape when viewed from a cross-section orthogonal to the penetrating direction.

[0085] The air passage 116 circulates air supplied to the chamber 114. The air passage 116 includes an injection hole 116a opening to the chamber 114. The injection hole 116a communicates the air passage 116 with the chamber 114. Air is injected from the injection hole 116a to the chamber 114. A connection portion 118 is provided on the upstream side of the air passage 116 (the side opposite to the injection hole 116a). A supply pipe 119 supplying air is connected to the connection portion 118.

[0086] As illustrated in FIGS. 15, 19, and 20, one clamping mechanism 66b includes a support portion 122, a first clamping portion 123, a third clamping portion 127, and a first cutter 129. The other clamping mechanism 66c includes a support portion 132, a second clamping portion 133, a fourth clamping portion 137, and a second cutter 139.

[0087] The support portion 122 has a rectangular parallelepiped (prismatic) external shape. The support portion 122 supports the first clamping portion 123, the third clamping portion 127, and the first cutter 129. The support portion 122 is provided in the frame 102 so as to be swingable. One end portion of the support portion 122 in the longitudinal direction is provided with a shaft 121 which is orthogonal to the penetrating direction. The shaft 121 is fixed to the frame 102. The other end portion from the center portion of the support portion 122 in the longitudinal direction accommodates the first clamping portion 123 and the third clamping portion 127.

[0088] The support portion 122 is provided with a concave portion 125. The concave portion 125 is provided in the other end portion of the support portion 122. The concave portion 125 exposes a part of the first clamping portion 123 and the third clamping portion 127. Such a support portion 122 swings around the shaft 121 so that the first clamping portion 123 and the third clamping portion 127 move in the penetrating direction (this will be described later in detail).

[0089] The first clamping portion 123 is disposed on one side of the yarn splicing portion 66a in the penetrating

direction. The first clamping portion 123 has a columnar shape and is formed of, for example, metal such as SUS having wear resistance. The first clamping portion 123 clamps the first yarn YA and the second yarn YB in a direction orthogonal to the penetrating direction and orthogonal to the axial direction of the shaft 121. Hereinafter, the direction orthogonal to the penetrating direction and orthogonal to the axial direction of the shaft 121 is referred to as the "clamping direction". The first clamping portion 123 includes a fixed side column 123x and a movable side column 123y. The fixed side column 123x and the movable side column 123y are disposed so that their cross-sections face each other in the clamping direction. The fixed side column 123x is fixed to the support portion 132. The movable side column 123y is provided in the support portion 132 so as to be movable in the clamping direction.

[0090] In the first clamping portion 123, the movable side column 123y moves so as to approach the fixed side column 123x so that the end surface of the fixed side column 123x comes into contact with the end surface of the movable side column 123y and the first yarn YA and the second yarn YB are clamped therebetween. In the first clamping portion 123, the movable side column 123y moves so as to be away from the fixed side column 123x so that a gap is formed between the end surface of the fixed side column 123x and the end surface of the movable side column 123y and the clamping is released. The clamping of the first clamping portion 123 and the releasing of the clamping can be realized by various known techniques and can be realized by, for example, air driving using air supplied from the outside or a cam mechanism. The first clamping portion 123 urges and clamps the first yarn YA and the second yarn YB in the clamping direction by an urging member (not illustrated) such as a spring.

[0091] The third clamping portion 127 is disposed on one side of the first clamping portion 123 in the penetrating direction. The third clamping portion 127 has a columnar shape and is formed of, for example, metal such as SUS having wear resistance. The third clamping portion 127 clamps the first yarn YA in the clamping direction. The third clamping portion 127 includes a fixed side column 127x and a movable side column 127y. The fixed side column 127x and the movable side column 127y are disposed so that their end surfaces face each other in the clamping direction. The fixed side column 127x is fixed to the support portion 132. The movable side column 127y is provided in the support portion 132 so as to be movable in the clamping direction.

[0092] In the third clamping portion 127, the movable side column 127y moves so as to approach the fixed side column 127x so that the end surface of the fixed side column 127x comes into contact with the end surface of the movable side column 127y and the first yarn YA is clamped therebetween. In the third clamping portion 127, the movable side column 127y moves so as to be away from the fixed side column 127x so that a gap is formed between the end surface of the fixed side column 127x and the end surface of the movable side column 127y and the clamping is released. The clamping of the third clamping portion 127 and the releasing of the clamping can be realized by various known techniques and can be realized by, for example, air driving using air supplied from the outside or a cam mechanism. The third clamping portion 127 urges and clamps the first yarn YA in the clamping direction by an urging member (not illustrated) such as a spring. A force of clamping the first yarn YA by the third clamping portion 127 is smaller than a force of clamping the first yarn YA and the second yarn YB by the first clamping portion 123.

[0093] The first cutter 129 cuts the second yarn YB on one side of the first clamping portion 123 in the penetrating direction. The first cutter 129 is provided so as to be movable in the clamping direction between the first clamping portion 123 and the third clamping portion 127 of the support portion 132. The first cutter 129 moves to a position in which the second yarn YB is cuttable in synchronization with the operation in which the first clamping portion 123 clamps the first yarn YA and the second yarn YB. Specifically, the first cutter 129 is connected to the movable side column 123y of the first clamping portion 123. The first cutter 129 is located so as to straddle the second yarn YB while the first clamping portion 123 sandwiches the first yarn YA and the second yarn YB. In this case, when the second yarn YB is moved to be away from the first clamping portion 123 in the inserting direction, the second yarn YB is cut by the first cutter 129. Meanwhile, the first cutter 129 is located at a position separated from the second yarn YB in the clamping direction while the clamping of the first yarn YA and the second yarn YB using the first clamping portion 123 is released.

[0094] The support portion 132 has a rectangular parallelepiped (prismatic) external shape. The support portion 132 supports the second clamping portion 133, the fourth clamping portion 137, and the second cutter 139. The support portion 132 is provided in the frame 102 so as to be swingable. One end portion of the support portion 132 in the longitudinal direction is provided with a shaft 131 which is orthogonal to the penetrating direction. The shaft 131 is fixed to the frame 102. The other end portion from the center of the support portion 132 in the longitudinal direction accommodates the second clamping portion 133 and the fourth clamping portion 137.

[0095] The support portion 132 is provided with a concave portion 135. The concave portion 135 is provided in the other end portion of the support portion 132. The concave portion 135 exposes a part of the second clamping portion 133 and the fourth clamping portion 137. Such a support portion 132 swings around the shaft 121 so that the second clamping portion 133 and the fourth clamping portion 137 move in the penetrating direction (this will be described later).

[0096] The second clamping portion 133 is disposed on the other side of the yarn splicing portion 66a in the

penetrating direction. The second clamping portion 133 has a columnar shape and is formed of, for example, metal such as SUS having wear resistance. The second clamping portion 133 clamps the first yarn YA and the second yarn YB in the clamping direction. The second clamping portion 133 includes a fixed side column 133x and a movable side column 133y. The fixed side column 133x and the movable side column 133y are disposed so that their end surfaces face each other in the clamping direction. The fixed side column 133x is fixed to the support portion 132. The movable side column 133y is provided in the support portion 132 so as to be movable in the clamping direction.

[0097] In the second clamping portion 133, the movable side column 133y moves so as to approach the fixed side column 133x so that the end surface of the fixed side column 133x comes into contact with the end surface of the movable side column 133y and the first yarn YA and the second yarn YB are clamped therebetween. In the second clamping portion 133, the movable side column 133y moves so as to be away from the fixed side column 133x so that a gap is formed between the end surface of the fixed side column 133x and the end surface of the movable side column 133y and the clamping is released. The clamping of the second clamping portion 133 and the releasing of the clamping can be realized by various known techniques and can be realized by, for example, air driving using air supplied from the outside or a cam mechanism. The second clamping portion 133 urges and clamps the first yarn YA and the second yarn YB in the clamping direction by an urging member (not illustrated) such as a spring. A force of clamping the first yarn YA and the second yarn YB by the second clamping portion 133 is the same as a force of clamping the first yarn YA and the second yarn YB by the first clamping portion 123.

[0098] The fourth clamping portion 137 is disposed on one side of the second clamping portion 133 in the penetrating direction. The fourth clamping portion 137 has a columnar shape and is formed of, for example, metal such as SUS having wear resistance. The fourth clamping portion 137 clamps the second yarn YB in the clamping direction. The fourth clamping portion 137 includes a fixed side column 137x and a movable side column 137y. The fixed side column 137x and the movable side column 137y are disposed so that their end surfaces face each other in the clamping direction. The fixed side column 137x is fixed to the support portion 132. The movable side column 137y is provided in the support portion 132 so as to be movable in the clamping direction.

[0099] In the fourth clamping portion 137, the movable side column 137y moves so as to approach the fixed side column 137x so that the end surface of the fixed side column 137x comes into contact with the end surface of the movable side column 137y and the second yarn YB is clamped therebetween. In the fourth clamping portion 137, the movable side column 137y moves so as to be away from the fixed side column 137x so that a gap is formed between the end surface of the fixed side column 137x and the end surface of the movable side column 137y and the clamping is released. The clamping of the fourth clamping portion 137 and the releasing of the clamping can be realized by various known techniques and can be realized by, for example, air driving using air supplied from the outside or a cam mechanism. The fourth clamping portion 137 urges and clamps the second yarn YB in the clamping direction by an urging member (not illustrated) such as a spring. A force of clamping the second yarn YB by the fourth clamping portion 137 is smaller than a force of clamping the first yarn YA and the second yarn YB by the second clamping portion 133. A force of clamping the second yarn YB by the fourth clamping portion 137 is the same as a force of clamping the first yarn YA by the third clamping portion 127.

[0100] The second cutter 139 cuts the first yarn YA at a position on the other side of the second clamping portion 133 in the penetrating direction. The second cutter 139 is provided so as to be movable in the clamping direction between the second clamping portion 133 and the fourth clamping portion 137 of the support portion 132. The second cutter 139 moves to a position in which the first yarn YA is cuttable in synchronization with the operation in which the second clamping portion 133 clamps the first yarn YA and the second yarn YB. Specifically, the second cutter 139 is connected to the movable side column 133y of the second clamping portion 133 as illustrated in FIGS. 18A and 18B. The second cutter 139 is located so as to straddle the first yarn YA while the second clamping portion 133 clamps the first yarn YA and the second yarn YB. In this case, when the first yarn YA is moved so as to be away from the second clamping portion 133 in the inserting direction, the first yarn YA is cut by the second cutter 139. On the other hand, the second cutter 139 is located at a position separated from the first yarn YA in the clamping direction while the clamping of the first yarn YA and the second yarn YB using the second clamping portion 133 is released.

[0101] As illustrated in FIGS. 15, 17, and 20, the shutter mechanism 140 constitutes a shutter portion capable of closing at least a part of the chamber 114 of the yarn splicing portion 66a. The shutter mechanism 140 closes any one of the first clamping portion 123 and the second clamping portion 133 that is farther from the yarn splicing portion 66a in the chamber 114 when the first yarn YA and the second yarn YB are entangled by the yarn splicing portion 66a. The shutter mechanism 140 includes a first shutter 141 which is disposed on one side of the yarn splicing portion 66a in the penetrating direction and a second shutter 142 which is disposed on the other side of the yarn splicing portion 66a in the penetrating direction.

[0102] The first shutter 141 can close one side of the chamber 114 in the penetrating direction. The second shutter 142 can close the other side of the chamber 114 in the penetrating direction. The first shutter 141 and the

second shutter 142 have a plate shape. The first shutter 141 is opened and closed between an open state in which one side of the chamber 114 in the penetrating direction is opened and a closed state in which one side of the chamber 114 in the penetrating direction is closed at the front end portion thereof. The second shutter 142 is opened and closed between an open state in which the other side of the chamber 114 in the penetrating direction is opened and a closed state in which the other side of the chamber 114 in the penetrating direction is closed at the front end portion thereof. Such a shutter mechanism 140 closes any one of the first shutter 141 and the second shutter 142 when performing the entangling operation by the yarn splicing portion 66a (this will be described later in detail).

[0103] The cylindrical cam 150 has a columnar external shape. The cylindrical cam 150 is supported by the frame 102 so as to be rotatable around a rotation shaft following the penetrating direction. The outer peripheral surface of the cylindrical cam 150 is provided with a first cam groove 151 and a second cam groove 152. A shutter annular groove 153 is formed in the outer peripheral surface of the cylindrical cam 150 between the first cam groove 151 and the second cam groove 152.

[0104] As illustrated in FIG. 19, a first clamping portion follower (first follower) 154 engages with the first cam groove 151. The first clamping portion follower 154 is connected to the center portion of the support portion 122 of the clamping mechanism 66b in the longitudinal direction. The first clamping portion follower 154 moves in a following manner along the first cam groove 151. The first cam groove 151 realizes the movement of the support portion 132 by rotating the cylindrical cam 150 so that the first clamping portion follower 154 is desirably moved in a following manner.

[0105] A second clamping portion follower (second follower) 155 engages with the second cam groove 152. The second clamping portion follower 155 is connected to the center portion of the support portion 132 of the clamping mechanism 66c in the longitudinal direction. The second clamping portion follower 155 moves in a following manner along the second cam groove 152. The second cam groove 152 realizes the movement of the support portion 122 to be described later by rotating the cylindrical cam 150 so that the second clamping portion follower 155 is desirably moved in a following manner.

[0106] As illustrated in FIG. 17, a first shutter follower (follower) 157 and a second shutter follower (follower) 158 engage with the shutter annular groove 153. The first shutter follower 157 and the second shutter follower 158 are attached to the frame 102 so as to be swingable around a shaft 159.

[0107] One side of the first shutter follower 157 is connected to the base end portion of the first shutter 141 of the shutter mechanism 140. The other side of the first shutter follower 157 comes into contact with the bottom surface of the shutter annular groove 153. One side of the second shutter follower 158 is connected to the base end portion of the second shutter 142 of the shutter mechanism 140. The other side of the second shutter follower 158 comes into contact with the bottom surface of the shutter annular groove 153. The first shutter follower 157 and the second shutter follower 158 move according to the height of the bottom surface of the shutter annular groove 153. The first shutter follower 157 and the second shutter follower 158 are urged by a torsion spring 159a so as to swing in an open direction in which the first shutter 141 and the second shutter 142 are opened.

[0108] The bottom surface of the shutter annular groove 153 is provided with a raised portion 156. When each of the first shutter follower 157 and the second shutter follower 158 rides on the raised portion 156, the first shutter follower 157 and the second shutter follower 158 respectively swing in the closing direction (a swing direction opposite to the opening direction) so that the first shutter 141 and the second shutter 142 are respectively closed. When each of the first shutter follower 157 and the second shutter follower 158 comes into contact with a portion other than the raised portion 156 in the bottom surface of the shutter annular groove 153, the first shutter follower 157 and the second shutter follower 158 respectively swing in the opening direction so that the first shutter 141 and the second shutter 142 are respectively opened. The shutter annular groove 153 realizes the opening and closing of the first shutter 141 and the second shutter 142 to be described later by rotating the cylindrical cam 150 so that the first shutter follower 157 and the second shutter follower 158 are desirably swung.

[0109] The motor 160 is a drive source that rotationally drives the cylindrical cam 150. The motor 160 is supported by the frame 102. The rotation of the motor 160 is controlled by a control unit (not illustrated). As described above, the cylindrical cam 150, the first clamping portion follower 154, the second clamping portion follower 155, and the motor 160 constitute a moving mechanism 170 that moves each of the first clamping portion 123 and the second clamping portion 133 in the penetrating direction. The cylindrical cam 150 constitutes a shutter cam. The cylindrical cam 150, the first shutter follower 157, the second shutter follower 158, and the motor 160 constitute an opening and closing mechanism 180 that opens and closes the shutter mechanism 140.

[0110] Next, the operation of the splicer 66 will be described with reference to FIGS. 20A to 28.

[0111] Additionally, in FIGS. 20A to 28, for convenience of description, the movement of the support portions 122 and 132 by the swinging of the clamping mechanisms 66b and 66c is expressed as the linear movement in the penetrating direction. In the description below, for convenience of description, one side in the penetrating direction is referred to as the "left side" and the other side in the penetrating direction is referred to as the "right side". The movement of the support portion 122 corresponds to the movement of the first clamping portion 123 and the third clamping portion 127 and the movement of the support portion 132 corresponds to the movement of

the second clamping portion 133 and the fourth clamping portion 137.

[0112] As illustrated in FIG. 20A, in the initial state, the clamping of the first to fourth clamping portions 123, 133, 127, and 137 is released, the support portion 122 is close to the yarn splicing portion 66a, and the support portion 132 is close to the yarn splicing portion 66a. The first shutter 141 and the second shutter 142 are in the open state. In the initial state, for example, the capturing and guiding mechanism (the yarn capturing and guiding unit) 61 catches the first yarn YA and the second yarn YB so that the yarns are inserted into the chamber 114 and the first yarn YA and the second yarn YB are inserted between the fixed side columns 123x, 133x, 127x, and 137x and the movable side columns 123y, 133y, 127y, and 137y of the first to fourth clamping portions 123, 133, 127, and 137.

[0113] As illustrated in FIG. 20B, the first yarn YA and the second yarn YB are respectively clamped by the first clamping portion 123 and the second clamping portion 133 while the first clamping portion 123 and the second clamping portion 133 are in the clamped state. At this time, the first cutter 129 and the second cutter 139 move in a synchronization manner so that the first cutter 129 moves on the second yarn YB and the second cutter 139 moves on the first yarn YA.

[0114] As illustrated in FIG. 21A, the yarn end side of the first yarn YA is raised so as to be away from the second clamping portion 133 and the yarn end side of the second yarn YB is raised so as to be away from the first clamping portion 123. Accordingly, the first yarn YA is cut by the second cutter 139 and the second yarn YB is cut by the first cutter 129.

[0115] As illustrated in FIG. 21B, the third clamping portion 127 and the fourth clamping portion 137 are in the clamped state so that the first yarn YA is clamped by the third clamping portion 127 and the second yarn YB is clamped by the fourth clamping portion 137. As illustrated in FIG. 22A, each of the support portions 122 and 132 is moved so as to be away from the yarn splicing portion 66a. Accordingly, in a state in which the first yarn YA and the second yarn YB are clamped by the first clamping portion 123 and the second clamping portion 133, the first clamping portion 123 and the second clamping portion 133 are moved in the penetrating direction so that a gap therebetween (a distance in the penetrating direction) increases and the first yarn YA and the second yarn YB between the first clamping portion 123 and the second clamping portion 133 are stretched to, for example, 1.6 times (a stretching process).

[0116] As illustrated in FIG. 22B, each of the support portions 122 and 132 is moved so as to approach the yarn splicing portion 66a. Accordingly, in a state in which the first yarn YA and the second yarn YB are respectively clamped by the first clamping portion 123 and the second clamping portion 133, the first clamping portion 123 and the second clamping portion 133 are moved in the penetrating direction so that a gap therebetween decreases and the stretched portion stretched by the stretching process in the first yarn YA and the second yarn YB is slackened. Later or simultaneously, the stretched portions of the first yarn YA and the second yarn YB are entangled by the yarn splicing portion 66a (a first entangling process). As illustrated in FIG. 23A, the support portion 122 is moved to the left so as to remove the slack of an entangled portion M1 of the first yarn YA and the second yarn YB formed by the first entangling process.

[0117] As illustrated in FIG. 23B, the clamping of the first yarn YA and the second yarn YB using the second clamping portion 133 is released. The support portion 122 is further moved to the left so that the first clamping portion 123 and the third clamping portion 127 are moved to the left. Accordingly, also in the first clamping portion 123 and the third clamping portion 127, the first yarn YA and the second yarn YB are pulled so that the first yarn YA and the second yarn YB are shifted to the left. That is, in a state in which the first yarn YA and the second yarn YB are clamped by the first clamping portion 123 and the clamping of the second clamping portion 133 is released, the first clamping portion 123 is moved to the left so that a first portion K1 clamped by the second clamping portion 133 before the releasing in the first yarn YA and the second yarn YB is moved to the left (a first moving process). As a result, the first portion K1 is inserted through the chamber 114 of the yarn splicing portion 66a.

[0118] As illustrated in FIG. 24A, the support portion 122 moved to the left is returned to the right by a smaller amount than the movement amount. Accordingly, the entangled portion M1 and the first portion K1 are slackened. The first shutter 141 is in the closed state and the second shutter 142 is in the open state. As illustrated in FIG. 24B, the first portion K1 of the first yarn YA and the second yarn YB is entangled by the yarn splicing portion 66a so as to form an entangled portion M2 (a second entangling process). In the second entangling process, the left side (any one of the first clamping portion 123 and the second clamping portion 133 that is farther from the yarn splicing portion 66a) of the chamber 114 is closed by the first shutter 141 of the shutter mechanism 140.

[0119] As illustrated in FIG. 25A, the first shutter 141 is in the open state and the support portion 122 is moved to the left so as to remove the slack of the entangled portion M1 and the entangled portion M2. As illustrated in FIG. 25B, the second clamping portion 133 is in the clamped state and the support portions 122 and 132 are moved to the right at the same time so that the first to fourth clamping portions 123, 133, 127, and 137 are moved to the right at the same time.

[0120] As illustrated in FIG. 26A, the clamping of the first yarn YA and the second yarn YB using the first clamping portion 123 is released. The support portion 132 is further moved to the right so that the second clamping portion 133 and the fourth clamping portion 137 are moved to the right. Accordingly, also in the second clamping portion 133 and the fourth clamping portion 137, the

first yarn YA and the second yarn YB are pulled so that the first yarn YA and the second yarn YB are shifted to the right. That is, in a state in which the first yarn YA and the second yarn YB are clamped by the second clamping portion 133 and the clamping of the first clamping portion 123 is released, the second clamping portion 133 is moved to the right so that a second portion K2 clamped by the first clamping portion 123 before the releasing in the first yarn YA and the second yarn YB is moved to the right (a second moving process). As a result, the second portion K2 is inserted through the chamber 114 of the yarn splicing portion 66a.

[0121] As illustrated in FIG. 26B, the support portion 132 moved to the right is returned to the left by a smaller amount than the movement amount. Accordingly, the entangled portions M1 and M2 and the second portion K2 are slackened. As illustrated in FIG. 27A, the first shutter 141 is in the open state and the second shutter 142 is in the closed state. As illustrated in FIG. 27B, a second portion K2 of the first yarn YA and the second yarn YB is entangled by the yarn splicing portion 66a so as to form an entangled portion M3 (a third entangling process). In the third entangling process, the right side (any one of the first clamping portion 123 and the second clamping portion 133 that is farther from the yarn splicing portion 66a) of the chamber 114 is closed by the second shutter 142 of the shutter mechanism 140. Then, the second shutter 142 is in the open state.

[0122] As illustrated in FIG. 28, each of the support portions 122 and 132 is moved to a position in which a portion stretched by the stretching process with respect to the initial position is equally distributed. Finally, the clamping of all the first to fourth clamping portions 123, 133, 127, and 137 is released and ended.

[0123] As described above, in the splicer 66, the first yarn YA and the second yarn YB can be entangled by the first entangling process. In addition, the first portion K1 clamped by the second clamping portion 133 in the first yarn YA and the second yarn YB can be pulled and moved by the first clamping portion 123 and can be entangled by the second entangling process. Accordingly, it is possible to shorten the length of the yarn end protruding from the entangled portion of the first yarn YA and the second yarn YB. The tail passage rate can be increased.

[0124] In the splicer 66, at least one of the first clamping portion 123 and the second clamping portion 133 is moved in the penetrating direction so that a gap therebetween increases in a state in which the first yarn YA and the second yarn YB are respectively clamped by the first clamping portion 123 and the second clamping portion 133 so as to perform the stretching process of stretching the first yarn YA and the second yarn YB before the first entangling process. In the first entangling process, the stretched portions stretched by the stretching process in the first yarn YA and the second yarn YB are entangled. Accordingly, it is possible to prevent the entangled portion of the first yarn YA and the second yarn YB from being thicker than the other portion.

[0125] In the splicer 66, the second moving process is performed after the second entangling process so as to move the second clamping portion 133 to the other side in the penetrating direction so that the second portion K2 clamped by the first clamping portion 123 before the releasing in the first yarn YA and the second yarn YB is moved to the other side in the penetrating direction in a state in which the first yarn YA and the second yarn YB are clamped by the second clamping portion 133 and the clamping of the first clamping portion 123 is released. The yarn splicing portion 66a performs the third entangling process of entangling the second portion K2 of the first yarn YA and the second yarn YB after the second moving process. Accordingly, the second portion K2 clamped by the first clamping portion 123 in the first yarn YA and the second yarn YB can be pulled and moved by the second clamping portion 133 and can be entangled by the third entangling process. As a result, it is possible to shorten the length of the yarn end protruding from the entangled portion of the first yarn YA and the second yarn YB.

[0126] The splicer 66 includes the third clamping portion 127 and the fourth clamping portion 137. In this case, it is possible to prevent the yarn Y from coming off from the chamber 114 of the yarn splicing portion 66a by the clamping of the third clamping portion 127 and the fourth clamping portion 137. Further, since a force of clamping the yarn Y by the third clamping portion 127 and the fourth clamping portion 137 is smaller than a force of clamping the yarn Y by the first clamping portion 123 and the second clamping portion 133, it is easy to pull and move the yarn Y (the first yarn YA and the second yarn YB) by, for example, the first moving process or the second moving process.

[0127] The splicer 66 includes the first cutter 129 and the second cutter 139. Accordingly, it is possible to further shorten the length of the yarn end protruding from the entangled portion of the first yarn YA and the second yarn YB. Furthermore, it is possible to perform a yarn splicing operation so that the yarn end does not protrude from the entangled portion (the yarn end is embedded while being entangled with the core yarn). In addition, the yarn end can be zero mm. Further, it is possible to prevent a difference in skill level from affecting the production amount compared to the operation of manually cutting the yarn end.

[0128] In the splicer 66, the first cutter 129 moves to a position in which the second yarn YB is cuttable in synchronization with the operation in which the first clamping portion 123 clamps the first yarn YA and the second yarn YB. The second cutter 139 moves to a position in which the first yarn YA is cuttable in synchronization with the operation in which the second clamping portion 133 clamps the first yarn YA and the second yarn YB. Accordingly, the first cutter 129 and the second cutter 139 can be operated efficiently.

[0129] In the splicer 66, the first clamping portion 123

and the second clamping portion 133 are respectively swingable around the shafts 121 and 131 intersecting the penetrating direction. The moving mechanism 170 includes the cylindrical cam 150 which includes the first cam groove 151 and the second cam groove 152, the first clamping portion follower 154 which moves in a following manner along the first cam groove 151, the second clamping portion follower 155 which moves in a following manner along the second cam groove 152, and the motor 160 which rotationally drives the cylindrical cam 150. According to such a configuration, the movement of the first clamping portion 123 and the second clamping portion 133 in the penetrating direction can be realized by swinging the first clamping portion 123 and the second clamping portion 133 using the moving mechanism 170 which is the cam mechanism.

[0130] Although the embodiment of the invention has been described above, the invention is not necessarily limited to the above-described embodiment and various modifications can be made without departing from the spirit of the invention.

[0131] In the above-described embodiment, the first to fourth clamping portions 123, 133, 127, and 137 are not limited to the columnar shape as long as the shape can clamp the yarn Y, but can be various shapes (for example, a prismatic shape or the like). In the above-described embodiment, the moving mechanism 170 is not particularly limited, but various known moving mechanisms can be used. In the above-described embodiment, the opening and closing mechanism 180 is not particularly limited, but various known opening and closing mechanisms may be used. In the above-described embodiment, the shutter mechanism 140 includes the first shutter 141 and the second shutter 142, but the shutter mechanism 140 may include any one of the first shutter 141 and the second shutter 142.

[0132] In the above-described embodiment, an example has been described in which the support portions 122 and 132 swing around the shafts 121 and 131 so that the first clamping portion 123 and the second clamping portion 133 respectively move in the penetrating direction. However, the support portions 122 and 132 may move, for example, in a direction moving close to each other and a direction moving away from each other in a parallel state. In the above-described embodiment, the diameter of the chamber 114 and the diameter of the injection hole 116a can be changed by exchanging the yarn splicing portion 66a.

REFERENCE SIGNS LIST

[0133] 66...splicer(synthetic yarn splicer), 66a...yarn splicing portion, 114...chamber(passage), 116a... injection hole, 121, 131...shaft, 123...first clamping portion, 127.. third clamping portion, 129...first cutter, 133...second clamping portion, 139... second cutter, 137...fourth clamping portion, 140...shutter mechanism(shutter portion), 141... first shutter, 142... second shutter, 150...cylindrical cam(shutter cam), 151...first cam groove, 152...second cam groove, 154...first clamping portion follower(first follower), 155...second clamping portion follower(second follower), 157...first shutter follower(follower), 158...second shutter follower(follower), 160...motor, 170...moving mechanism, 180...closing mechanism, K1...first portion, K2...second portion, YA...first yarn(one yarn), YB...second yarn(other yarn).

Claims

1. A synthetic yarn splicer (66) for splicing one yarn (YA) and the other yarn (YB) made of synthetic fibers, comprising:

   a yarn splicing portion (66a) that has a passage (114) forming a space into which the one yarn (YA) and the other yarn (YB) are insertable and entangles the one yarn (YA) and the other yarn (YB) inserted through the passage (114);
   a first clamping portion (123) that is disposed on one side of the yarn splicing portion (66a) in a penetrating direction of the passage (114) and clamps the one yarn (YA) and the other yarn (YB);
   a second clamping portion (133) that is disposed on the other side of the yarn splicing portion (66a) in the penetrating direction and clamps the one yarn (YA) and the other yarn (YB); and
   a moving mechanism (170) that moves each of the first clamping portion (123) and the second clamping portion (133) along the penetrating direction,
   wherein the moving mechanism (170) performs a first moving process of moving the first clamping portion (123) to one side in the penetrating direction and moving a first portion (K1) clamped by the second clamping portion (133) before releasing in the one yarn (YA) and the other yarn (YB) to one side in the penetrating direction while the one yarn (YA) and the other yarn (YB) are clamped by the first clamping portion (123) and the clamping of the second clamping portion (133) is released, and
   wherein the yarn splicing portion (66a) performs a first entangling process of entangling the one yarn (YA) and the other yarn (YB) before the first moving process and performs a second entangling process of entangling the first portion (K1) of the one yarn (YA) and the other yarn (YB) after the first moving process.

2. The synthetic yarn splicer (66) according to claim 1, wherein the moving mechanism (170) performs a stretching process of stretching the one yarn (YA) and the other yarn (YB) by moving at least one of the first clamping portion (123) and the second

clamping portion (133) along the penetrating direction so that a gap between the first clamping portion (123) and the second clamping portion (133) increases while the one yarn (YA) and the other yarn (YB) are respectively clamped by the first clamping portion (123) and the second clamping portion (133) before the first entangling process, and
wherein in the first entangling process, stretched portions stretched by the stretching process in the one yarn (YA) and the other yarn (YB) are entangled.

3. The synthetic yarn splicer (66) according to claim 1 or 2,
wherein the moving mechanism (170) performs a second moving process of moving the second clamping portion (133) to the other side in the penetrating direction and moving a second portion (K2) clamped by the first clamping portion (123) before releasing in the one yarn (YA) and the other yarn (YB) to the other side in the penetrating direction while the one yarn (YA) and the other yarn (YB) are clamped by the second clamping portion (133) and the clamping of the first clamping portion (123) is released after the second entangling process, and
wherein the yarn splicing portion (66a) performs a third entangling process of entangling the second portion (K2) of the one yarn (YA) and the other yarn (YB) after the second moving process.

4. The synthetic yarn splicer (66) according to any one of claims 1 to 3, further comprising:

a third clamping portion (127) that is disposed on one side of the first clamping portion (123) in the penetrating direction and clamps the one yarn (YA); and
a fourth clamping portion (137) that is disposed on the other side of the second clamping portion (133) in the penetrating direction and clamps the other yarn (YB),
wherein a force of clamping the yarn by the third clamping portion (127) and the fourth clamping portion (137) is smaller than a force of clamping the yarn by the first clamping portion (123) and the second clamping portion (133).

5. The synthetic yarn splicer (66) according to any one of claims 1 to 4, further comprising:

a first cutter (129) that cuts the other yarn (YB) at a position on one side of the first clamping portion (123) in the penetrating direction; and
a second cutter (139) that cuts the one yarn (YA) at a position on the other side of the second clamping portion (133) in the penetrating direction.

6. The synthetic yarn splicer (66) according to claim 5,
wherein the first cutter (129) moves to a position in which the other yarn (YB) is cuttable in synchronization with an operation in which the first clamping portion (123) clamps the one yarn (YA) and the other yarn (YB), and
wherein the second cutter (139) moves to a position in which the one yarn (YA) is cuttable in synchronization with an operation in which the second clamping portion (133) clamps the one yarn (YA) and the other yarn (YB).

7. The synthetic yarn splicer (66) according to any one of claims 1 to 6,
wherein each of the first clamping portion (123) and the second clamping portion (133) is swingable around a shaft (121, 131) intersecting the penetrating direction, and
wherein the moving mechanism (170) includes a cylindrical cam (150) provided with a first cam groove (151) and a second cam groove (152), a first follower (154) connected to the first clamping portion (123) and moving in a following manner along the first cam groove (151), a second follower (155) connected to the second clamping portion (133) and moving in a following manner along the second cam (152) groove, and a motor (160) rotationally driving the cylindrical cam (150).

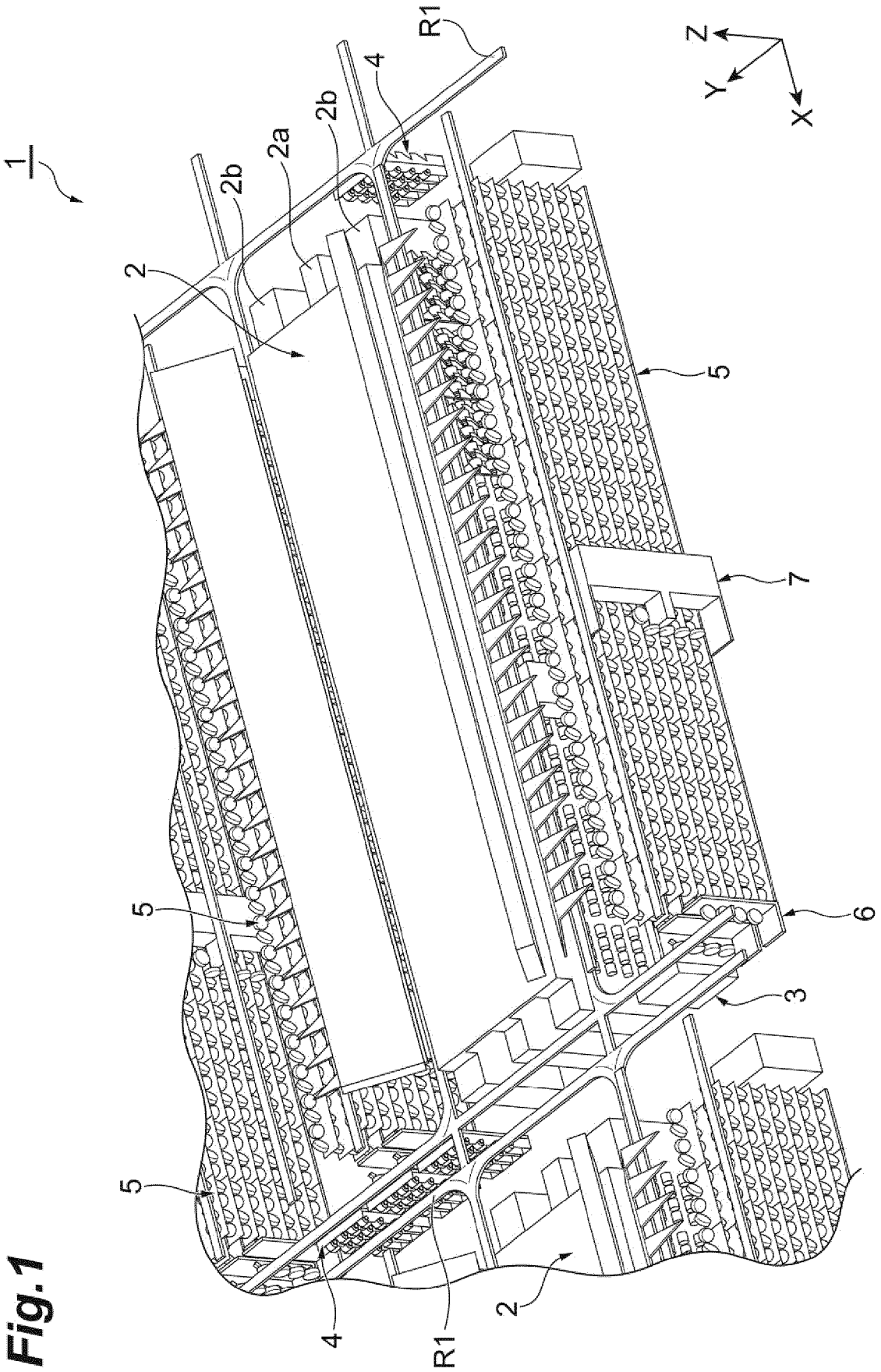

Fig.1

Fig.2

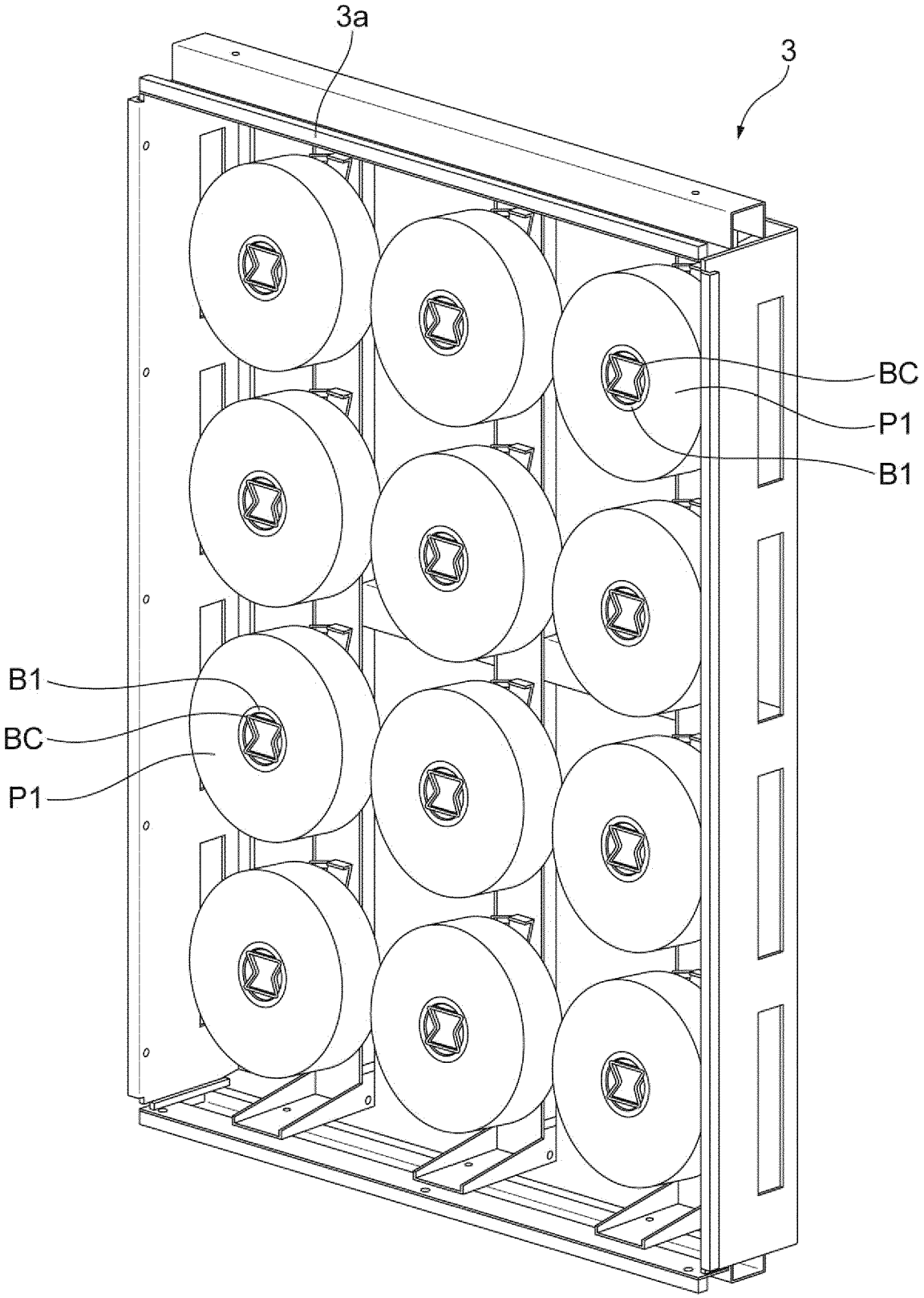

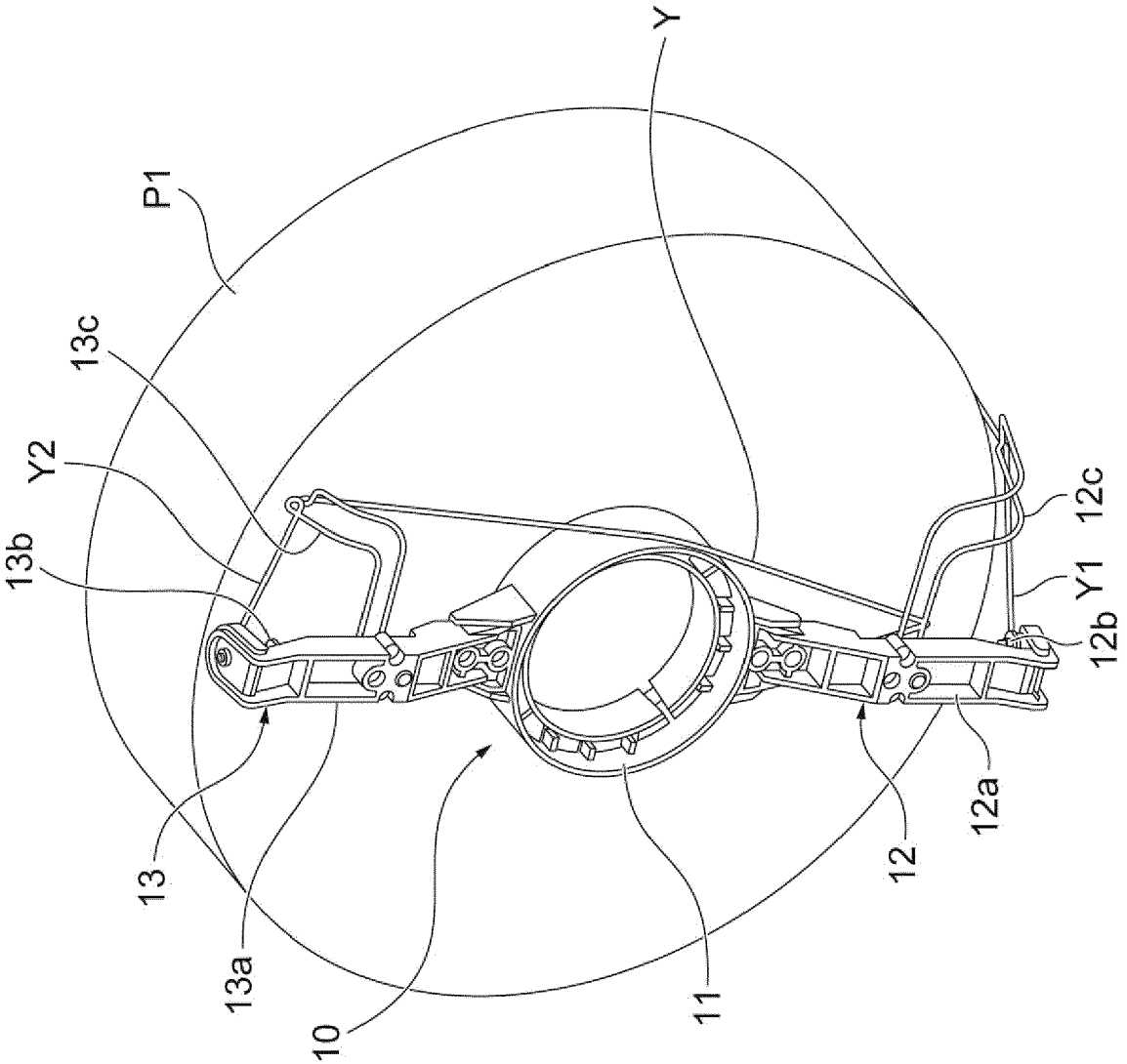

Fig.3

Fig.4

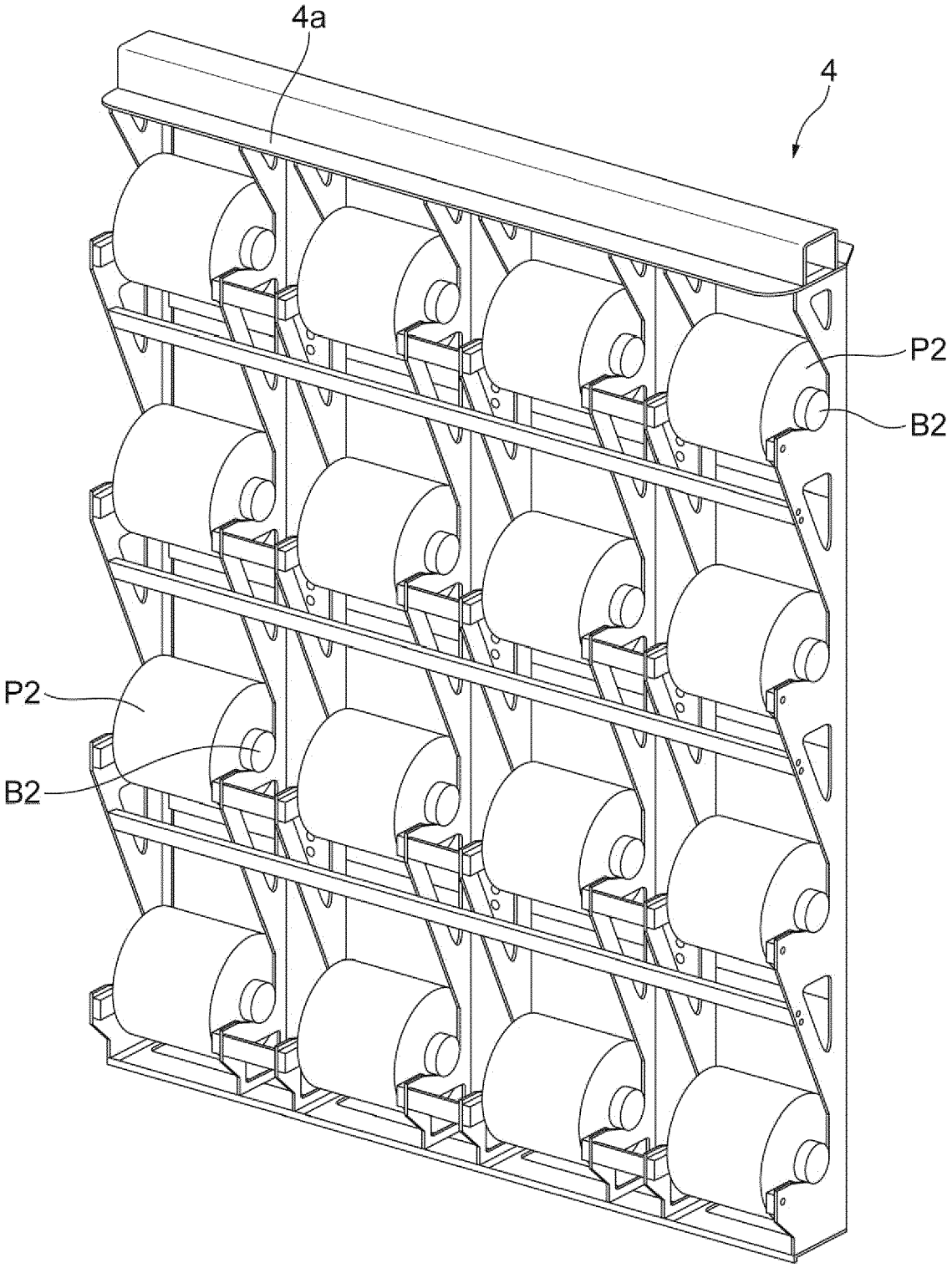

Fig.5

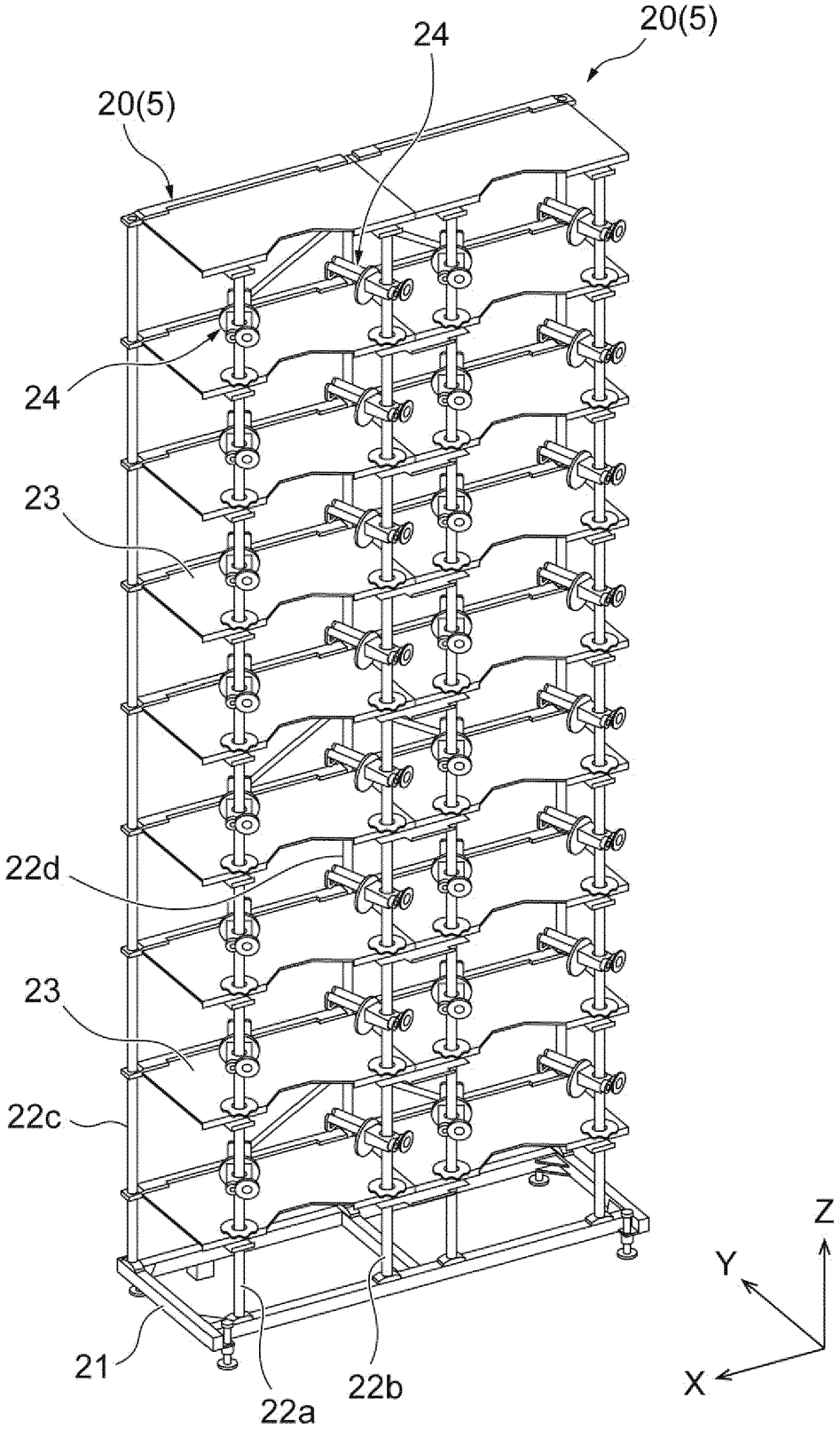

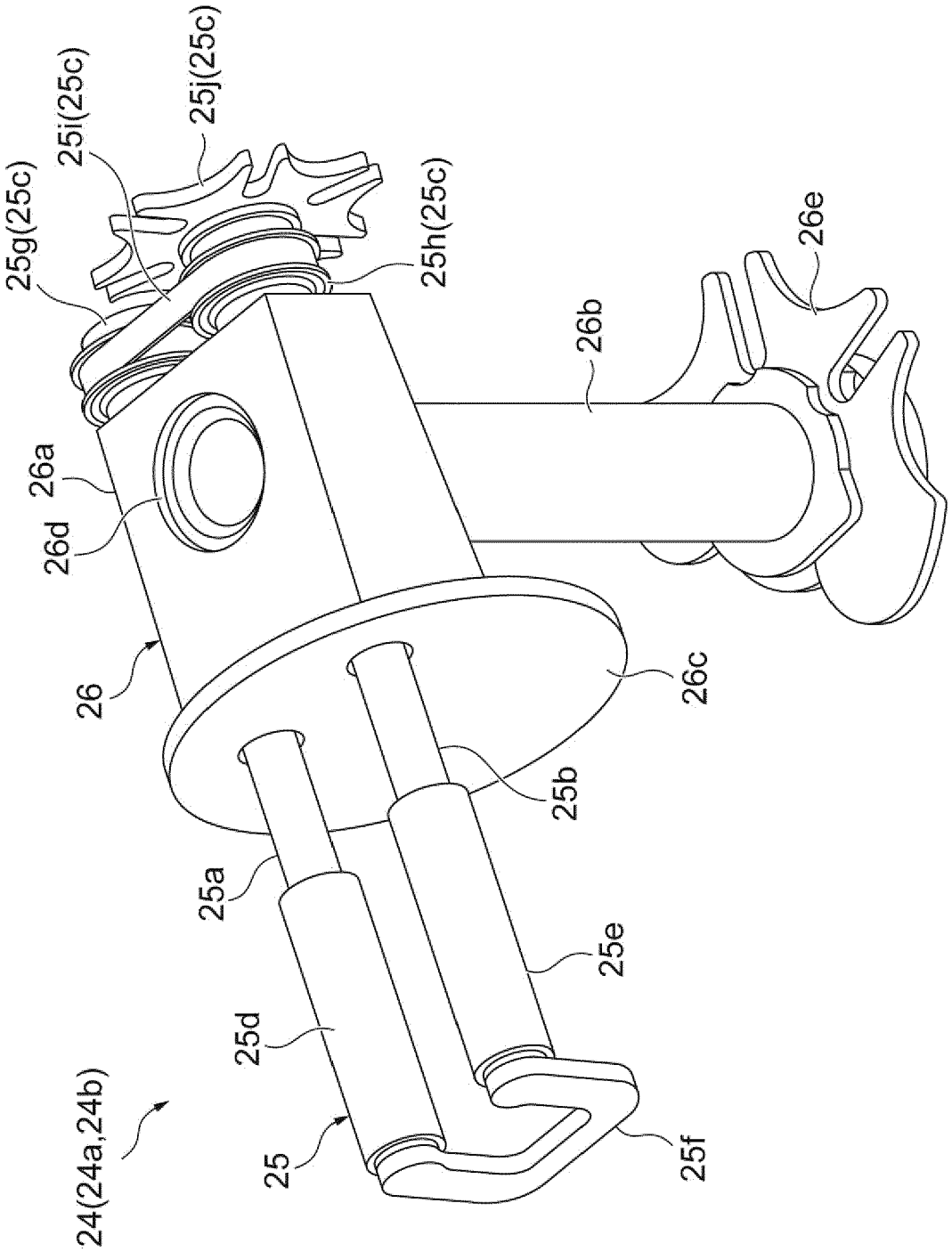
25g(25c)
25i(25c)
25j(25c)
25h(25c)
26e
26b
26a
26d
26
26c
25b
25a
25e
25d
24(24a,24b)
25
25f

Fig.6

Fig.7

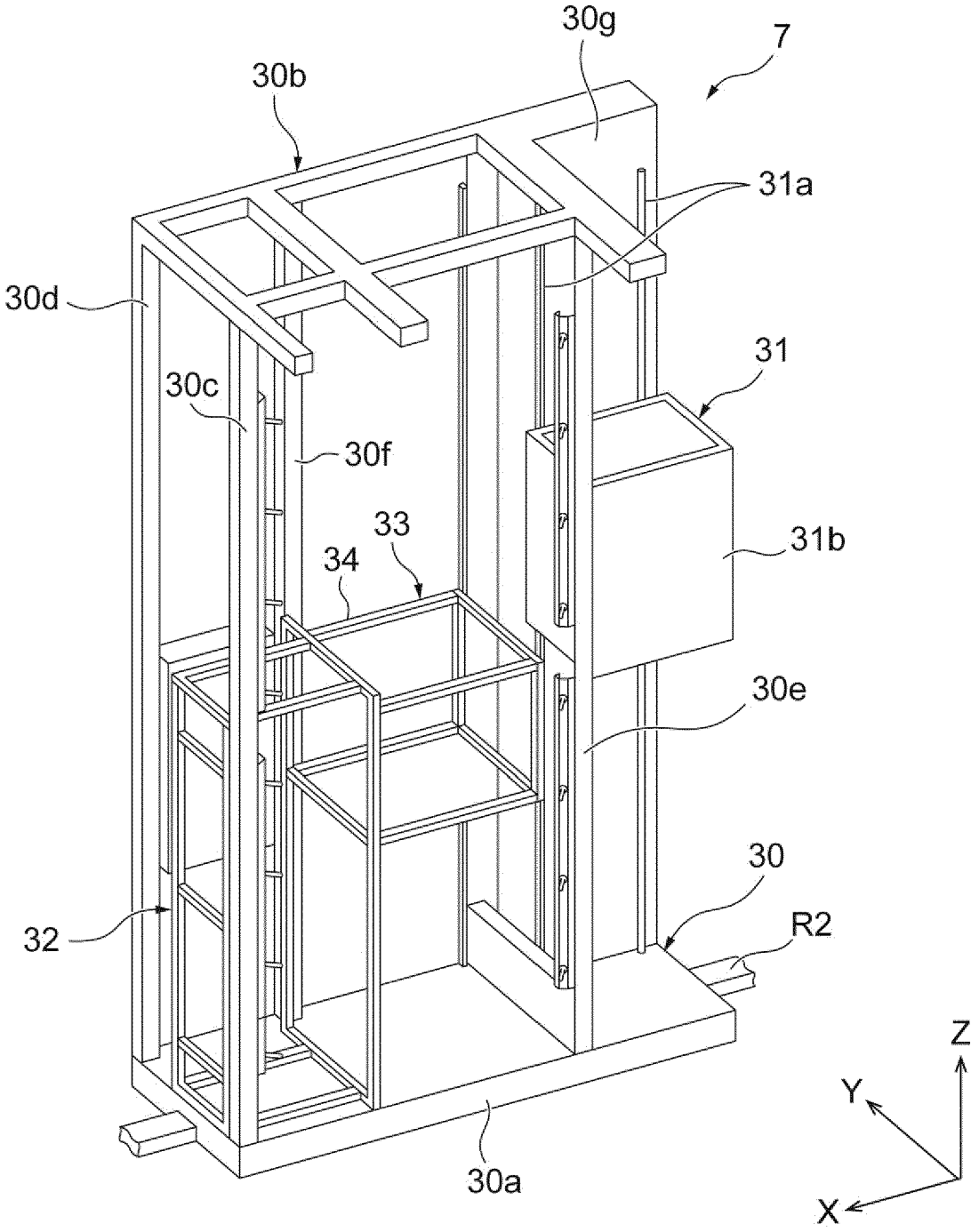

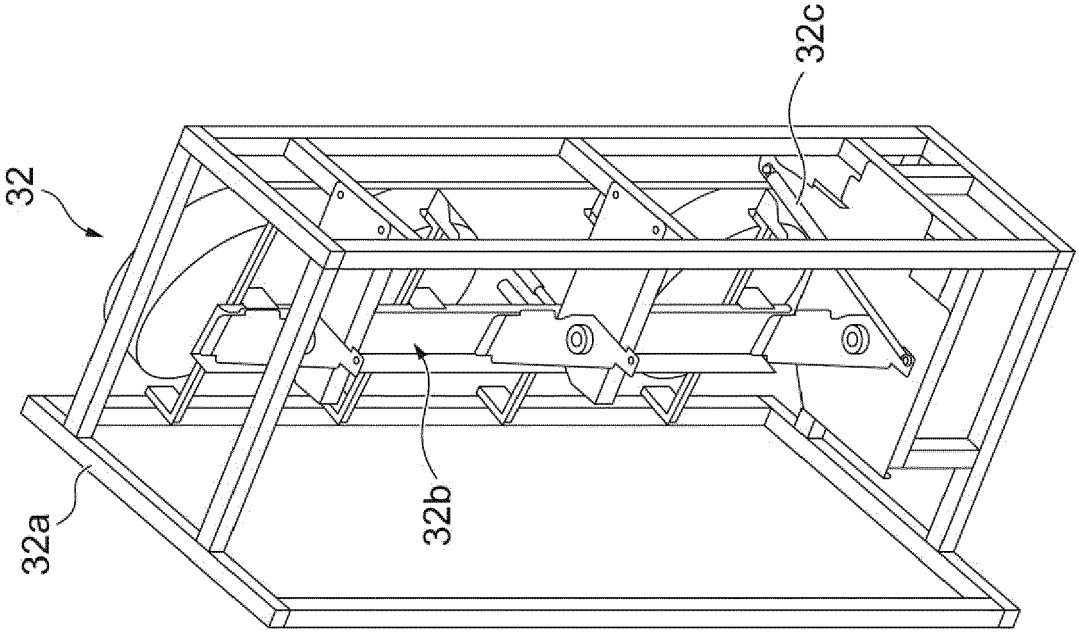

Fig.8B

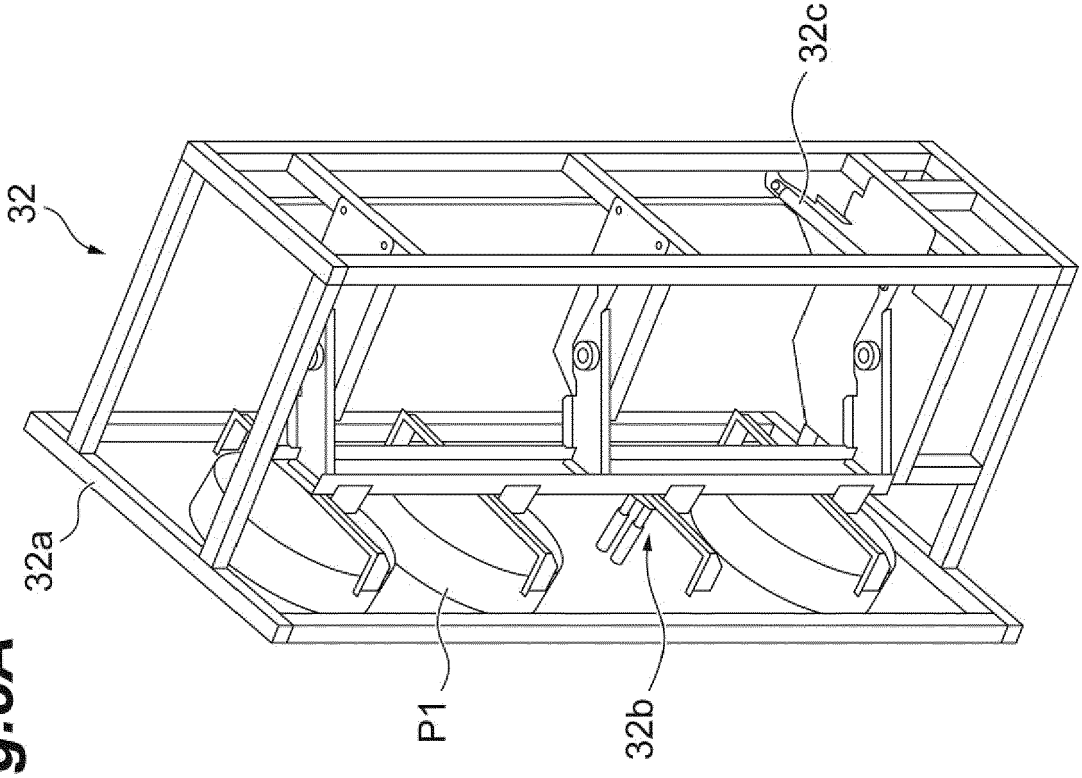

Fig.8A

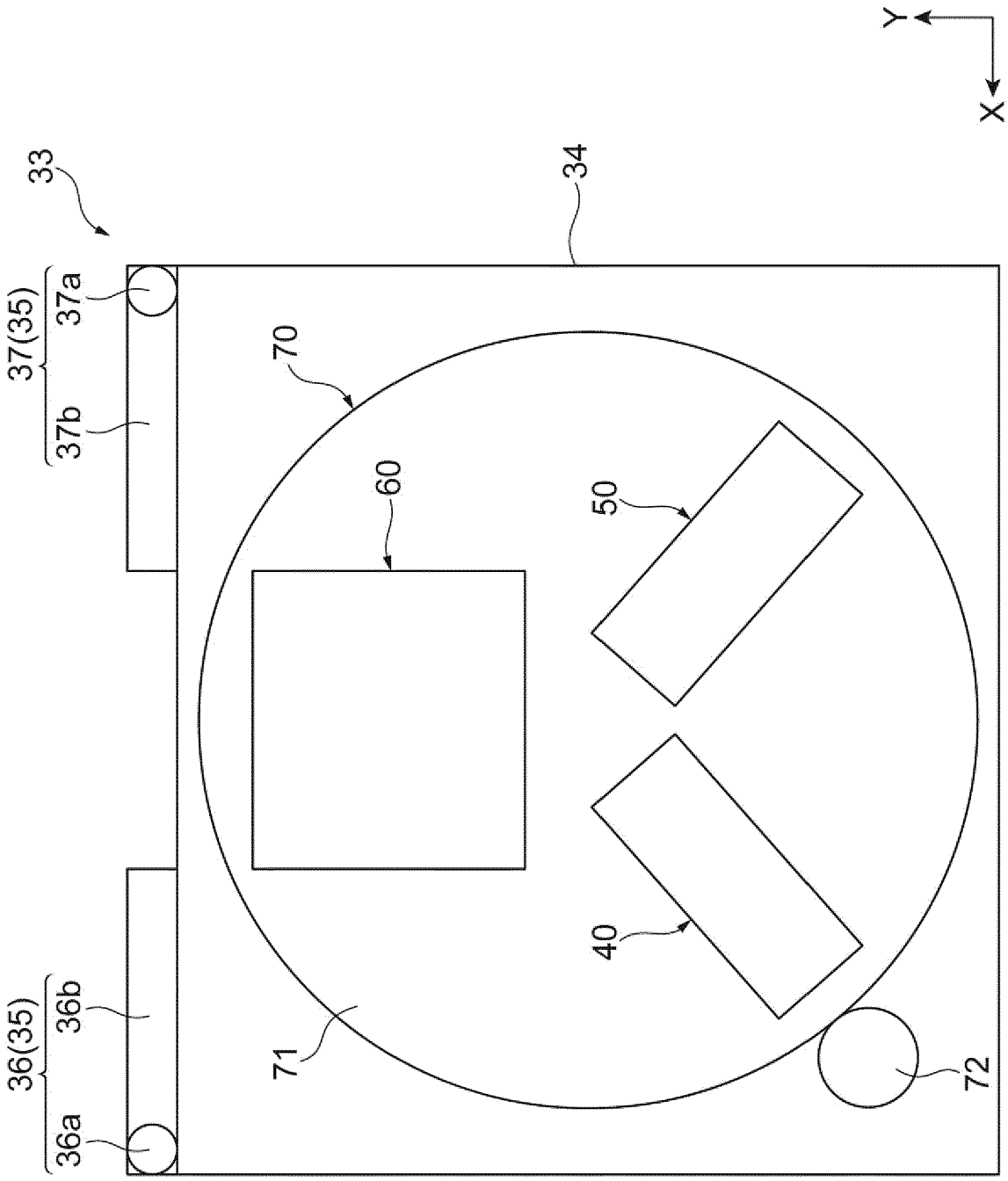

Fig.9

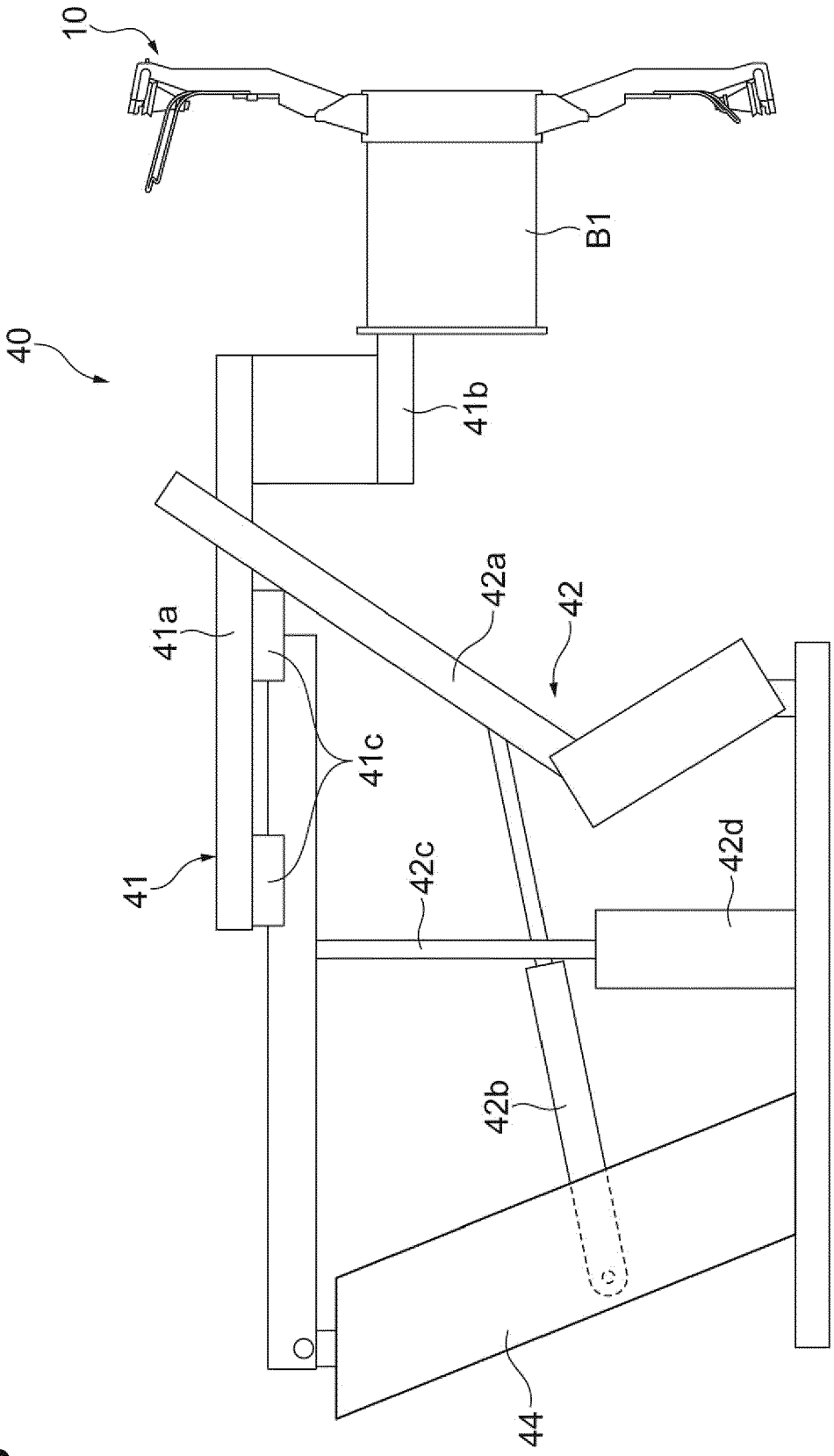

Fig.10

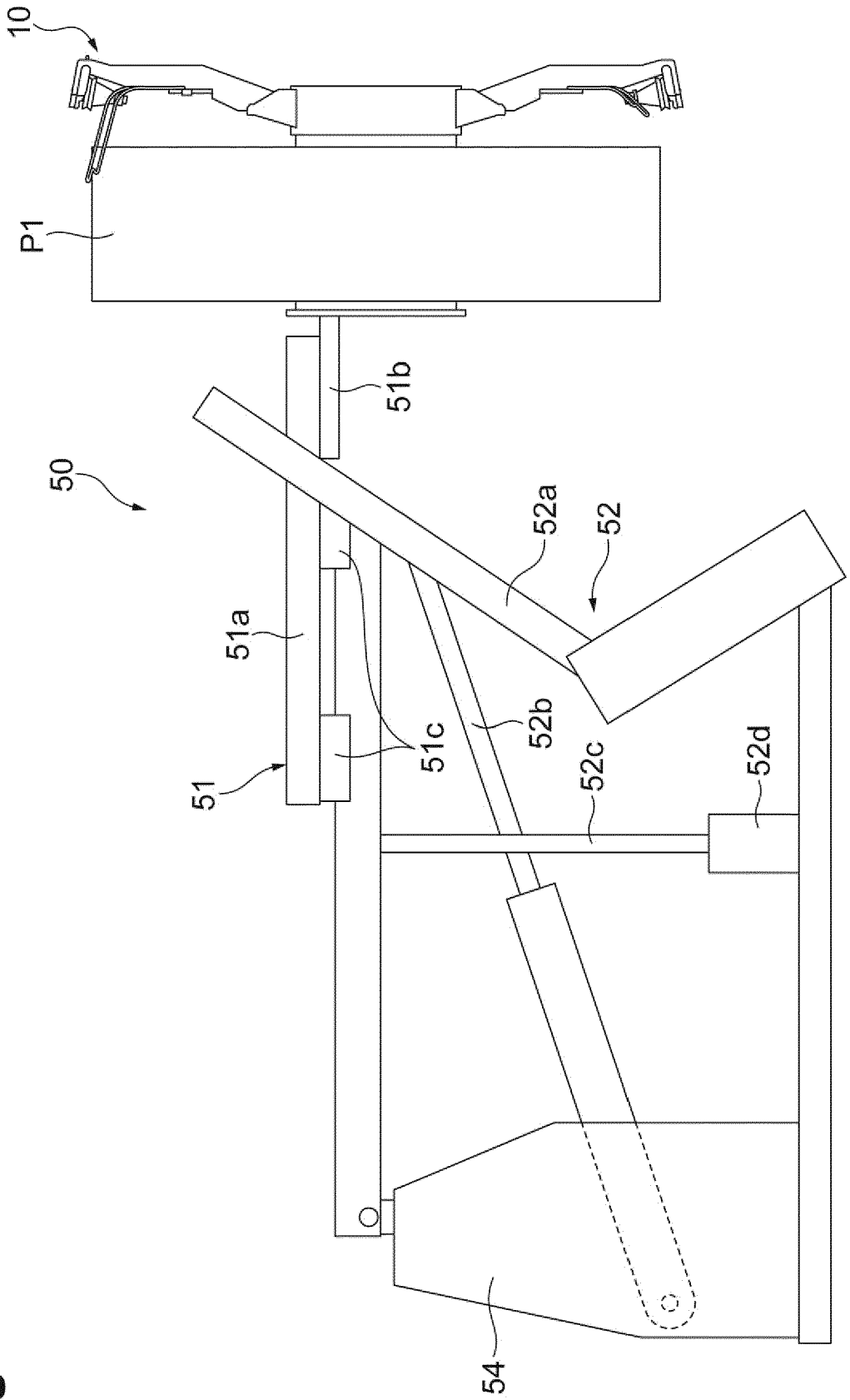

Fig.11

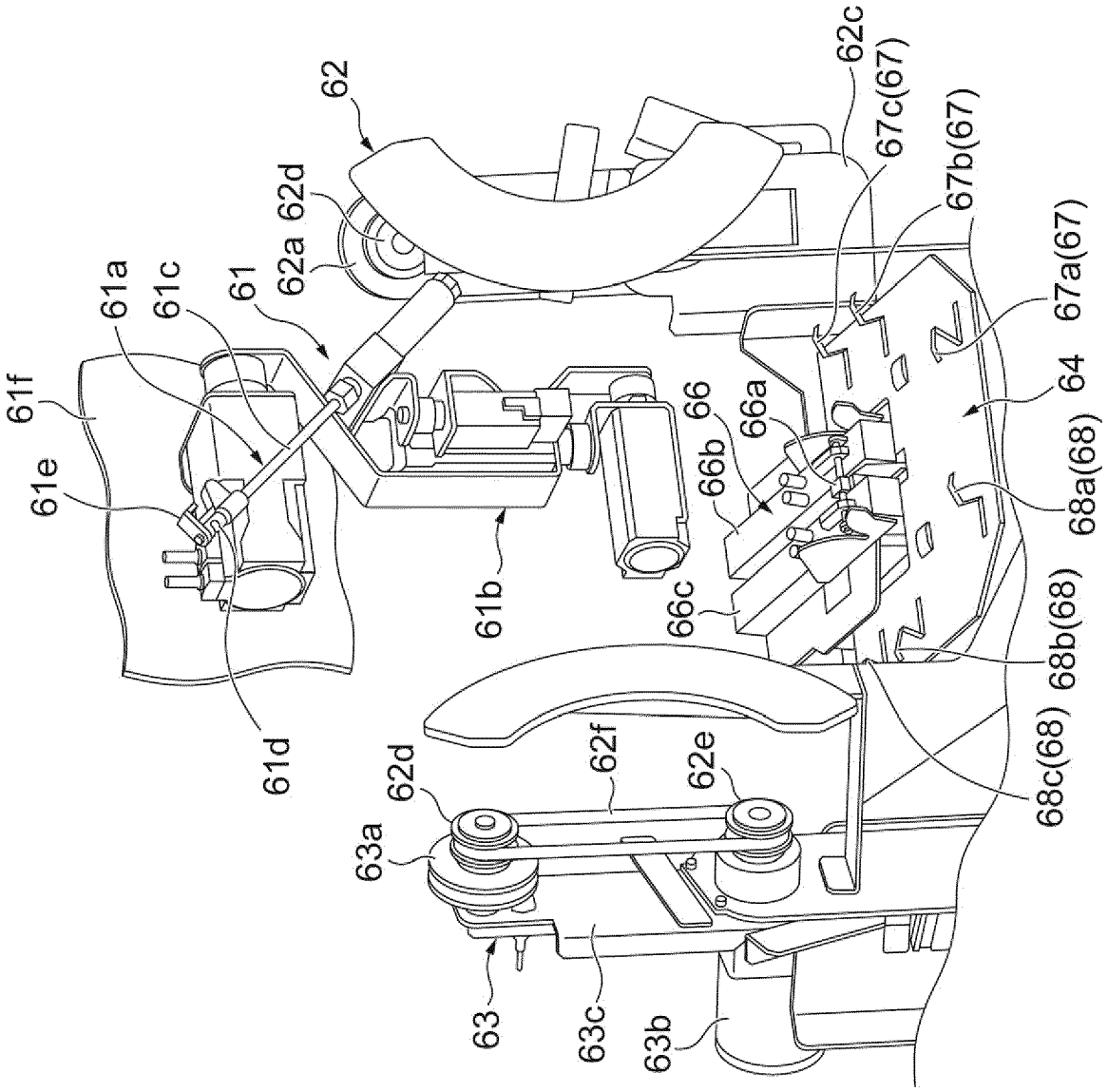
62
62d
62a
61
61a
61c
61f
61e
61d
61b
62c
67c(67)
67b(67)
67a(67)
64
66
66a
66b
66c
68a(68)
68b(68)
68c(68)
62d
63a
62f
62e
63
63c
63b

Fig.12

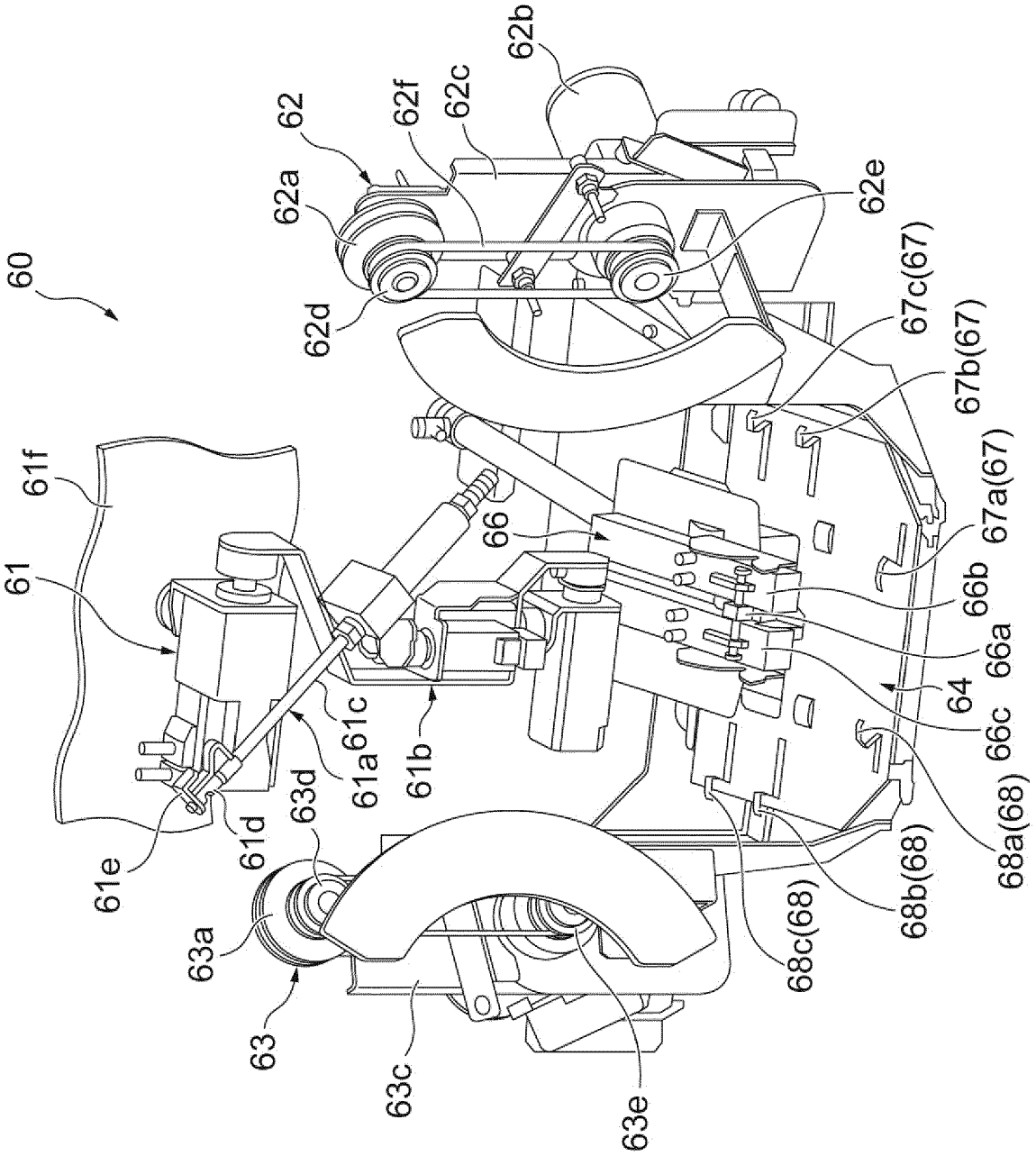
60
61
61f
61e
61d
61a
61c
61b
63d
63a
63
63c
63e
62
62a
62d
62f
62c
62b
62e
66
67c(67)
67b(67)
67a(67)
66b
66a
64
66c
68a(68)
68b(68)
68c(68)

Fig.13

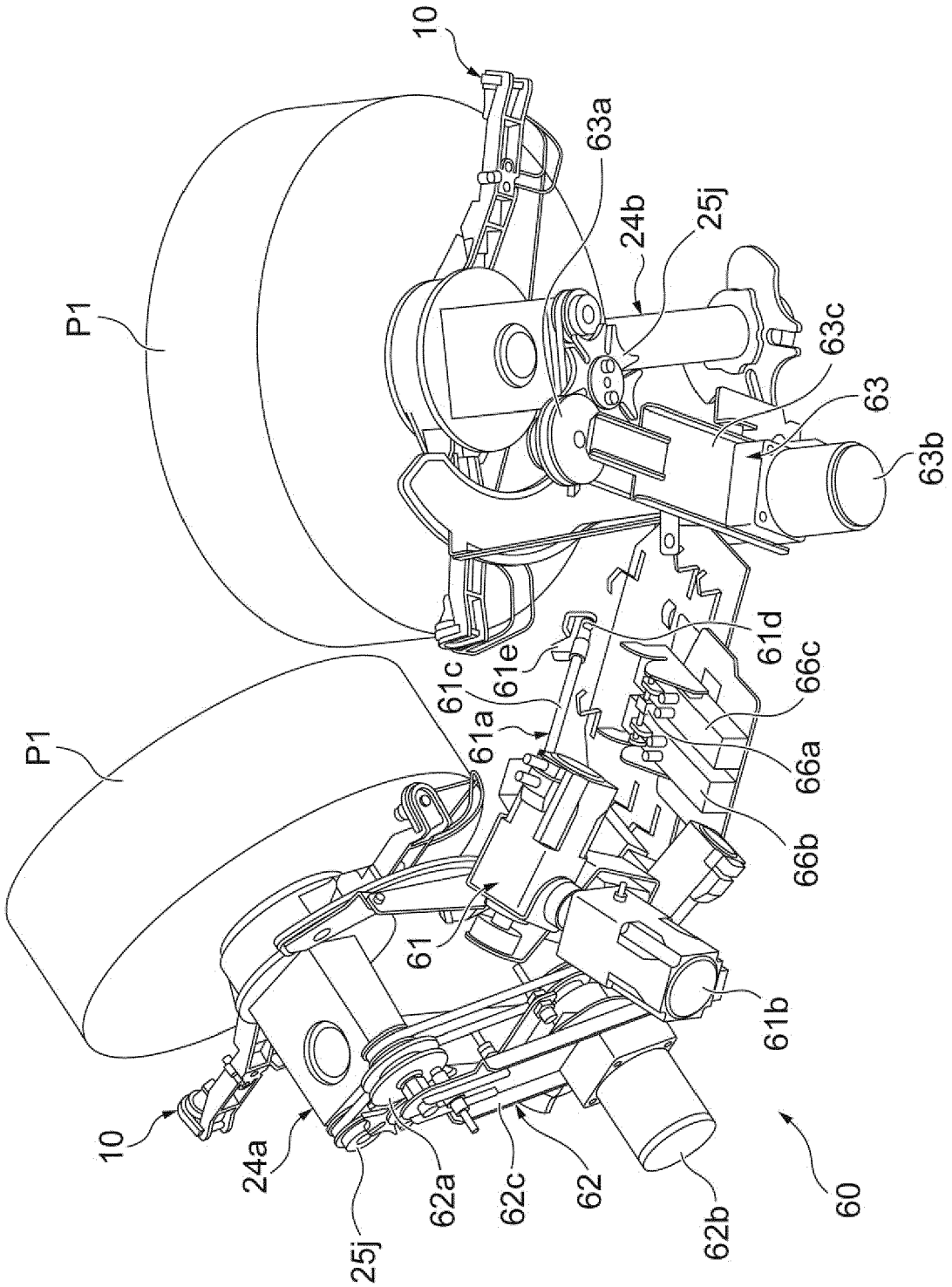
10
P1
63a
24b
25j
63c
63
63b
61d
61e
61c
61a
66c
66a
66b
61
61b
P1
10
24a
25j
62a
62c
62
62b
60

Fig.14

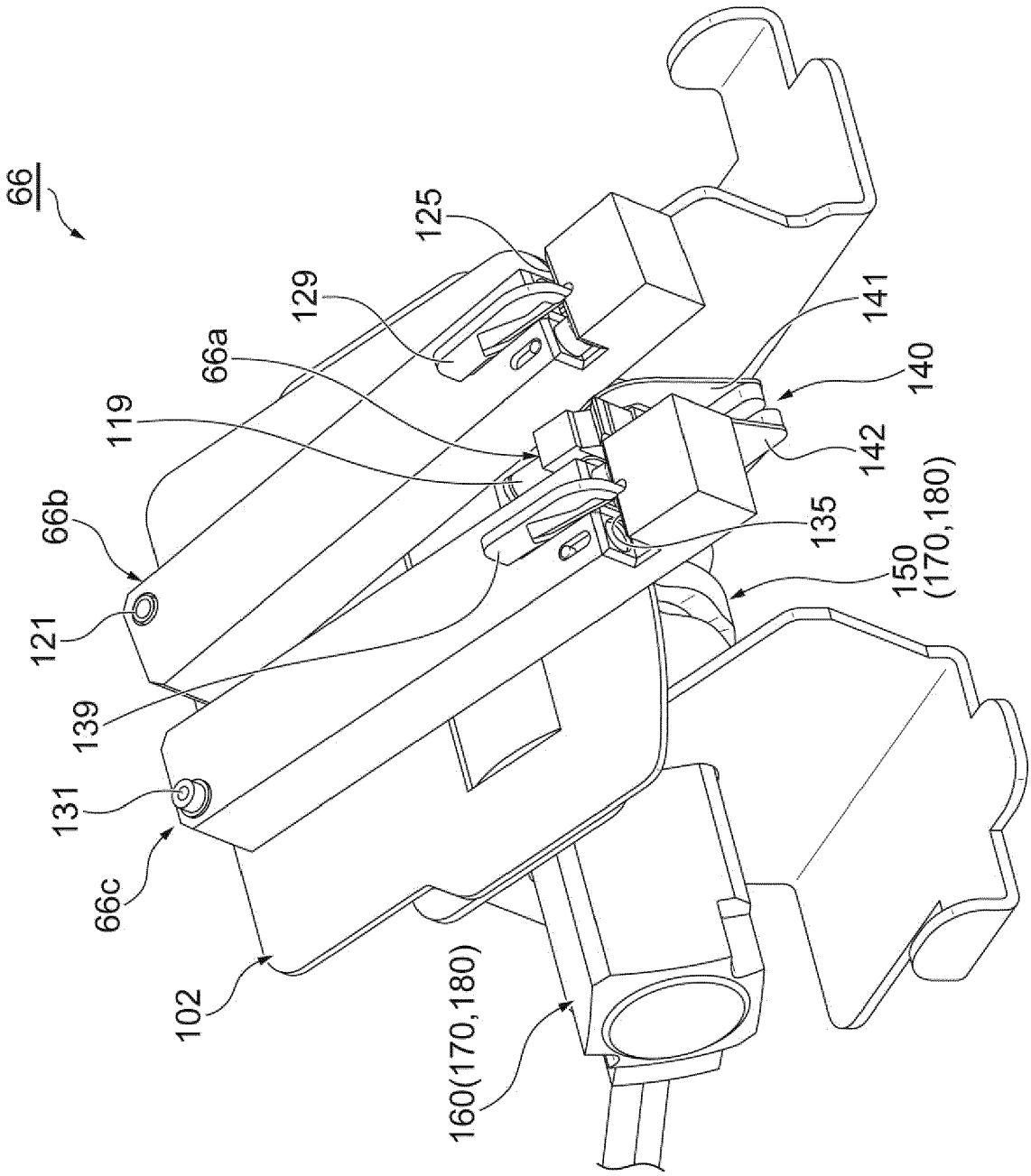
66
125
129
66a
119
66b
121
139
131
66c
102
160(170,180)
141
140
142
135
150
(170,180)

Fig.15

Fig.16

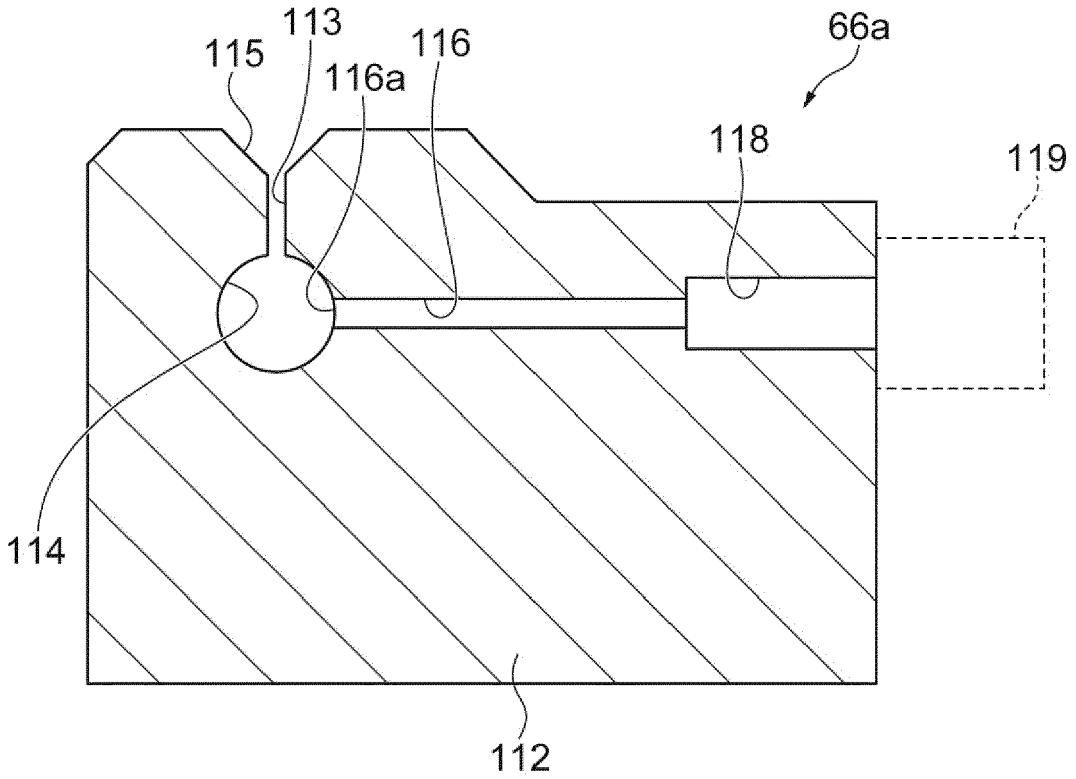

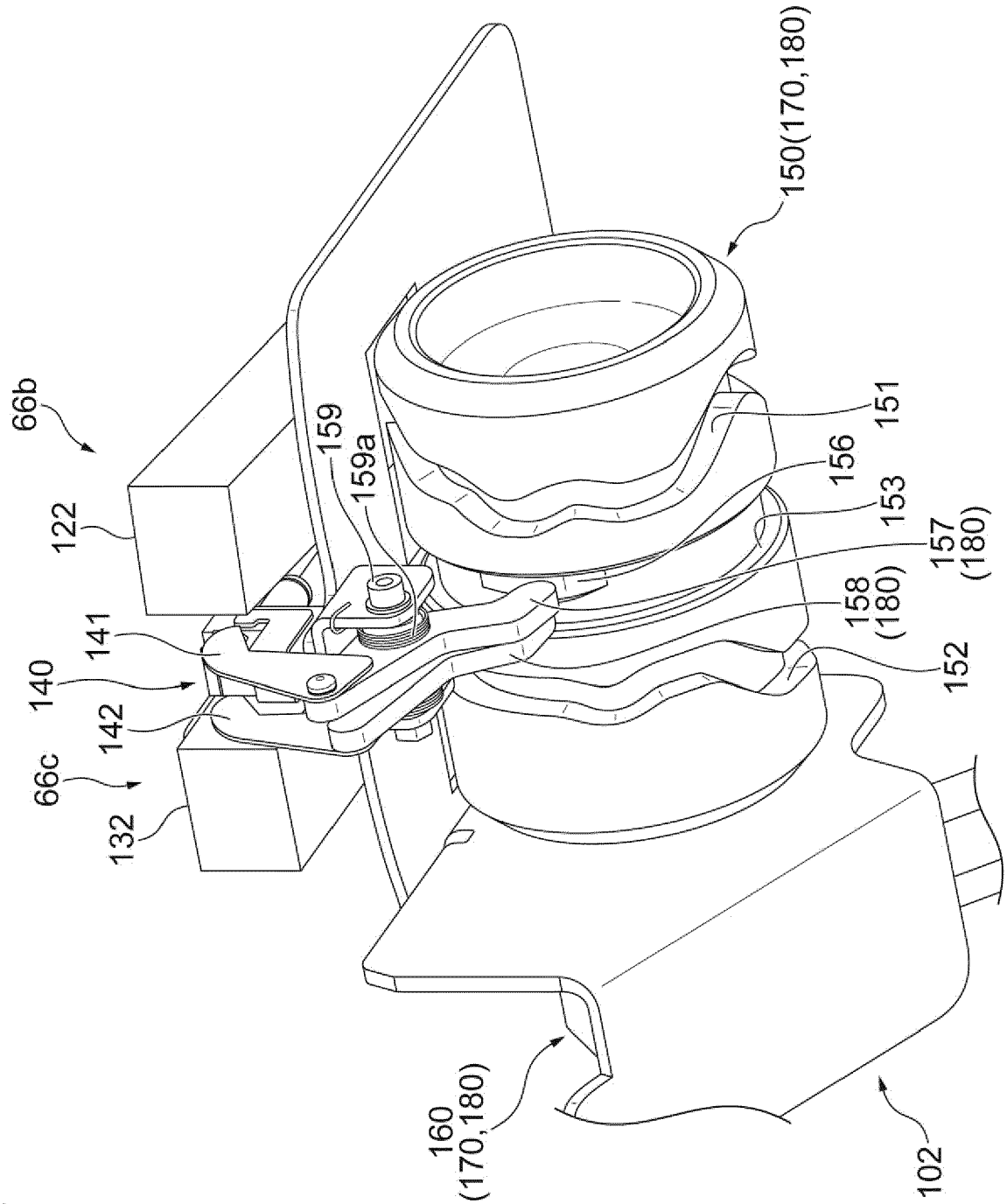
66b
122
141
140
142
66c
132
159
159a
150(170,180)
151
156
153
157
(180)
158
(180)
152
160
(170,180)
102

Fig.17

Fig.18A

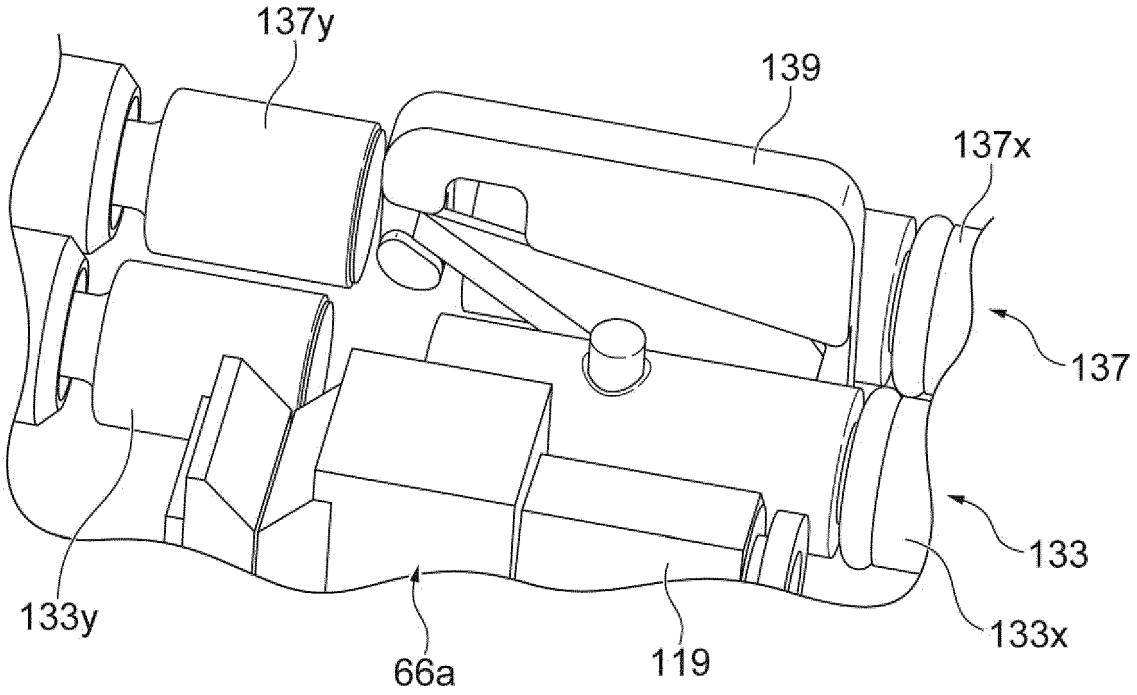

Fig.18B

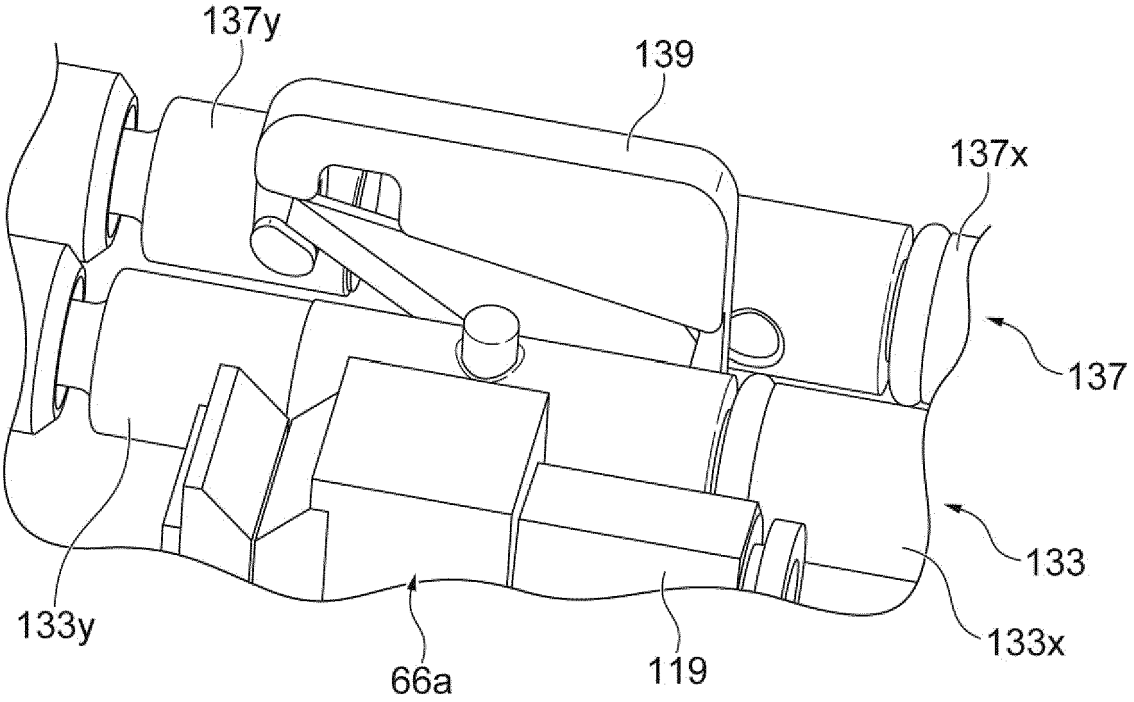

Fig.19

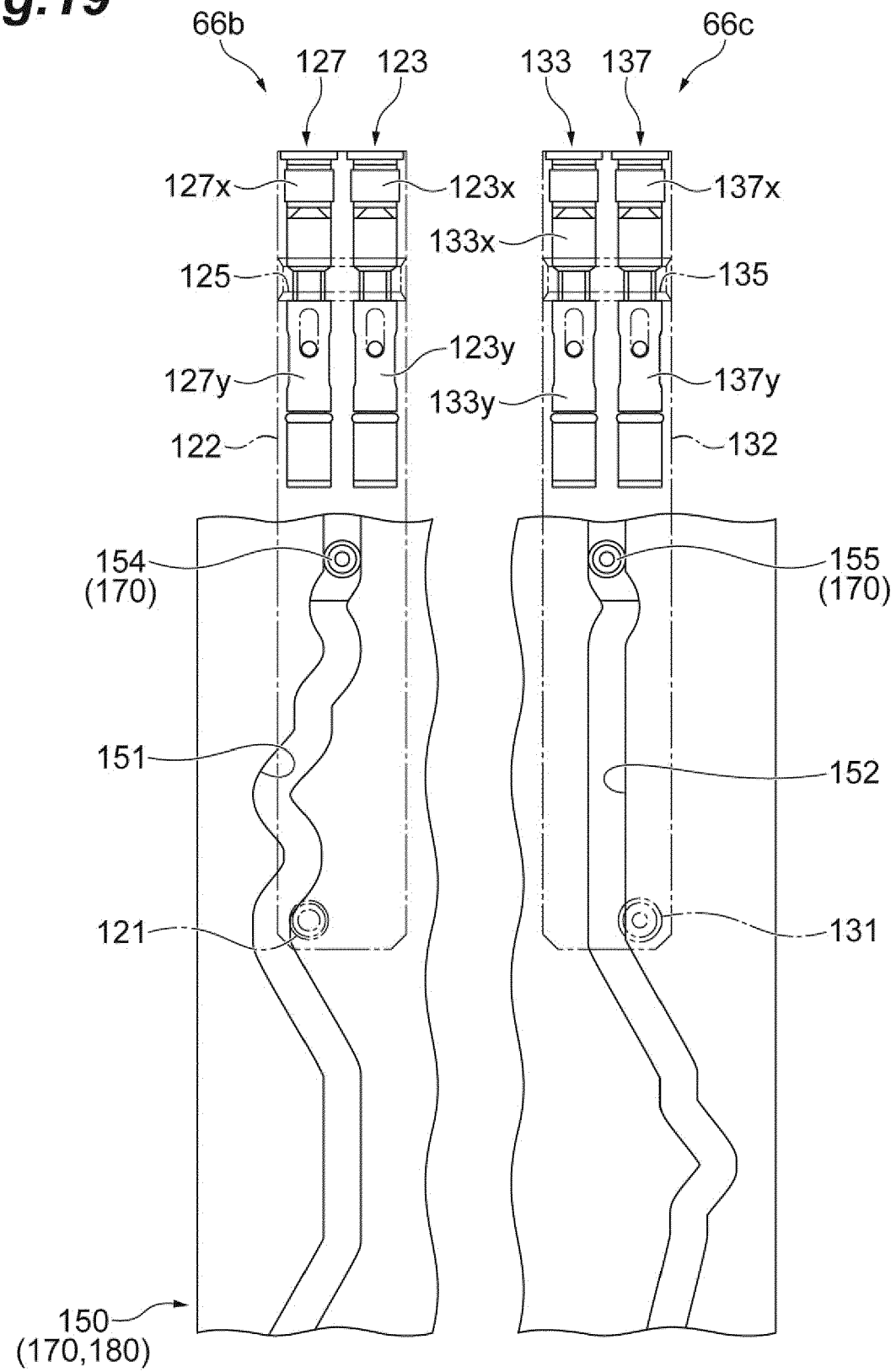
66b
66c
127
123
133
137
127x
123x
137x
133x
125
135
123y
127y
137y
133y
122
132
154
(170)
155
(170)
151
152
121
131
150
(170,180)

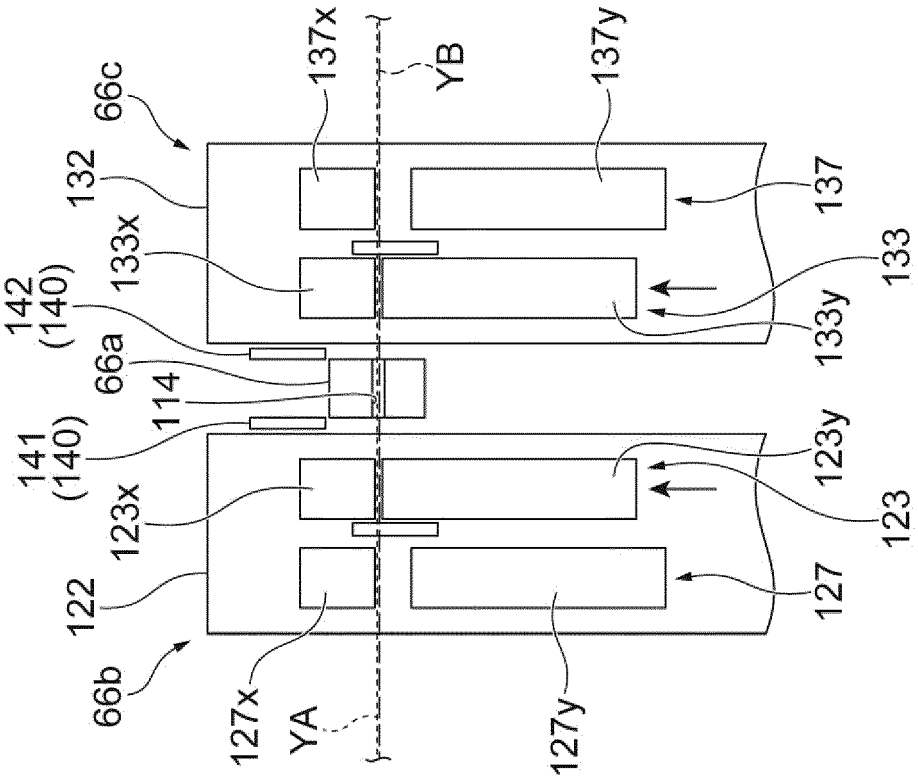

Fig.20B

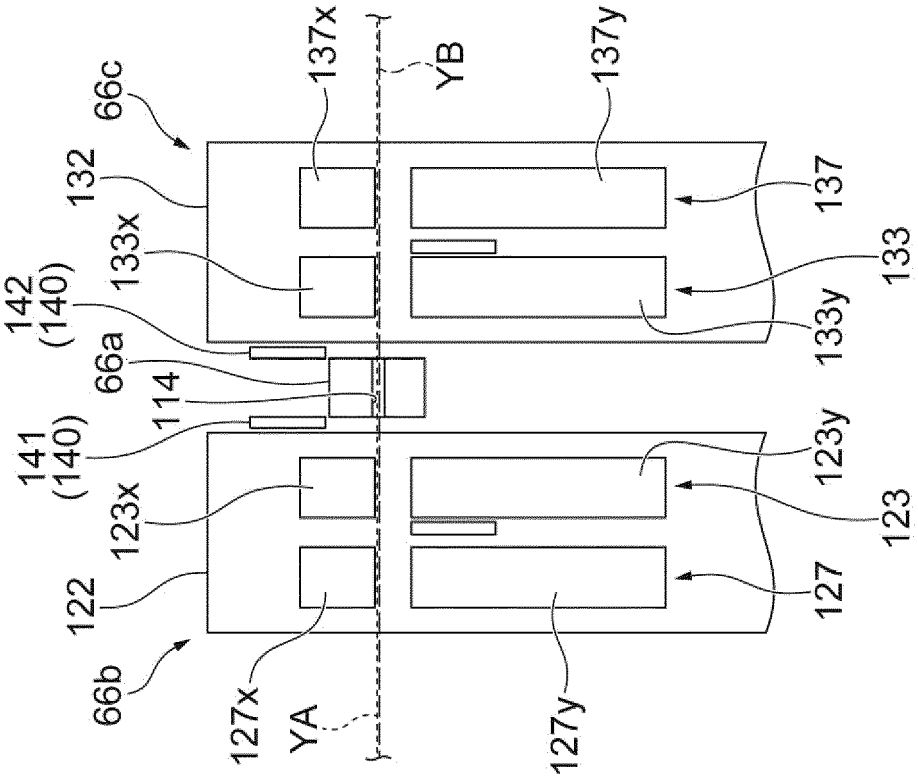

Fig.20A

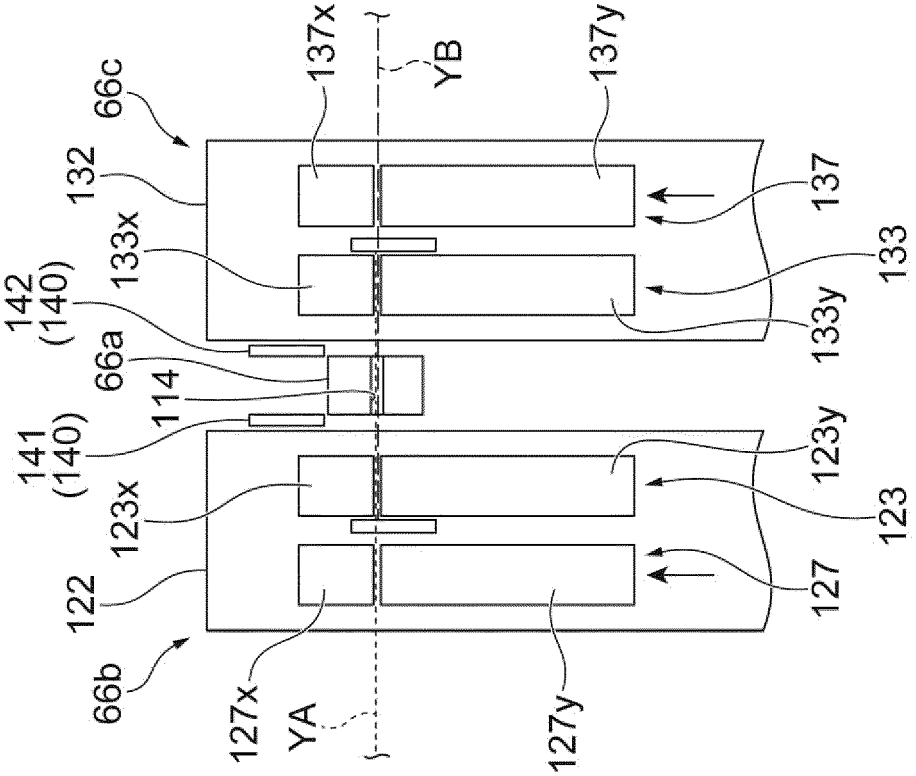

Fig.21B

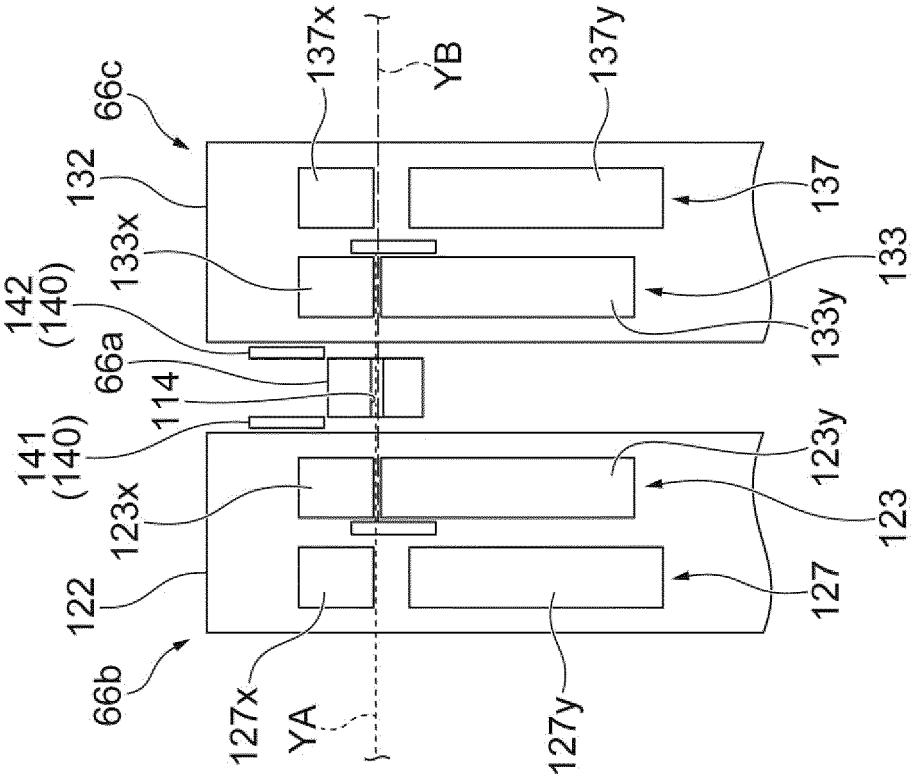

Fig.21A

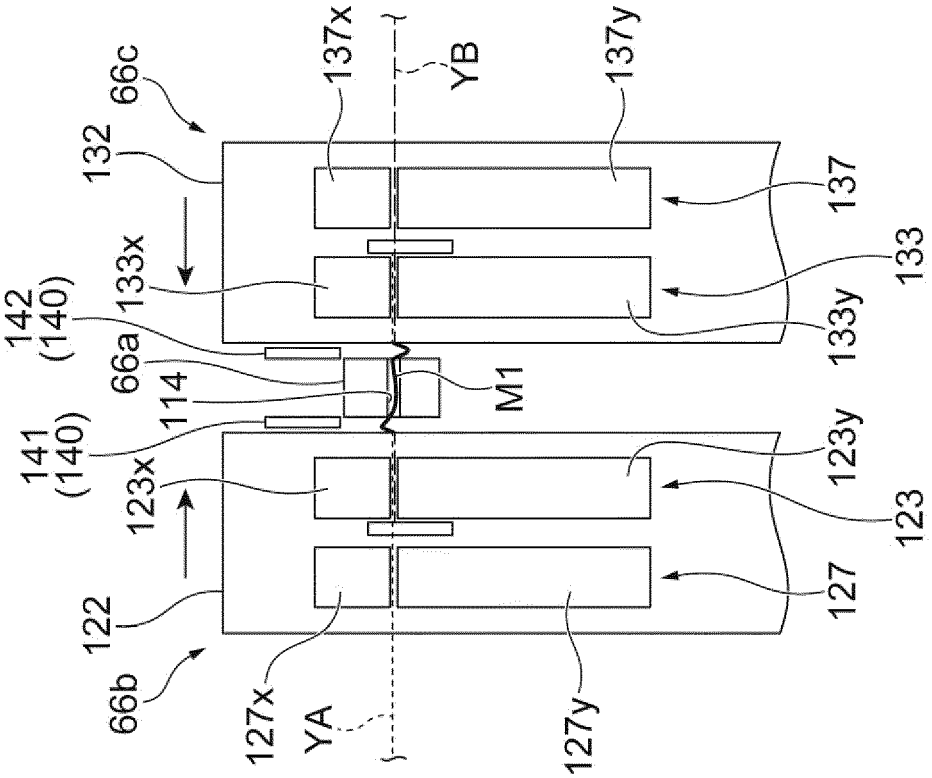

Fig.22B

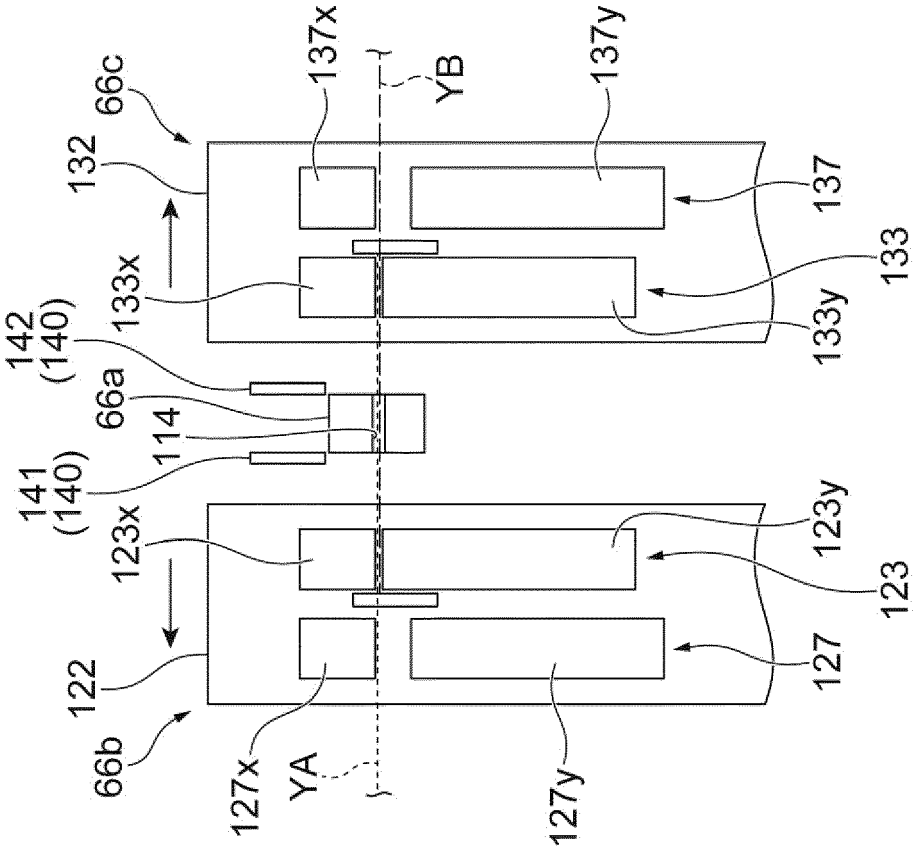

Fig.22A

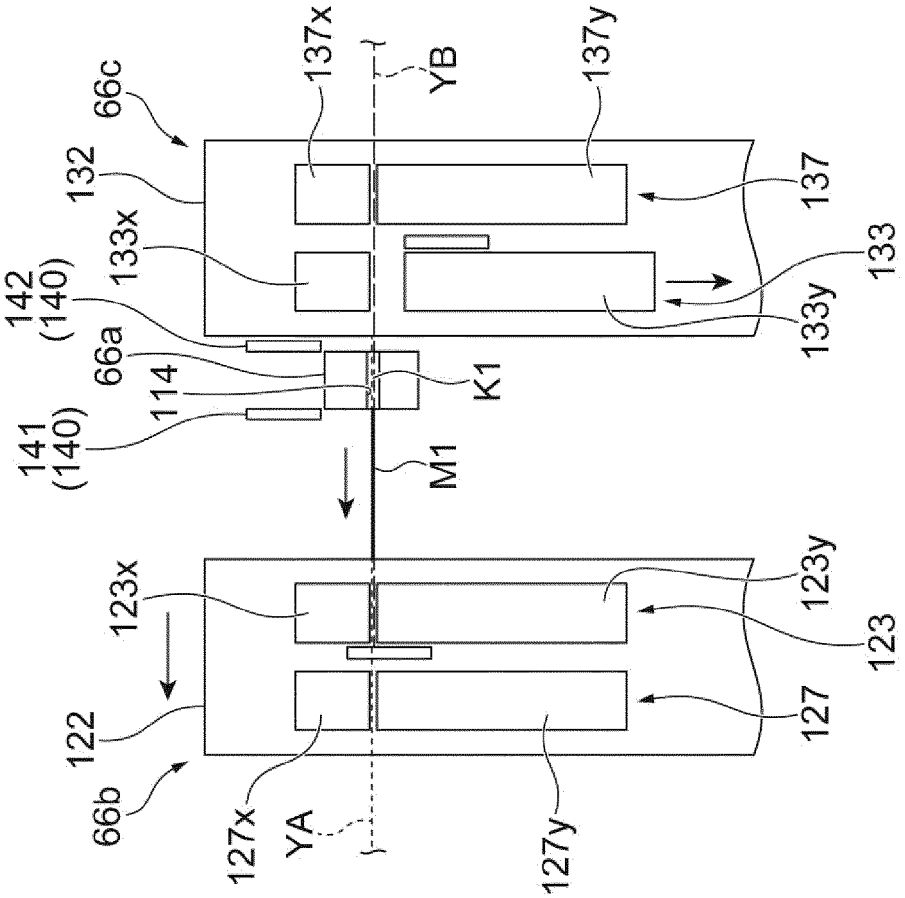

Fig.23B

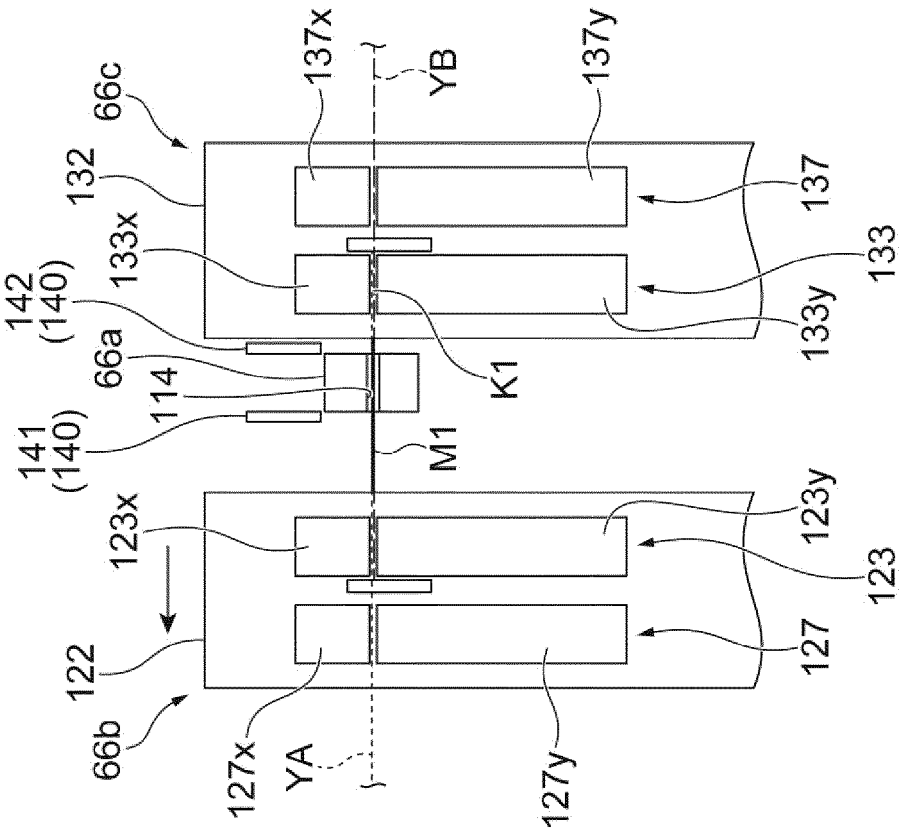

Fig.23A

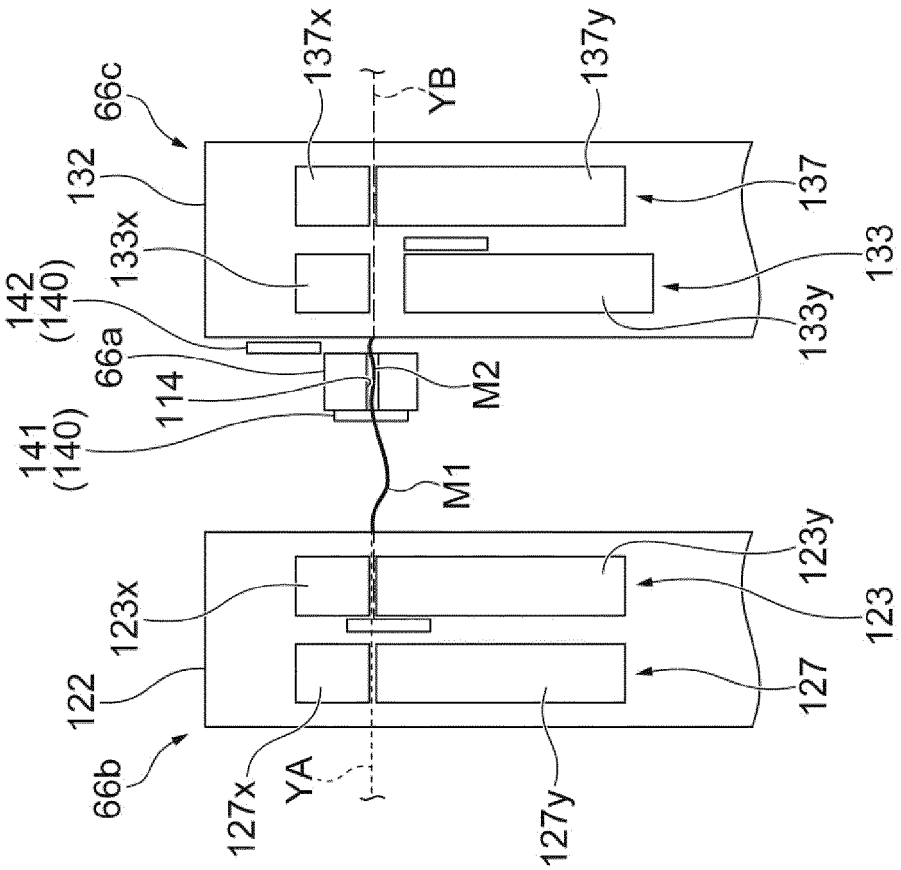

Fig.24B

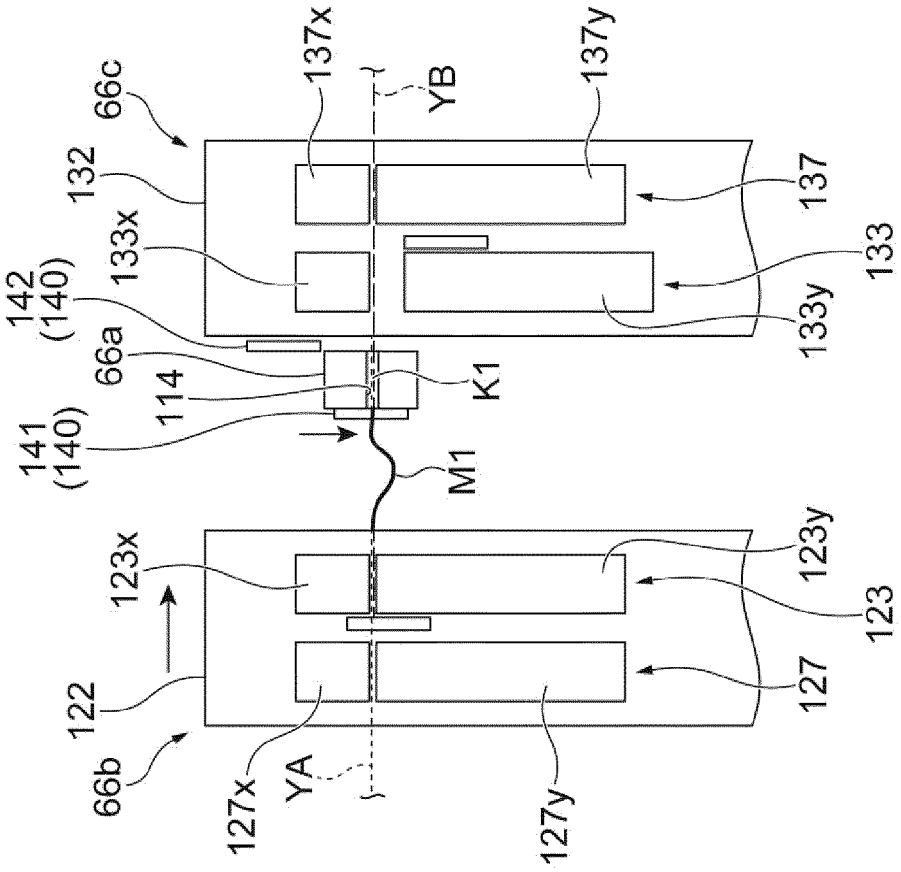

Fig.24A

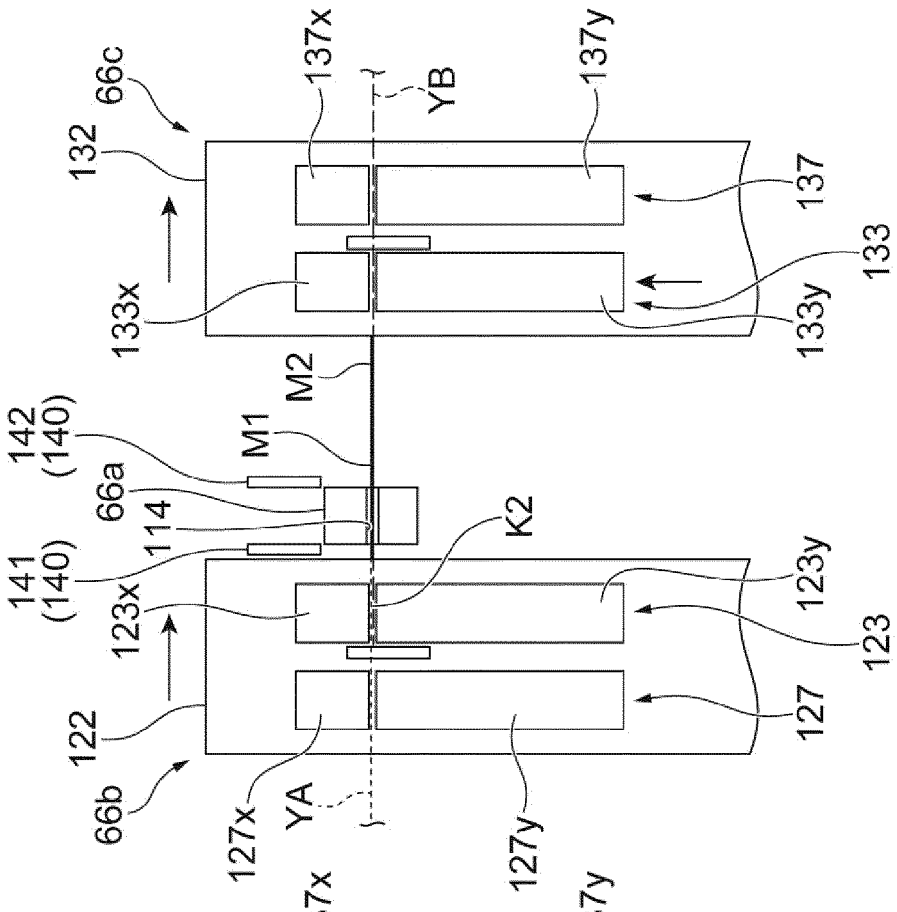

Fig.25B

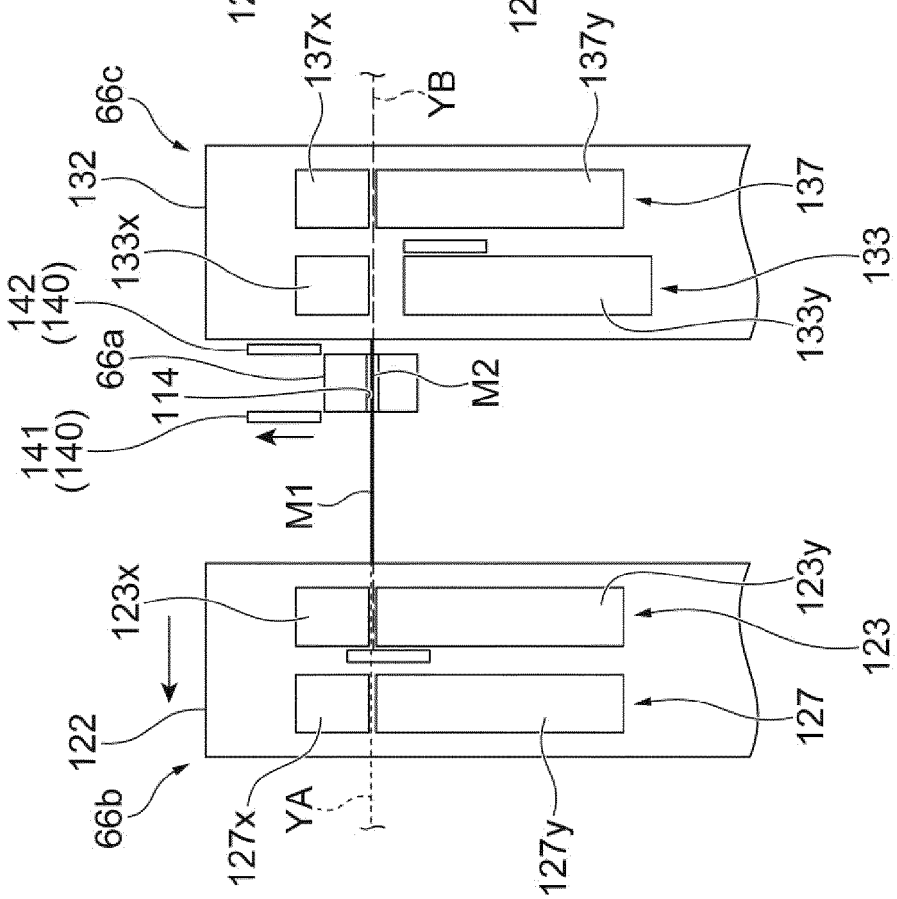

Fig.25A

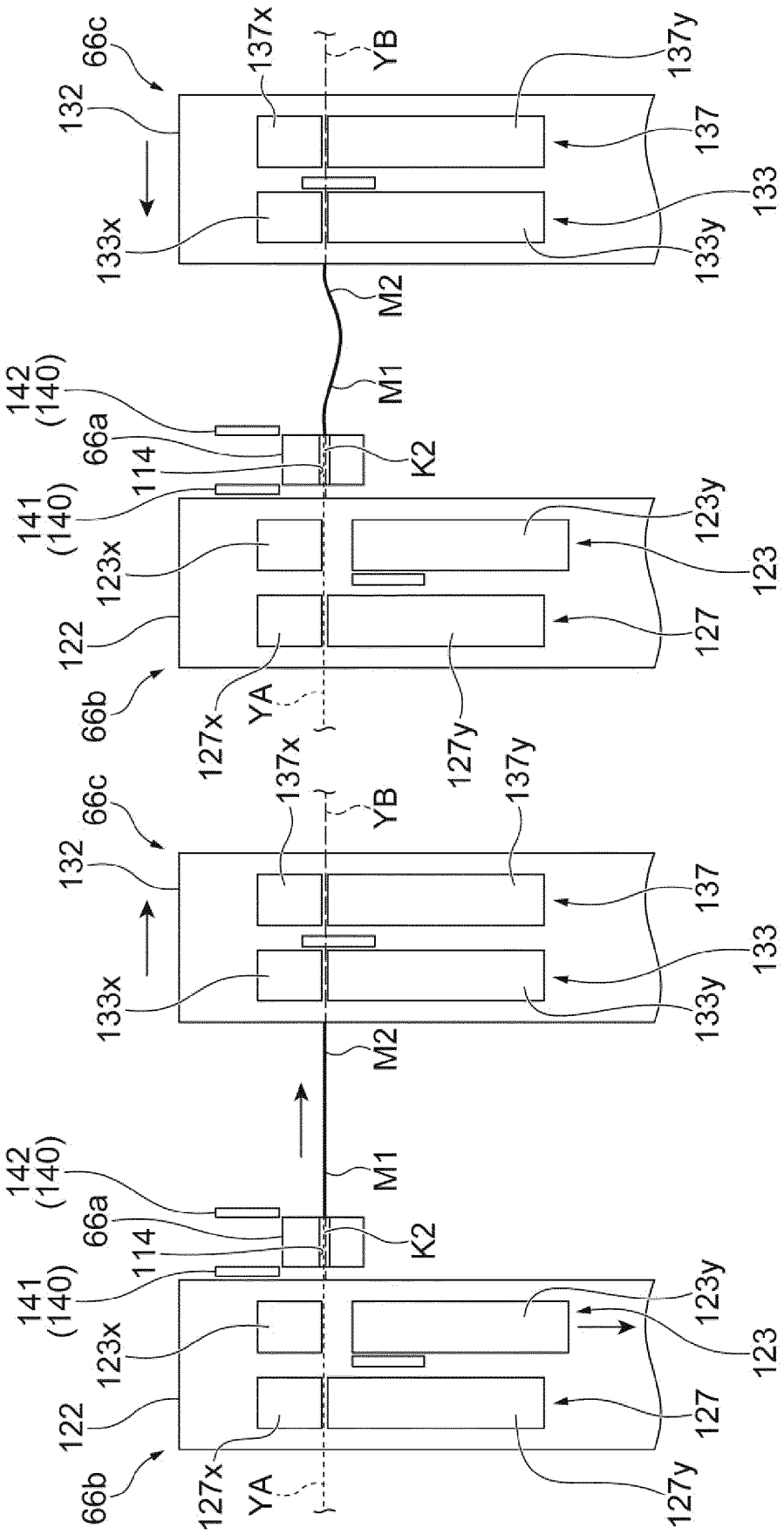

Fig.26B

Fig.26A

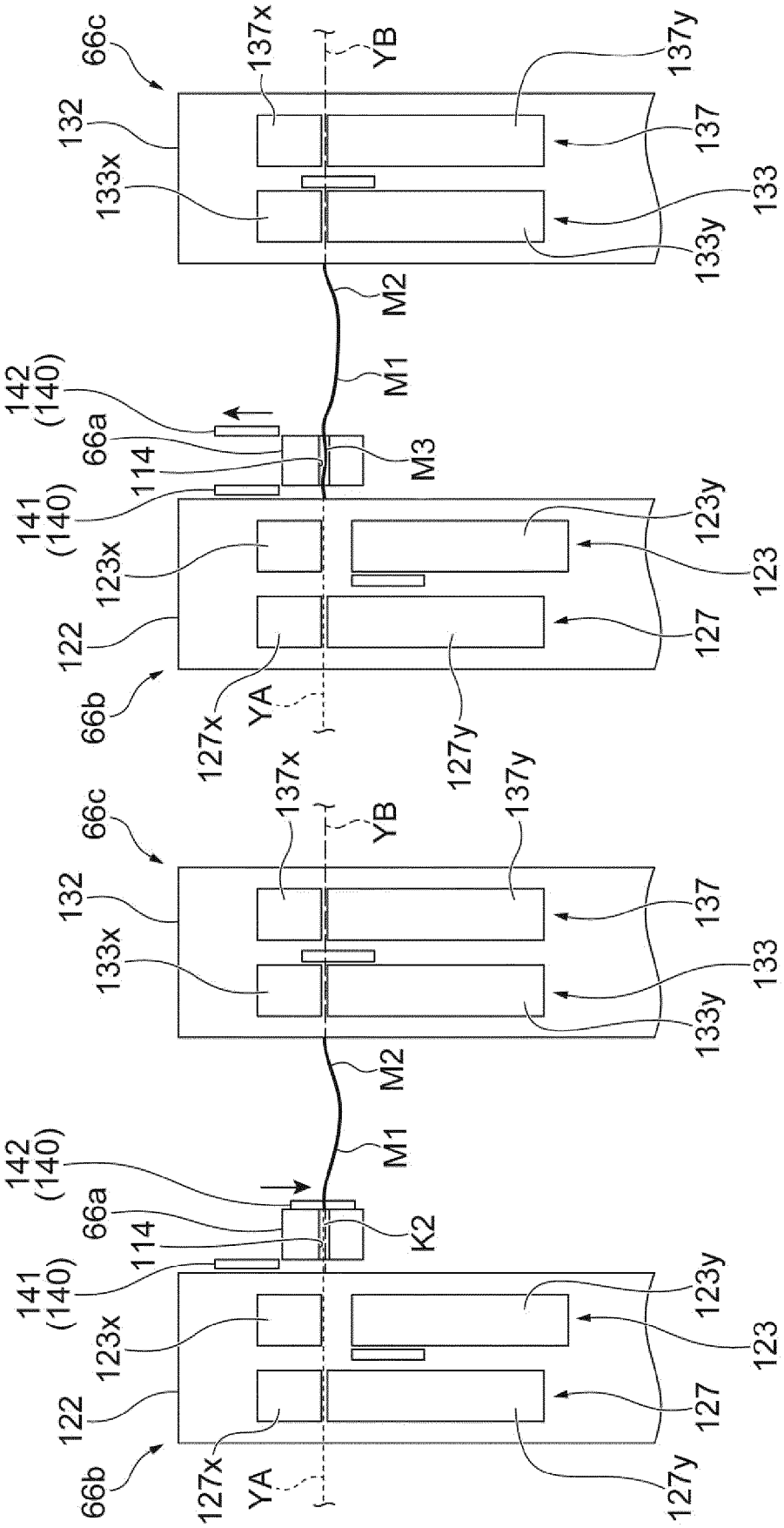

Fig.27B

Fig.27A

Fig.28

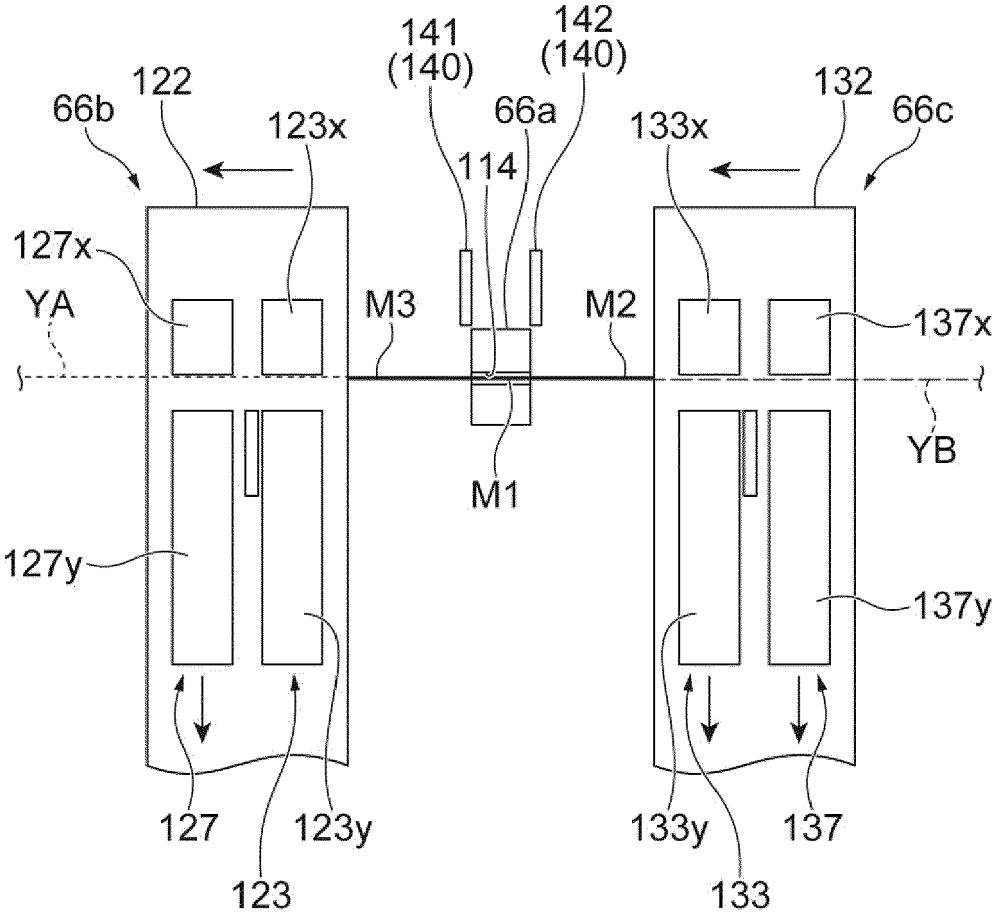
141
(140)
142
(140)
122
66b
123x
66a
133x
132
66c
114
127x
YA
M3
M2
137x
YB
M1
127y
137y
127
123y
133y
137
123
133

Europäisches Patentamt
European Patent Office
Office européen des brevets

EUROPEAN SEARCH REPORT

Application Number
EP 20 18 8117

DOCUMENTS CONSIDERED TO BE RELEVANT

Category	Citation of document with indication, where appropriate, of relevant passages	Relevant to claim	CLASSIFICATION OF THE APPLICATION (IPC)
A,D	JP H10 101267 A (MURATA MACHINERY LTD) 21 April 1998 (1998-04-21) * paragraphs [0002], [0004], [0005], [0011], [0012], [0018], [0028] - [0032]; figures *	1-7	INV. B65H69/06
A	US 4 468 919 A (NAKAJO JIRO [JP] ET AL) 4 September 1984 (1984-09-04) * column 5, lines 9-15 * * column 7, lines 7-14 * * column 8, lines 56-61; figures *	1-7	
A	JP 2000 143095 A (MURATA MACHINERY LTD) 23 May 2000 (2000-05-23) * paragraphs [0005], [0008], [0012], [0020]; figures *	1-7	
A	JP H01 308365 A (MURATA MACHINERY LTD) 13 December 1989 (1989-12-13) * figures *	1-7	

TECHNICAL FIELDS SEARCHED (IPC)

B65H

The present search report has been drawn up for all claims

Place of search	Date of completion of the search	Examiner
The Hague	30 November 2020	Lemmen, René

CATEGORY OF CITED DOCUMENTS

X : particularly relevant if taken alone
Y : particularly relevant if combined with another document of the same category
A : technological background
O : non-written disclosure
P : intermediate document

T : theory or principle underlying the invention
E : earlier patent document, but published on, or after the filing date
D : document cited in the application
L : document cited for other reasons
.....
& : member of the same patent family, corresponding document

1

EPO FORM 1503 03.82 (P04C01)

ANNEX TO THE EUROPEAN SEARCH REPORT ON EUROPEAN PATENT APPLICATION NO. EP 20 18 8117

This annex lists the patent family members relating to the patent documents cited in the above-mentioned European search report.
The members are as contained in the European Patent Office EDP file on
The European Patent Office is in no way liable for these particulars which are merely given for the purpose of information.

30-11-2020

Patent document cited in search report	Publication date	Patent family member(s)	Publication date
JP H10101267 A	21-04-1998	NONE	
US 4468919 A	04-09-1984	JP S629509 B2	28-02-1987
		JP S5939662 A	05-03-1984
		US 4468919 A	04-09-1984
JP 2000143095 A	23-05-2000	NONE	
JP H01308365 A	13-12-1989	NONE	

EPO FORM P0459

For more details about this annex : see Official Journal of the European Patent Office, No. 12/82

REFERENCES CITED IN THE DESCRIPTION

This list of references cited by the applicant is for the reader's convenience only. It does not form part of the European patent document. Even though great care has been taken in compiling the references, errors or omissions cannot be excluded and the EPO disclaims all liability in this regard.

Patent documents cited in the description

- JP H10101267 B **[0002]**