June 27, 1939. W. F. HELMOND 2,163,943

TYPEWRITING MACHINE

Filed Oct. 5, 1936

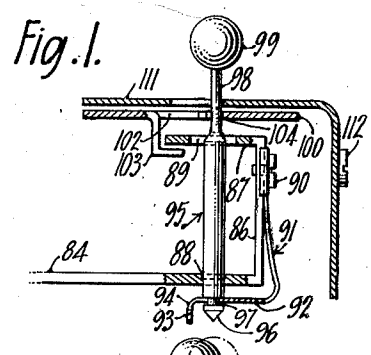

Fig. 1.

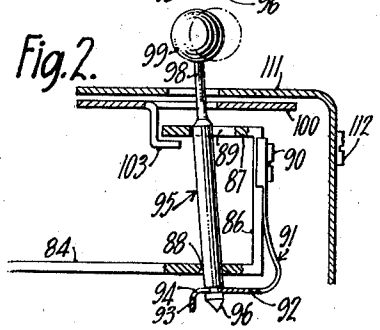

Fig. 2.

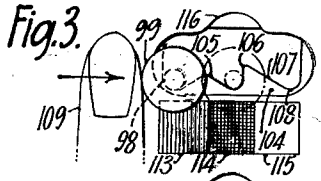

Fig. 3.

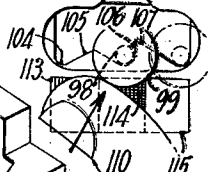

Fig. 4.

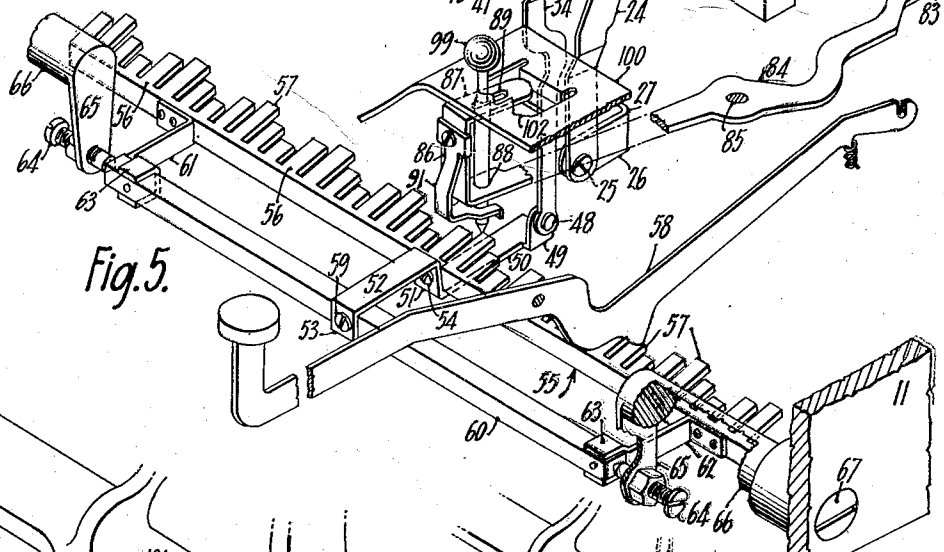

Fig. 5.

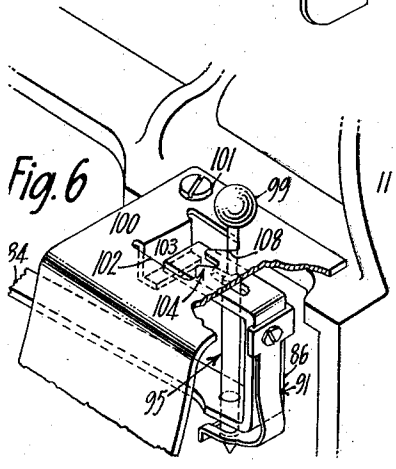

Fig. 6

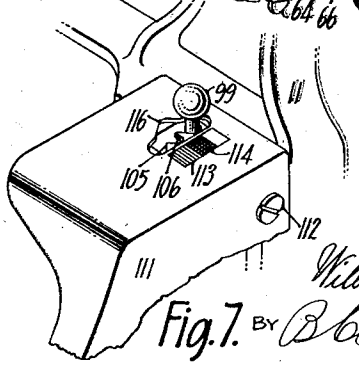

Fig. 7.

INVENTOR:

William F. Helmond

BY R. B. Stickney

ATTORNEY.

Patented June 27, 1939

2,163,943

UNITED STATES PATENT OFFICE

2,163,943

TYPEWRITER MACHINE

William F. Helmond, West Hartford, Conn., assignor to Underwood Elliott Fisher Company, New York, N. Y., a corporation of Delaware

Application October 5, 1936, Serial No. 104,002

1 Claim. (Cl. 197—157)

This invention relates to bichrome or ribbon-shift mechanism of typewriting machines, and is illustrated as mounted upon a standard Underwood machine.

It has been the practice to provide a fingerpiece which is shiftable to control the selection of one or another color stripe of the ribbon for use at the type strokes. It has also been the practice to provide for a shift to stenciling position, when it is not desired for the ribbon to vibrate at the type strokes.

It has been found that errors are apt to occur, especially in connection with the stencil-shift. The bichrome mechanism is sometimes set for the wrong color; and sometimes it is set to stencil-position, when it should have been set to either red or black position. These mistakes are apt to occur in rapid operations, when the operator may not take time to give the required attention to the setting.

It is an object of the invention to overcome this difficulty, and to make it very convenient and certain to effect the shift of the bichrome mechanism from red to black or vice versa; or from either red or black to stencil-position, or vice versa.

It has been the practice to have a selector movable to three positions in a row, of which one extreme position would be black, and the other extreme position would be red; while the midway position would be for stenciling. This invention aims at reducing or eliminating mistakes, as well as to render the machine more speedy and certain in operation.

In order to gain these and other advantages, there is employed preferably an erect vibratable fingerpiece, which may normally be stationed in black-ribbon position, and may be shifted immediately towards the left, to red position. By means of abrupt stops this fingerpiece is limited to a short stroke, and its use is practically automatic, since the operator needs only to push the fingerpiece to the left as far as it will go, or to push it to the right as far as it will go, thus securing red or black. This simple operation may be the only one the operator would need to use for many days, or perhaps for weeks; since a large proportion of operators have no occasion to produce typewritten stencil sheets.

When it is desired to write a stencil, it is a simple matter to shift the bichrome fingerpiece entirely out of said red or black range, and into another field. This field may be at the right-hand of the red-and-black field. To get the fingerpiece into stenciling position, the invention provides that the operator shall first press the fingerpiece backwardly until it passes by the stop which defines one border of the black-and-red field. Then, by pressure of the finger towards the right, the operator may bring it over or past the edge of said stop, and thus may bring said fingerpiece into stenciling position, in which the ribbon will not be vibrated at the type strokes. Upon returning this fingerpiece to black or red position the operator merely presses it to the left against a stationary cam edge, enabling the fingerpiece to be inclined rearwardly and to pass the obstruction and drop into either the red or the black position. A spring then snaps the finger piece into erect position, and so locks it in the black-and-red field, to resume ordinary work. The described member which serves as a field-stop and as a cam resembles a stationary tooth. The pressure of the fingerpiece to the left, will enable the cam to force the fingerpiece rearwardly, and permit the fingerpiece thus to pass over it, so that the spring may snap the fingerpiece back into upright position.

It will be seen that a further advantage is gained in having the red-and-black positions in a single field, and in having the non-printing or stenciling position at the right of the red-and-black field, because liability of error is avoided since the fingerpiece does not have to move over into the non-printing field except under special circumstances, when the attention of the operator is particularly directed to setting it properly.

Other features and advantages will hereinafter appear.

In the accompanying drawing,

Figure 1 is left side sectional elevation showing the fingerpiece and the associated parts, the fingerpiece being in the vertical position and set for red.

Figure 2 is a view similar to Figure 1 showing the fingerpiece tilted against the spring into the rear position in which it is free to be moved to any desired setting position.

Figure 3 is a plan view showing a finger in contact with the fingerpiece which is set for red, the finger being movable laterally to the right in the direction of the arrow until the fingerpiece passes the intermediate barrier and resiliently takes the position indicated in dot-and-dash in which it is set for black.

Figure 4 is a view similar to Figure 3 showing the thumb in contact with the fingerpiece which is set for black, the thumb being movable rearwardly and laterally in the direction of the arrow until the fingerpiece passes over the stop and

resiliently takes the position indicated in dot-and-dash in which it is set for non-printing or stenciling, or the fingerpiece may be shifted laterally to return it to the red position.

Figure 5 is a right perspective showing the setting device and the cooperative ribbon-vibrating mechanism.

Figure 6 is a left perspective of the setting device with the typewriter-casing removed.

Figure 7 is a left perspective of the setting device showing the fingerpiece set in the non-printing or stenciling position.

The main frame 11 of a typewriter supports a platen 12 mounted on a usual carriage (not shown). A frame 13 has a forwardly extending right angularly bent arm 14 mounted thereon. A platen case-shift rail 15 is shown part broken away. A bichrome ribbon 16 having a lower red stripe and an upper black stripe is mounted on a ribbon guide 17 positioned on the upper end of a biforked ribbon vibrator 18 which is vertically supported on the pivotal mounting 19 on the front end of a horizontally and forwardly extending actuating arm 20 pivotally mounted on a pin 21 which extends horizontally and laterally from the end of a bracket 22 in parallel with the case-shift rail 15 on the rear of which it is mounted. A cylindrical pin 23 is mounted on the upper rear end of the arm 20 so that as this pin 23 is moved rearwardly and forwardly the bichrome ribbon 16 is raised and lowered respectively to and from the printing point on the platen 12.

A main actuating arm 24 is pivoted at its lower end for fore and aft movement on a pivot screw 25 transversely mounted in a forwardly extending arm 26 of a right-angled bracket 27 secured in the frame 11 of the machine. The pin 23 slidingly engages an inclined slot 28 so that rocking movement of the arm 24 vibrates the ribbon 16 to interpose the ribbon between the type (not shown) and the platen.

A rearward extension 29 of the arm 24 mounts a lateral horizontally extending pin 30 on which is pivotally mounted a toggle-link 31. The other link 32 of the toggle is joined to the first link 31 by a screw 33 to which is also pivotally secured the upper end of a depending arm 34 mounted vertically in the machine. A bracket 35 overlies and is secured to the horizontal extension of the bent arm 14 by a screw 36 which also fastens an upstanding arm 37 to the arm 14. The arm 37 rises high enough to lie in front of the pin 30. A ridge 38 in the arm 37 and a foot 39 engage parts of the bracket 35 and hold the arm 37 securely in the vertical position. The bracket 35 has a flat vertical piece 40 extending forwardly and then downwardly in a plane parallel with that of the arms 24 and 34 and the toggle 31, 32. A lateral and horizontal pin 41 is mounted in the upper end of the arm 42 which swings forwardly and backwardly on a pivot screw 43 laterally mounted in the lower end of the front depending part of piece 40. The pin 41 engages a slot 44 cut in the front end of the toggle-arm 32. It is evident that the pin 41 and the bottom of the slot 44 determine the extreme forward position of the toggle-arm 32. A spring 45 is mounted on the bracket piece 40 and is tied to a pin 46 which extends laterally from the arm 42 and therefore tends to maintain the arm 42 in the forward position. A coil spring 47 is mounted on the lower front end of the bracket-piece 40 and is attached to the vertical arm 24 and tends to hold the arm 24 in the forward position.

A pivot pin 48 links the lower end of the arm 34 with a vertical lug 49 mounted on the inner extremity of a horizontal, bendable, inwardly projecting arm 50 which has an intermediate upward right-angled bend 51, a forward extension 52, and a front downward right-angled bend 53. A screw 54 in the bend 51 secures a universal bar 55 and reinforces the arm 50. The universal bar 55 has an upper rearwardly projecting flange 56 which is split into rearwardly and upwardly inclined tongues 57 of various lengths and heights proportioned to key-levers in various key-banks, a key-lever 58 being shown in engagement with one of the tongues 57. A screw 59 engages the front bend 53 and secures it on the top and front of a square-shaped rock-shaft 60. Supporting brackets 61, 62 are pinned to the universal bar 55 near either end and carry forwardly extending yokes 63 which are fastened to the rock-shaft 60 at either end. Adjustable pivot screws 64 mounted in the ends of the rock-shaft 60 are supported in arms 65 depending from sub-shafts 66 horizontally mounted inside the frame 11 of the machine by screws 67 accessible on the outside of the frame. It is now clear that as the key-lever 58 is depressed the arm 34 actuates the toggle 31, 32, and thereby rocks the lever 24 to move the ribbon 16 up into printing position.

A horizontally and transversely extending arm 68 has on the rear edge a series of faces or stops for engagement by the pivoted arm 42, a "stenciling" face 69, a "black" face 70, and a "red" face 71, all in laterally stepped relationship and separated by inclines, the face 69 at the right being nearest the front and the face 71 at the left being nearest the rear. The swinging arm 42 resiliently engages one of the stops, or slides over the adjacent incline as the arm 68 is moved from right to left, or vice versa. The particular stop face selected determines the position of the arm 42 and therefore of the pin 41, and so as the toggle 31, 32 is actuated the ribbon 16 is raised to a plurality of printing positions, or not at all, according to the lateral setting of the arm 68. As shown in Figure 5 the arm 42 is in engagement with the face 71 so that the red stripe of the ribbon 16 is interposed at the printing point. The face 70 effects the positioning of the black stripe of the ribbon 16, and the face 69 effects the positioning of the ribbon in the non-printing or stenciling position.

The horizontal arm 68 has a rearwardly and right-obliquely extending arm 72 connected by a pivot screw 73 with the horizontal arm 74 which latter is connected by a pivot screw 75 with a transversely sliding arm 76. This arm 76 has horizontal slots 77 sliding on bearing screws 78 mounted on studs 79. The horizontal arm 76 carries three stops, an overthrow stop 80 for red, an overthrow stop 81 for black, and an overthrow stop 82 for the stenciling or non-printing position. These stops intercept the arm 24 to prevent any excess rearward movement and so prevent any excess elevation of the ribbon 16.

A pivot screw 83 links the right end of the arm 74 to a lever 84 extending from front to rear and mounted for swinging to the right and left on a pivot pin 85 which depends vertically from a bracket mounted in the frame 11 of the machine. The lever 84 terminates at the front in a vertical piece 86 which is turned back at the top to form a horizontal piece 87 which overlies the lever 84. A pivot hole 88 in the arm 84 directly underlies a slot 89 in the top horizontal rearwardly extending piece 87. A screw 90 secures to

the vertical piece 86 a flat spring 91 which has a bottom rearwardly bent horizontal extension 92 terminating at the inner end in a short downwardly extending end 93. A medial slot 94 increasingly apertured at the rear permits the insertion of the bottom of a fingerpiece 95 in the extension 92. This fingerpiece 95 passes through the pivot hole 88 in which it may be tilted and also up through the front-to-rear slot 89 in the top piece 87, and terminates at the bottom in a conical lower end 96 which is spaced from the main cylindrical body of the fingerpiece 95 by an annular recess 97 into which the sides of the slot 94 enter when the bottom 96 of the fingerpiece 95 is in the operative position in the horizontal extension 92 of the spring 91. The fingerpiece 95 terminates at the top in a reduced cylindrical neck or stem 98 which mounts a ball or knob 99. It is clear that the annular recess 97 intercepts the rear of the slot 94 when the fingerpiece 95 is in the vertical or a set position so that the spring 91 tends resiliently to maintain the fingerpiece 95 in a vertical position.

The ribbon-vibrator mechanism so far described, relates to my co-pending application, Serial No. 91,020, filed July 17, 1936.

A plate 100 is secured by a screw 101 to the frame 11 and has a central aperture 102, the rear wall of which carries a dependent L-shaped flange 103 which underlies the piece 87 of the lever 84 for supporting the latter. The front wall 104 of the aperture 102 (Figure 4) has an edge formed with three spaced notches or recesses, the two at the left being separated by a barrier 105, which is intermediate the two left recesses, the recesses being connected with the barrier by relatively low inclined surfaces, which are symmetrical with reference to each other, and which cam the fingerpiece 95 as it is moved from side to side. At the right of the central recess is a stop 106 having a rearwardly extending edge terminating in a barrier projecting rearwardly, substantially at right angles to a line through the bottoms of all the recesses, much further than the first barrier, and having its right side 107 inclined down to a recess 108 at the right. It is clear that a finger 109 applied to the knob 99, as shown in Figure 3, in the direction of the arrow, moves the fingerpiece 95 from the red position to the right into the black position, as the neck 98 of the fingerpiece 25 engages the inclined edge and passes over the barrier 105 against the resistance of the spring 91 as shown distorted in Figure 2. Similarly, the application of the finger 109 to the right side of the knob 99, and pressure in the direction opposite to the arrow returns the fingerpiece from the black to the initial red position. Both adjustments are made with a simple substantially straight line movement of the finger 109. Referring now to Figure 4, the fingerpiece 95 is shown in the position in which it most frequently stands, which is the central or black position, with the neck 98 adjacent the rearwardly extending wall or stop 106 at its right, which stop is substantially parallel with the ends of aperture 102. A rearward and rightward thrust by the operator's thumb 110 moves the neck 98 to the rear over the end of the stop 106, whereupon the neck 98 resiliently engages the inclined surface 107, and under pressure from the spring 91 rides down to the non-printing or idle-ribbon position shown in dot-and-dash lines at right. From this last position the finger 109 easily moves the knob 99 to the left to either of the bichrome setting positions.

A casing 111 secured to the frame 11 by a screw 112 carries approximate the fingerpiece 95, a chart comprising a red index 113, a black index 114, and a non-printing or stenciling index 115. A cutaway 116 at the rear of an opening in the casing back of the chart permits attaching and detaching the casing 111 without interference with the fingerpiece 95.

It will be seen from the foregoing that the finger-piece 95 may be moved within a substantially rectangular field at one side of which is arranged the barrier 105, the stop 106 and the second barrier 107. The rectangular field is defined by the aperture 102, the lateral ends of which form abutments or abrupt shoulders for limiting lateral movement of the finger-piece 95 within the field of adjustment. The mentioned slot ends and the stop 106 present parallel stop faces or abrupt shoulders and the barrier 105 presents antiinclined faces contiguous respectively with one end of slot 102 and the stop 106, each face of the barrier 105 receding toward the corresponding stop face, the other barrier 107 being inclined to recede toward the other end of slot 102. The spring 91 yieldably presses the finger piece 95 toward one side of the field of adjustment and into cooperation with the detent means comprising the barriers 105, 107 and the stop 106.

Variations may be resorted to within the scope of the invention, and portions of the improvements may be used without others.

Having thus described my invention, I claim:

The combination with a ribbon vibrating mechanism, including a manually operable finger piece; of a plate having a substantially oblong slot through which the finger piece extends, one wall of the slot having at least three recesses arranged rectilinearly; a comparatively short stop having gently sloping walls separating two of the recesses; a comparatively long stop separating the first named pair of recesses from the next adjacent recess and having an abrupt side facing the pair of recesses to prevent access of the finger piece to the third recess, when moving from the left hand recess to the intermediate recess, the long stop permitting passage of the finger piece between its outer end and the opposite wall of the slot; and a spring to press the finger piece toward that wall of the slot having the three recesses, to insure entry of the finger piece into the selected recess, and to render it necessary for the operator to intentionally exert additional force against the finger piece to move it around the free end of the long stop, that face of the long stop leading to the third recess being gently sloped to guide the finger piece into the third recess, once it has been lifted over said stop.

WILLIAM F. HELMOND.