June 7, 1927. 1,631,262

C. E. P. GOURDOU

VARIABLE PRESSURE OPERATED EXPANSION DEVICE

Filed Jan. 23. 1926

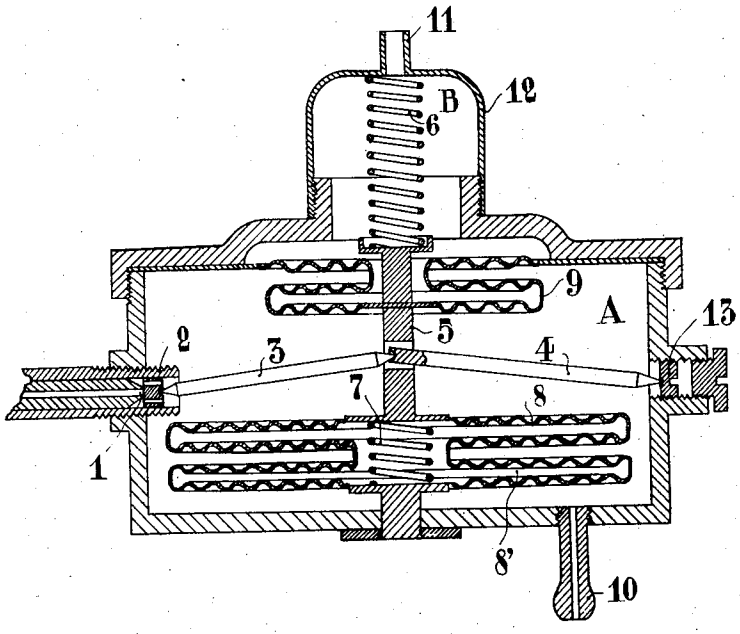

INVENTOR.

Charles Edouard Pierre Gourdou.

BY

ATTORNEY.

Patented June 7, 1927. 1,631,262

UNITED STATES PATENT OFFICE.

CHARLES EDOUARD PIERRE GOURDOU, OF ST. MANDE, FRANCE.

VARIABLE-PRESSURE-OPERATED EXPANSION DEVICE.

Application filed January 23, 1926, Serial No. 83,294, and in France February 5, 1925.

The object of my invention is to provide a variable pressure operated expansion device essentially characterized by the fact that, for the purpose of modifying the adjustment of the expansion gear, I use a variable auxiliary pressure.

In order to make my invention more clearly understood, I have illustrated, as an example, an embodiment thereof in the drawing appended hereto.

Referring to said drawing:

The compressed gas intended to be expanded under variable pressure is led through a duct to the inlet 1 of the expansion device.

This inlet is more or less closed by means of a clapper valve 2 kept in position by links 3 and 4.

Said links are assembled in a rod 5 adapted to be moved up and down by the action of springs 6, 7, of an aneroid cap 8, 8′ and of a more or less complex diaphragm 9.

As shown by the drawing, the expansion device is partitioned by the tight diaphragm 9 into two compartments, i. e., a lower compartment A, and an upper compartment B.

Let, then, p be the expansion pressure in the lower compartment, H the pressure in the upper compartment, s and S the surfaces of diaphragm 9 and of cap 8, R the action of springs 6 and 7.

The balance equation on the whole of the membranes will read:

$$p(s-S)+Hs-Rs=O$$

or

$$p+\frac{s}{S-s}(R-H)$$

neglecting the effect of the pressure of the compressed gas on clapper valve 2, a pressure transmitted with very high reduction ratio by links 3 and 4 to rod 5.

As will be apparent, p (the expansion pressure) is linear function of H.

p decreases when H increases.

The multiplication ratio is

$$\frac{s}{S-s},$$

as great as I like.

The foregoing description will serve to materialize the practical application of the following characteristic, viz, to cause an expansion pressure to be varied by the action of a variable auxiliary pressure influencing the expansion adjusting gear.

Any usual regulator, or, rather, any usual form of adjustment levers may be so arranged as to materialize the above set forth characteristic, without such an embodiment departing from the scope of my invention.

The device or gear might, especially, serve to measure a low H pressure by means of measuring standard p.

The compressed gas admission valve could, in this case, be different from the one shown, for it would have to operate only within the limits ascribed to p, such limits determining the useful compression.

In this case, the diaphragms might be made directly to control the valves.

Such an embodiment is an application of Pascal's principle, wherein pistons are replaced by diaphragms, equilibrium being obtained when the pressures on the opposite operative surfaces are inversely proportional to said surfaces.

More particularly, the above described device may serve to supply an airman with expanded oxygen in sufficient quantity at any given altitude.

In fact, delivery through a calibrated aperture 10 is proportional to the square root of the difference between inside pressure p and outside pressure H.

Apparently, to obtain suitable deliveries proportional to altitude, one has but suitably to select expansion pressure p which may remain constant, and to select the caliber or gauge of the aperture so as to ensure both inception of delivery at an altitude corresponding to pressure p and any value thereof at another altitude.

In practice, however, the apertures having to be minute, viscosity intervenes and delivery tends to become constant and even to decrease when H decreases.

I am, therefore, led to try and increase P when H decreases.

The above described device enables me to to do so, pressure H getting established on diaphragm 9 through aperture 11.

I thus obtain any required delivery.

Adjustment is possible by tightening cap 12, which sets spring 6, and by positioning stop 13, which adjusts the position of 3 and 4.

In operation the high pressure bottle is connected with the nozzle 1. On the ground

level the atmospheric pressure since the opening 10 is always open to the atmosphere crushes the aneroid capsules 8 and the inlet opening 1 is closed. It should be noted that as long as there is no delivery, the pressure in A is the same as the outer atmospheric pressure. At the altitude chosen for the beginning of the supply, the spring 7 has expanded sufficiently to open the inlet 1. At that moment the apparatus begins to deliver. As the apparatus rises, if the action of the undulated capsules 9 were neglected, the operation of the aneroid capsules 8 would result in maintaining on the inside of the chamber A a constant pressure as regards absolute value, since there is a vacuum in the capsules 8. Now, what the inventor desires, as has been explained at the beginning of the description, is that the pressure on the inside of the sole chamber progressively increases as there is an ascent in the atmosphere.

Let us suppose we are in a state of equilibrium at a given altitude, capsule 9 being considered as entirely rigid. If, at this moment, the said capsule becomes soft, the difference in pressure between the inside and the outside will collapse it and, under these conditions, the spring 6 will be compressed. Consequently, the levers 3 and 4 will open the inlet opening 1 still further. The result will be that the pressure on the inside of A will rise to a new state of equilibrium, and so forth thereafter. The inside pressure is therefore regulated by the play of the springs 6 and 7 and by the size of the surfaces of the capsules 8 and 9 and their difference in area. As a matter of fact, the opening and closing of inlet 1 are due to the action of the outer pressure on the capsules 8 and the spring 7, the outer pressure being communicated through opening 10. The closing and opening of inlet 1 occur for the same value of the outer pressure and, at that moment, the corrective capsule 9 is inactive.

Having now fully ascertained and disclosed the nature of my said invention as well as the manner in which the same is to be performed, I declare that what I claim is:

1. A variable pressure operated expansion device comprising a fluid tight chamber closed on one side by a diaphragm on top of which a fluid under variable pressure exerts action, an inlet for the admission into the said chamber of the fluid to be expanded, a valve for controlling said admission, and an outlet for the expanded fluid from the said chamber, members connected with the diaphragm and operating on said valve to regulate the admission of the fluid to be expanded into the chamber, said members being submitted to the action of springs and of an aneroid cap located within the chamber.

2. A variable pressure operated expansion device comprising a fluid tight chamber closed on one side by a diaphragm on the top of which a fluid under variable pressure exerts action, a rod integral with said diaphragm, an aneroid cap and springs exerting their action on the said rod, links controlled by the said rod, a valve operated by one of said links to control the admission of the fluid to be expanded into the chamber, and an outlet from the chamber for the fluid expanded therein.

In testimony whereof I affix my signature.

CHARLES EDOUARD PIERRE GOURDOU.