(12) INTERNATIONAL APPLICATION PUBLISHED UNDER THE PATENT COOPERATION TREATY (PCT)

CORRECTED VERSION

(19) World Intellectual Property Organization
International Bureau

(43) International Publication Date
15 February 2007 (15.02.2007)

PCT

(10) International Publication Number
WO 2007/018131 Al

(51) **International Patent Classification:**
GIlB 5/66 (2006.01) ***GIlB 5/851*** (2006.01)
GIlB *5/738* (2006.01)

(21) **International Application Number:**
PCT/JP2006/3 15439

(22) International Filing Date: 28 July 2006 (28.07.2006)

(25) Filing Language: English

(26) Publication Language: English

(30) Priority Data:
2005-233009 11 August 2005 (11.08.2005) JP
60/709,101 18 August 2005 (18.08.2005) US

(71) **Applicant** *(for all designated States except US):* **SHOWA DENKO K.K.** [JP/JP]; 13-9, Shibadaimon 1-chome, Minato-ku, Tokyo 105-8518 (JP).

(72) Inventors; and

(75) Inventors/Applicants *(for US only):* **OSAWA, Hiroshi** [JP/JP]; c/o Showa Denko HD K.K., 5-1, Yawata Kaigan dori, Ichihara-shi, Chiba 290-0067 (JP). **SHIMIZU, Kenji** [JP/JP]; c/o Showa Denko HD K.K., 5-1, Yawata Kaigan-dori, Ichihara-shi, Chiba 290-0067 (JP).

(74) Agents: SHIGA, Masatake et al; 2-3-1, Yaesu, Chuo-ku, Tokyo 104-8453 **(JP).**

(81) **Designated States** *(unless otherwise indicated, for every kind of national protection available):* AE, AG, AL, AM, AT, **AU, AZ, BA, BB, BG, BR, BW, BY, BZ,** CA, **CH, CN, CO, CR, CU, CZ, DE, DK, DM, DZ,** EC, EE, **EG,** ES, **FI, GB, GD, GE, GH, GM, HN, HR, HU, ID, IL, IN, IS, KE, KG, KM, KN, KP, KR, KZ, LA, LC, LK, LR, LS, LT, LU, LV, LY, MA, MD, MG, MK, MN, MW, MX, MZ, NA, NG, NI, NO, NZ, OM, PG, PH, PL, PT, RO, RS, RU,** SC, **SD,** SE, **SG, SK, SL, SM, SY, TJ, TM, TN, TR,** TT, **TZ, UA, UG, US, UZ, VC, VN, ZA, ZM, ZW**

(84) Designated States *(unless otherwise indicated, for every kind of regional protection available):* ARIPO (BW, GH, GM, KE, LS, MW, MZ, NA, SD, SL, SZ, TZ, UG, ZM, ZW), Eurasian (AM, AZ, BY, KG, KZ, MD, RU, TJ, TM), European (AT, BE, BG, CH, CY, CZ, DE, DK, EE, ES, FI, FR, GB, GR, HU, IE, IS, IT, LT, LU, LV, MC, NL, PL, PT, RO, SE, SI, SK, TR), OAPI (BF, BJ, CF, CG, CI, CM, GA, GN, GQ, GW, ML, MR, NE, SN, TD, TG).

Published:
— *with international search report*

[Continued on next page]

(54) Title: MAGNETIC RECORDING MEDIUM, PRODUCTION PROCESS THEREOF, AND MAGNETIC RECORDING AND REPRODUCING APPARATUS

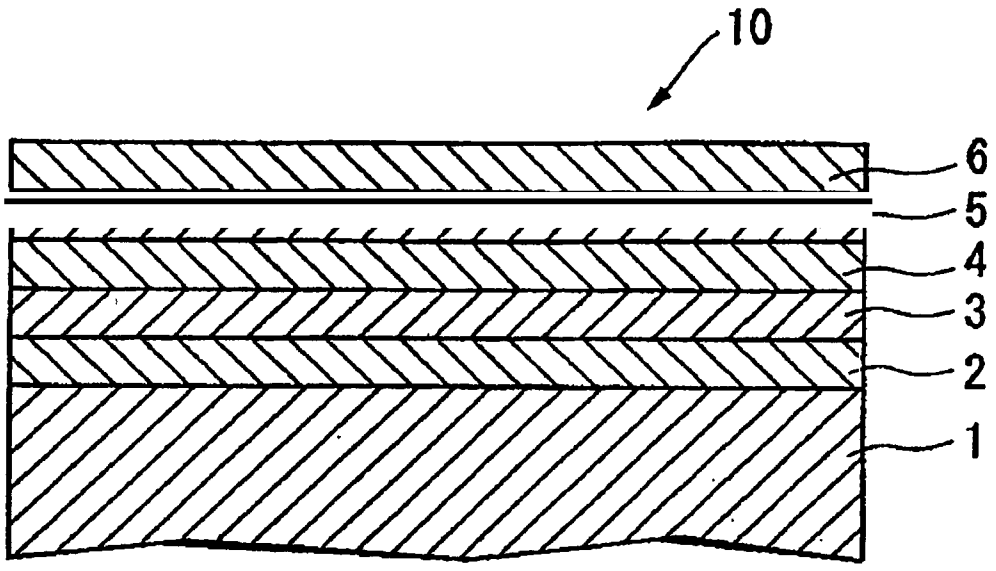

(57) Abstract: In a magnetic recording medium which is able to cope with a higher recording density, there is provided a magnetic recording medium which has a higher retentivity and a lower noise, a production process thereof, and a magnetic recording and reproducing apparatus. The magnetic recording medium is characterized in that at least a non-magnetic base layer, a non-magnetic intermediate layer, a magnetic layer, and a protective layer are laminated in this order on a non-magnetic substrate, and at least one of the layers of the non-magnetic base layer is configured by a WX-based alloy or a MoX-based alloy (X=Zr, Nb, Hf, Ta).

WO 2007/018131 A1

WO 2007/018131 A1

(48) Date of publication of this corrected version:
27 December 2007

(15) Information about Correction:
see PCT Gazette No. 52/2007 of 27 December 2007

For two-letter codes and other abbreviations, refer to the "Guidance Notes on Codes and Abbreviations" appearing at the beginning of each regular issue of the PCT Gazette.