(12) INTERNATIONAL APPLICATION PUBLISHED UNDER THE PATENT COOPERATION TREATY (PCT)

(19) World Intellectual Property Organization
International Bureau

(43) International Publication Date
17 July 2008 (17.07.2008)

PCT

(10) International Publication Number
WO 2008/083738 A1

(51) International Patent Classification:
G01C 21/36 (2006.01)

(21) International Application Number:
PCT/EP2007/008722

(22) International Filing Date: 5 October 2007 (05.10.2007)

(25) Filing Language: English

(26) Publication Language: English

(30) Priority Data:

60/879,523	10 January 2007 (10.01.2007)	US
60/879,549	10 January 2007 (10.01.2007)	US
60/879,553	10 January 2007 (10.01.2007)	US
60/879,577	10 January 2007 (10.01.2007)	US
60/879,599	10 January 2007 (10.01.2007)	US
60/879,529	10 January 2007 (10.01.2007)	US
60/879,601	10 January 2007 (10.01.2007)	US

(71) Applicant *(for all designated States except US)*: **TOMTOM INTERNATIONAL B.V.** [NL/NL]; Rembrandtplein 35, NL-1017 CT Amsterdam (NL).

(72) Inventor; and

(75) Inventor/Applicant *(for US only)*: **GEELEN, Pieter** [NL/NL]; Rembrandtplein 35, NL-1017 CT Amsterdam (NL).

(81) Designated States *(unless otherwise indicated, for every kind of national protection available)*: AE, AG, AL, AM, AT, AU, AZ, BA, BB, BG, BH, BR, BW, BY, BZ, CA, CH, CN, CO, CR, CU, CZ, DE, DK, DM, DO, DZ, EC, EE, EG, ES, FI, GB, GD, GE, GH, GM, GT, HN, HR, HU, ID, IL, IN, IS, JP, KE, KG, KM, KN, KP, KR, KZ, LA, LC, LK, LR, LS, LT, LU, LY, MA, MD, ME, MG, MK, MN, MW, MX, MY, MZ, NA, NG, NI, NO, NZ, OM, PG, PH, PL, PT, RO, RS, RU, SC, SD, SE, SG, SK, SL, SM, SV, SY, TJ, TM, TN, TR, TT, TZ, UA, UG, US, UZ, VC, VN, ZA, ZM, ZW.

(84) Designated States *(unless otherwise indicated, for every kind of regional protection available)*: ARIPO (BW, GH, GM, KE, LS, MW, MZ, NA, SD, SL, SZ, TZ, UG, ZM, ZW), Eurasian (AM, AZ, BY, KG, KZ, MD, RU, TJ, TM), European (AT, BE, BG, CH, CY, CZ, DE, DK, EE, ES, FI, FR, GB, GR, HU, IE, IS, IT, LT, LU, LV, MC, MT, NL, PL, PT, RO, SE, SI, SK, TR), OAPI (BF, BJ, CF, CG, CI, CM, GA, GN, GQ, GW, ML, MR, NE, SN, TD, TG).

Declaration under Rule 4.17:

— *as to applicant's entitlement to apply for and be granted a patent (Rule 4.17(ii))*

Published:

— *with international search report*

(54) **Title:** NAVIGATION DEVICE AND METHOD FOR DISPLAYING NAVIGATION INFORMATION

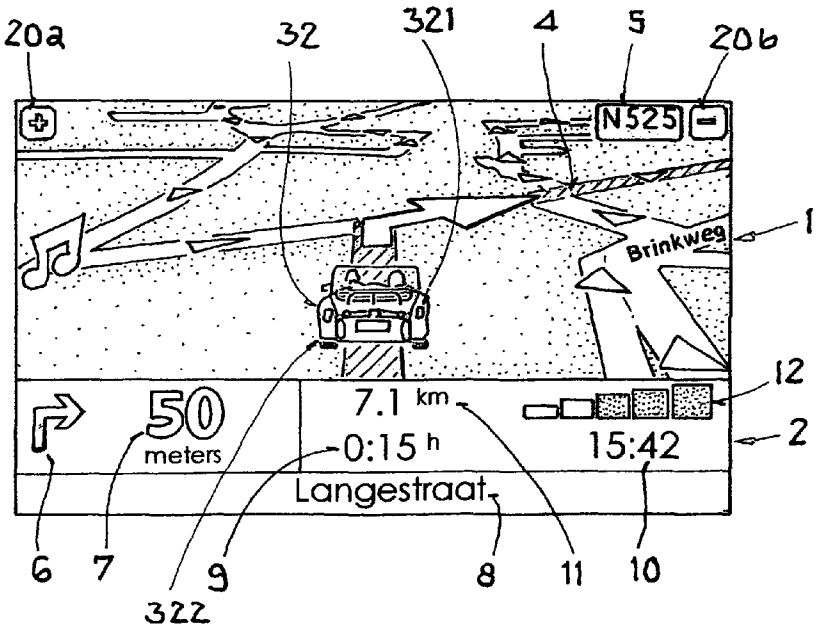

(57) **Abstract:** A method of displaying navigation information and a navigation device programmed with a map database and software - operable to display a current position of the device on a road navigation map, - operable to save several icons in at least one directory, - operable to display several icons on a screen, so that the user can choose at least one icon, - operable to display said at least one icon on said road navigation map assigned to said current position, and - operable to receive at least one icon from an external device, so that the user can add at least one icon to said at least one directory by means of an interface of said navigation device.

WO 2008/083738 A1

Navigation device and method for displaying navigation information

Field of the Invention

This invention relates to a navigation device that can display navigation information. The device finds particular application as an in-car navigation system.

Background

Prior art navigation devices based on GPS (Global Positioning System) are well known and are widely employed as in-car navigation systems. Such a GPS based navigation device relates to a computing device which in a functional connection to an external (or internal) GPS receiver is capable of determining its global position.

Moreover, the computing device is capable of determining a route between start and destination addresses, which can be input by a user of the computing device. Typically, the computing device is enabled by software for computing a "best" or "optimum" route between the start and destination address locations from a map database. A "best" or "optimum" route is determined on the basis of predetermined criteria and need not necessarily be the fastest or shortest route. The selection of the route along which to guide the driver can be very sophisticated, and the selected route may take into account existing and predicted traffic and road conditions, historical information about road speeds, and the driver's own preferences for the factors determining road choice. In addition, the device may continually monitor road and traffic conditions, and offer to or choose to change the

route over which the remainder of the journey is to be made due to changed conditions. Real time traffic monitoring systems, based on various technologies (e.g. mobile phone calls, fixed cameras, GPS fleet tracking) are being used to identify traffic delays and to feed the information into notification systems.

The navigation device may typically be mounted on the dashboard of a vehicle, but may also be formed as part of an on-board computer of the vehicle or car radio. The navigation device may also be (part of) a hand-held system, such as a PDA (Personal Navigation Device) a media player, a mobile phone or the like. The user interacts with the navigation device to tell it the journey they wish to make. The device selects a route for the journey. The user may intervene in, or guide the route selection process. The device provides visual and audible instructions to show the user the vehicle's current position and to guide the user along a chosen route. User interaction with the device may be by a touch screen, by steering column mounted remote control, by voice activation or by any other suitable method.

By using positional information derived from the GPS receiver, the computing device can determine at regular intervals its position and can display the current position of the vehicle to the user. The navigation device may also comprise memory devices for storing map data and a display for displaying a selected portion of the map data.

Also, it can provide instructions how to navigate the determined route by appropriate navigation directions displayed on the display and/or generated as audible signals from a speaker (e.g. 'turn left in 100 m'). Graphics depicting the actions to be accomplished (e.g. a left arrow indicating a left turn ahead) can be displayed in a status bar and also be superimposed upon the applicable junctions/turnings etc. in the map itself. It is known to enable in-car navigation systems to allow the driver, whilst driving in a car along a route calculated by the navigation system, to initiate a route recalculation.

This is useful where the vehicle is faced with construction work or heavy congestion. It is also known to enable a user to choose the kind of route calculation algorithm deployed by the navigation device, selecting for example from a 'Normal' mode and a 'Fast' mode (which calculates the route in the shortest time, but does not explore as many alternative routes as the Normal mode).

It is also known to allow a route to be calculated with user defined criteria; for example, the user may prefer a scenic route to be calculated by the device. The device software would then calculate various routes and weigh more favourably those that include along their route the highest number of points of interest (known as POIs) tagged as being for example of scenic beauty.

In order to determine a route between start and destination addresses, the navigation device uses map data. Depending on stored or input preferences (shortest route, fastest route, scenic route, ...), the navigation device computes an "optimum" route using the stored map data. However, the "optimum" route may differ from time to time, depending on the current situation on the road. It may for instance depend on the amount of vehicles on certain segments of the road, possible traffic jams, congestion, diversions etc.

US 2002/0128770 A1 describes a system to provide a driver with real-time information about the situation on the road. The system uses cameras to make pictures of the earth's surface. The cameras may be cameras positioned on the ground or may be cameras positioned on a satellite. The server transmits (part of) a picture to a navigation device mounted on a client's vehicle. The navigation device is arranged to display the received picture to allow the client to assess the situation on the road.

Known navigation devices are arranged to take into account changing road situations and conditions. Such navigation devices are arranged to receive

information on traffic jams from a server. This information is used by the navigation device when planning a route or may be used to re-route an already planned route. The information about traffic jams is for instance collected using detection systems embedded in the road surface measuring the speed of the passing vehicles.

EP 1 611 416 A1 describes a navigation device. The user can, by touching the screen, task away completely form a 2D or 3D navigation map to a menu screen which displays one or more options that, if selected through a further touch action, initiate a re-calculation to find a detour away from the planned route.

Summary

It is an object of the invention to provide a navigation device and another object of invention to provide a method allowing a more flexible design.

This need may be met by a navigation device and a method according to the independent claims.

An aspect of the invention is a navigation device programmed with a map database and software. The navigation device is operable to display a current position of the device on a road navigation map. The current position of the device is preferably derived from a measured actual geographic position. E.g. a GPS-Signal could be estimated to derive the current position.

The navigation device is operable to save several icons in at least one directory. The icons are saved in an internal memory or external memory. Said external memory is for example a memory card, insertable into a card slot of the navigation device.

The navigation device is operable to display several icons on a screen, so that the user can choose at least one icon. In a further refinement the icons are displayed successively. In another further refinement the saved icons are displayable in a list to choose from.

The navigation device is operable to display said at least one icon on said road navigation map assigned to said current position.

The navigation device is operable to receive said at least one icon from an external device, so that the user can add at least one icon to said at least one directory by means of an interface of said navigation device. In further refinements the interface is at least one of a wireless connection, a cable connection and a memory card slot.

The device is preferably operable to interchange icons with said external device. For example the interface is a slot of a SD-memory card or a USB (Universal Serial Bus) connector or a wireless bluetooth connection. In a further refinement a user interface menu for changing icons is implemented. In a further refinement software is running on said external device - e.g. a personal computer - interacting with the navigation device via said interface, so that the icons can be created by the user and afterwards the created icons can be imported to said navigation device.

In an embodiment of the invention the device is operable to transmit at least one icon to said external device using said interface of said navigation device. To transmit said at least one icon, preferably said at least one icon is selected by the user using a graphical user interface and afterwards transmitted to a destination directory on said external device – e.g. a personal computer or a memory card.

In a preferred embodiment of the invention the navigation device is operable to automatically resize a received icon to a predetermined size for displaying

on said road navigation map. In a further refinement for resizing the image the number of pixels of said icon is reduced.

In another embodiment of the invention the navigation device is operable to zoom said road navigation map. Said at least one icon is scaled up or down depending on a zoom factor. In a further refinement the icon is additionally scaled depending on the displayed size of the road.

In another embodiment of the invention the navigation device is operable to change the road navigation map between a two-dimensional view and a three-dimensional view. A first icon is assigned to said two-dimensional view and a second icon is assigned to said three-dimensional view. The icon is therefore automatically loaded based upon selecting 2D-view or 3D-view by the user respectively. If a vector graphic is used, the first icon and the second icon are preferably rendered out of corresponding vector data.

In another embodiment of the invention said navigation device is operable to change the road navigation map between a daytime view and a nighttime view. A first icon is assigned to said daytime view and a second icon is assigned to said nighttime view. The icon is therefore automatically loaded based upon selecting daytime-view or nighttime-view by the user respectively. If in a further refinement a vector graphic is used, the colours of the planes of the vector graphic are changed to create the first icon and the second icon preferably.

In a preferred embodiment said at least one icon is a two-dimensional image. Images in predefined resolution range are accepted. In a alternative refinement images will be blocked, which do not use a predefined specification. Instead a default image is used.

In another embodiment said at least one icon is a vector graphic. The current view of the icon is rendered when needed. In another embodiment said

vector graphic is three-dimensional. Depending on the angle the user is viewing at the icon the appearance of the icon is estimated using vector data. For example, if the navigation map view has the north on top and the device is driving southwards a front view of a car is rendered from the three dimensional vector graphic data. If the car is driving westwards the left side view of the car is rendered and so on.

In another embodiment of the invention said at least one icon is animated depending on at least one estimated or measured parameter like daytime, nighttime, speed, acceleration, slowing down or distance.

In another embodiment of the invention one colour (e.g. red – RGB 255, 0, 0) is transparent, showing a part of said road navigation map underneath. This is useful for windows of cars, free spaces etc..

Another aspect of the invention is a method of displaying navigation information. The method is deployed in a navigation device programmed with a map database and software operable to display a current position of the device on a road navigation map.

Several icons are saved in at least one directory.

Said several icons are displayed on a screen, so that the user can choose at least one icon.

Said at least one icon is displayed on said road navigation map assigned to said current position.

At least one icon is received from an external device so that the user can add at least one icon to said at least one directory by means of an interface of said navigation device.

Brief Summary of the Drawings

These and other aspects of the present invention will become apparent from and elucidated with reference to the embodiments described hereinafter. The present invention will be described with reference to the accompanying drawings, in which

Figure 1 shows a schematic display with several icons;

Figure 2 shows a user specific icon assigned to the current position on a road navigation map;

Figures 3 and 4 show a user specific icon on a road navigation map, whereas the size of the icon is scaled according to a zoom factor; and

Figure 5 shows a schematic of a navigation device connected to an external device.

Detailed Description of Exemplary Embodiments

A Navigator software runs for instance on a touch screen (i.e. stylus controlled) Pocket PC powered PDA device. It provides a GPS based navigation system when the PDA is coupled with a GPS receiver. The combined PDA and GPS receiver system is designed to be used as an in-vehicle navigation system. The invention may also be implemented in any other arrangement of navigation device, such as one with an integral GPS receiver/computer/display. The navigation device may implement any kind of position sensing technology and is not limited to GPS; it can hence be implemented using other kinds of GNSS (global navigation satellite system)

such as the European Galileo system. Equally, it is not limited to satellite based location/velocity systems but can equally be deployed using ground-based beacons or any other kind of system that enables the device to determine its geographic location.

In figure 1 nine different predefined symbols 31 to 39 are displayed using a menu in "preferences". Several icons 31 to 39 are displayed on a screen, so that the user can choose at least one icon (31-39) from the image list. The user can select one of these images 31 to 39 by tapping the touch sensible screen at the position of the image 31 to 39. Subsequently the selected icon (31-39) replaces the previous icon (31-39). Each icon (31-39) is surrounded by a single color 30, which is transparent in a navigation view. In the exemplary embodiment of figure 1 said color 30 is white. Additionally the window pane of the car of icon 32 comprises said color 30 resulting in a transparent effect shown in figure 2.

To display a current position of the device on a road navigation map the selected icon (31-39) is at the position of the device on a road navigation map. The icons 31 to 39 of figure 1 are saved in at least one directory of an internal memory of the navigation device or external memory. E.g. the root directory is used. Therefore the user is able to add some new images in the directory and is able to change the current location icon (31-39) in the navigation map 1 views using said added alternative image. The external memory is a memory card for example. After selecting at least one icon (31-39), said at least one icon (31-39) is displayed on said road navigation map 1 assigned to the current position.

The Navigator software, when running on a PDA, results in a navigation device that causes the normal navigation mode screen shown in Figure 2 to be displayed.

This view provides driving instructions using a combination of text, symbols, voice guidance and a moving map. Key user interface elements are the following:

In figure 2 a day view 3-D map 1 occupies most of the screen. The map 1 shows the user's car, using an icon 32. Additionally the map 1 shows the immediate surroundings of the user's car, rotated in such a way that the direction in which the car is moving is always "up". Running across the bottom quarter of the screen is the status bar 2. The current location of the device, as the device itself determines using conventional GPS location finding and its orientation (as inferred from its direction of travel) is depicted by the icon 32. The route calculated by the device (using route calculation algorithms stored in device memory as applied to map data stored in a map database in device memory) is shown as darkened path 4 superimposed with arrows giving the travel direction. On the darkened path 4, all major actions (e.g. turning corners, crossroads, roundabouts etc.) are schematically depicted by arrows overlaying the path 4. Numbers of motorways 5 (here N525) are displayed adjacent to the displayed motorway itself.

The status bar 2 also includes at its left hand side a schematic 6 depicting the next action (here, a right turn). The status bar 2 also shows the distance 7 to the next action (i.e. the right turn - here the distance is 220 meters) as extracted from a database of the entire route calculated by the device (i.e. a list of all roads and related actions defining the route to be taken). Status bar 2 also shows the name of the current road 8, the estimated time before arrival 9 (here 15 minutes), the actual estimated arrival time 10 (15:42) and the distance to the destination 11 (7.1 km). The GPS signal strength is shown in a mobile-phone style signal strength indicator 12.

In the easiest case the icon 32 indicating the current position is a simple two-dimensional image, using a resolution from 24 x 24 pixels to 128 x 128

pixels. The user can import any picture size. The picture size is automatically resized to the resolution needed. For example the user can photograph his own car and import the corresponding image (e.g. using 2 mega pixel resolution) to a directory, where the icons are stored. The image is than automatically resized to a predetermined size of said icon, so that the width and height does not exceed 80 pixels for example. E.g. a bmp, jpg or gif image could be used. Alternatively a vector graphic using png for example could be used.

A part of the windscreen of icon 32 is transparent, thus the user can see the road through the image of the icon 32. To achieve this effect, a colour e.g. RED (RGB 255, 0, 0) is treated as a transparent colour. Of course, another colour, like GREEN could be used as the transparent one.

In a further embodiment the icon 32 of figure 2 is animated. In case the device is moving - therefore changing the geographic position – the tires 322 look like being rotated. Another possibility is to use indicators lights 321 of the icon 31 start indicating close to the next turn. To achieve this effect, the color of the indicator changes between black and yellow periodically. Additionally the icon 32 is changed in night view. In this case read headlights could be used.

The figures 3 and 4 show other map views. Using the buttons 20a and 20b it is possible to zoom in and zoom out the current view. As shown in the embodiment of figures 3 and 4 the size of the icon 31a/31b is scaled according to the current zoom level of the navigation view. Therefore in figure 3 zoom in results in a more detailed view, hence the size of the icon 31a is larger. In figure 4 zoom out results in a less detailed view, hence the size of the icon 31b is smaller.

If a two-dimensional view is used instead of the three-dimensional views of figures 2 to 4 a second corresponding icon could be used (not shown). E.g. if

the icon 31 is selected, an image of the same car would be used, showing the car from the top. Alternatively the selected icons 31 to 39 will only be shown in the three-dimensional view. In this case in the two-dimensional view only a default symbol will be displayed.

The actual physical structure of the device itself may be fundamentally no different from any conventional handheld computer, other than the integral GPS receiver or a GPS data feed from an external GPS receiver. Hence, memory stores the route calculation algorithms, map database and user interface software; a microprocessor interprets and processes user input (e.g. using a device touch screen to input the start and destination addresses and all other control inputs) and deploys the route calculation algorithms to calculate the optimal route. 'Optimal' may refer to criteria such as shortest time or shortest distance, or some other user-related factors.

More specifically, the user inputs his start position and required destination in the normal manner into the Navigator software running on the PDA using a virtual keyboard. The user then selects the manner in which a travel route is calculated: various modes are offered, such as a 'fast' mode that calculates the route very rapidly, but the route might not be the shortest; a 'full' mode that looks at all possible routes and locates the shortest, but takes longer to calculate etc. Other options are possible, with a user defining a route that is scenic - e.g. passes the most POI (points of interest) marked as views of outstanding beauty, or passes the most POIs of possible interest to children or uses the fewest junctions etc..

Roads themselves are described in the map database that is part of Navigator (or is otherwise accessed by it) running on the PDA as lines - i.e. vectors (e.g. start point, end point, direction for a road, with an entire road being made up of many hundreds of such sections, each uniquely defined by start point/end point direction parameters).

A map is then a set of such road vectors, plus points of interest (POIs), plus road names, plus other geographic features like park boundaries, river boundaries etc, all of which are defined in terms of vectors. All map features (e.g. road vectors, POIs etc.) are defined in a co-ordinate system that corresponds or relates to the GPS co-ordinate system, enabling a device's position as determined through a GPS system to be located onto the relevant road shown in a map.

Route calculation uses complex algorithms that are part of the Navigator software. The algorithms are applied to score large numbers of potential different routes. The Navigator software then evaluates them against the user defined criteria (or device defaults), such as a full mode scan, with scenic route, past museums, and no speed camera. The route which best meets the defined criteria is then calculated by a processor in the PDA and then stored in a database in RAM as a sequence of vectors, road names and actions to be done at vector end-points (e.g. corresponding to pre-determined distances along each road of the route, such as after 100 meters, turn left into street x).

In figure 5 a navigation device 40 is connected to an external device 50. In the exemplary embodiment of figure 5 the external device 50 is a personal computer, connectable to the internet. In figure 5 several possibilities of connecting the navigation device 40 to the external device 50 are shown, although just one connection is needed at a time. The navigation device 50 is operable to receive at least one icon from the external device 50, so that the user can add at least one icon to at least one directory of a memory of said device. The memory can be an internal or external memory, like a memory card 42. The navigation device 40 comprises an interface to receive the icon. In figure 5 the navigation device 40 comprises a card slot 41 for a memory card 42. Alternatively the icon can be received via a cable 43. In this case the interface comprises a driver and a receiver for signals transmitted via said cable 43. The cable connection 43 is a USB-cable for example.

Alternatively the navigation device 40 and the personal computer 50 are connected wirelessly. For the wireless connection 44 a bluetooth connection is preferably used. Hence the navigation device 40 comprises a transceiver as said interface operable to receive and transmit wirelessly. Using the internet connection the user is able to share or download icons to be used.

Various modifications and alterations of this invention will become apparent to those skilled in the art without departing from the scope of this invention, and it should be understood that this invention is not to be unduly limited to the illustrative embodiments.

Claims

1. A navigation device (40) programmed with a map database and software
   - operable to display a current position of the device on a road navigation map (1),
   - operable to save several icons (31 to 39) in at least one directory,
   - operable to display said several icons (31 to 39) on a screen, so that the user can choose at least one icon,
   - operable to display said at least one icon (31a, 31b, 32) on said road navigation map (1) assigned to said current position, and
   - operable to receive at least one icon from an external device (50), so that the user can add at least one icon to said at least one directory by means of an interface (41, 43, 44) of said navigation device (40).

2. Device according to claim 1, operable to transmit at least one icon to said external device (50) using said interface (41, 43, 44) of said navigation device (40).

3. Device according to one of the preceding claims, operable to automatically resize a received icon to a predetermined size for displaying on said road navigation map (1).

4. Device according to one of the preceding claims, operable to zoom the road navigation map (1), whereas said at least one icon is scaled up or down depending on a zoom factor.

5. Device according to one of the preceding claims, whereas at least one colour (30) is transparent, showing a part of said road navigation map (1) underneath.

6. Device according to one of the preceding claims, operable to change the road navigation map (1) between a two-dimensional view and a three-dimensional view, whereas a first icon is assigned to said two-dimensional view and a second icon is assigned to said three-dimensional view.

7. Device according to one of the preceding claims, operable to change the road navigation map (1) between a daytime view and a nighttime view, whereas a first icon is assigned to said daytime view and a second icon is assigned to said nighttime view.

8. Device according to one of the preceding claims, whereas said at least one icon is a two-dimensional image.

9. Device according to one of the claims 1 to 7, whereas said at least one icon is a vector graphic.

10. Device according to one of the preceding claims, whereas said at least one icon is animated depending on at least one estimated or measured parameter like daytime, nighttime, speed, acceleration, slowing down or distance.

11. A method of displaying navigation information, the method being deployed in a navigation device (40) programmed with a map database and software operable to display a current position of the device on a road navigation map (1), whereas

- several icons (31 to 39) are saved in at least one directory,

- said several icons (31 to 39) are displayed on a screen, so that the user can choose at least one icon,
- said at least one icon is displayed on said road navigation map (1) assigned to said current position, and
- at least one icon is received from an external device (50) so that the user can add at least one icon to said at least one directory by means of an user interface (41, 43, 44) of said navigation device (40).

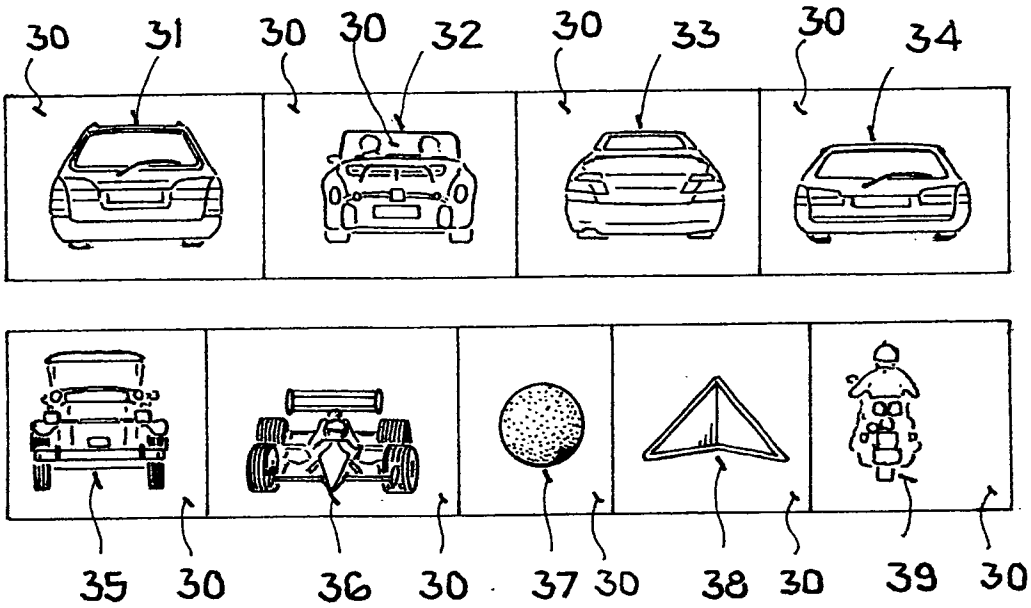
30
31
30
30
32
30
33
30
34
35
30
36
30
37
30
38
30
39
30

FIG. 1

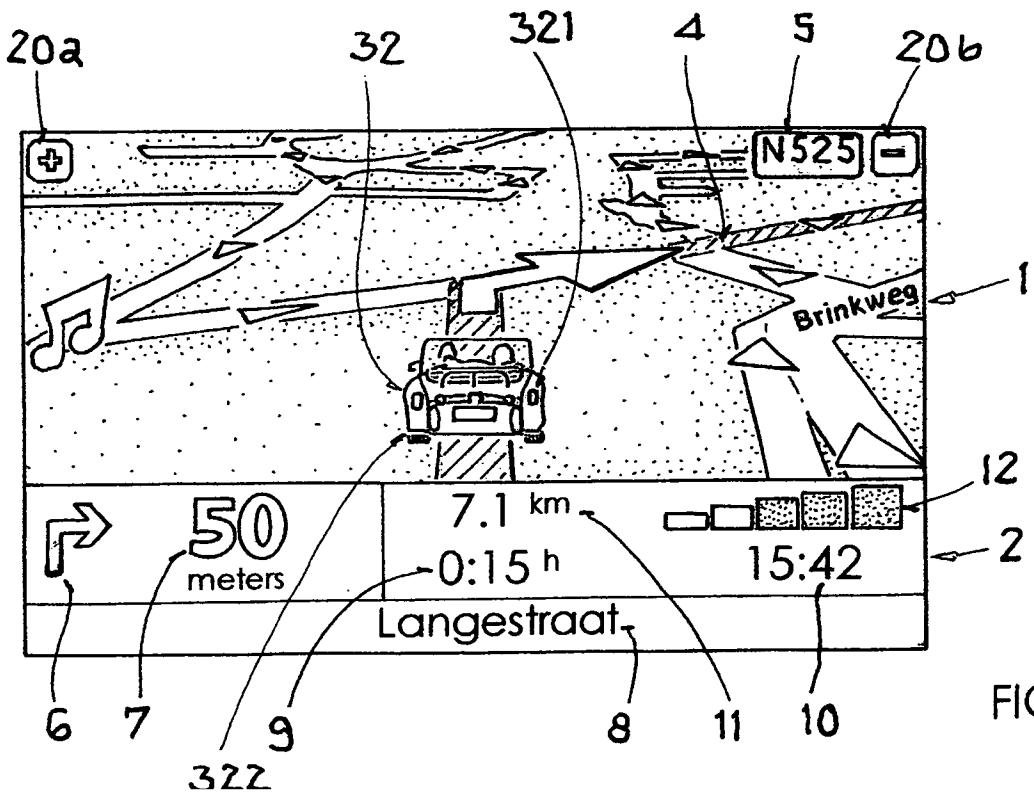
20a
32
321
4
5
20b
N525
Brinkweg
1
12
2
50
meters
7.1 km
0:15 h
15:42
Langestraat
6
7
322
9
8
11
10

FIG. 2

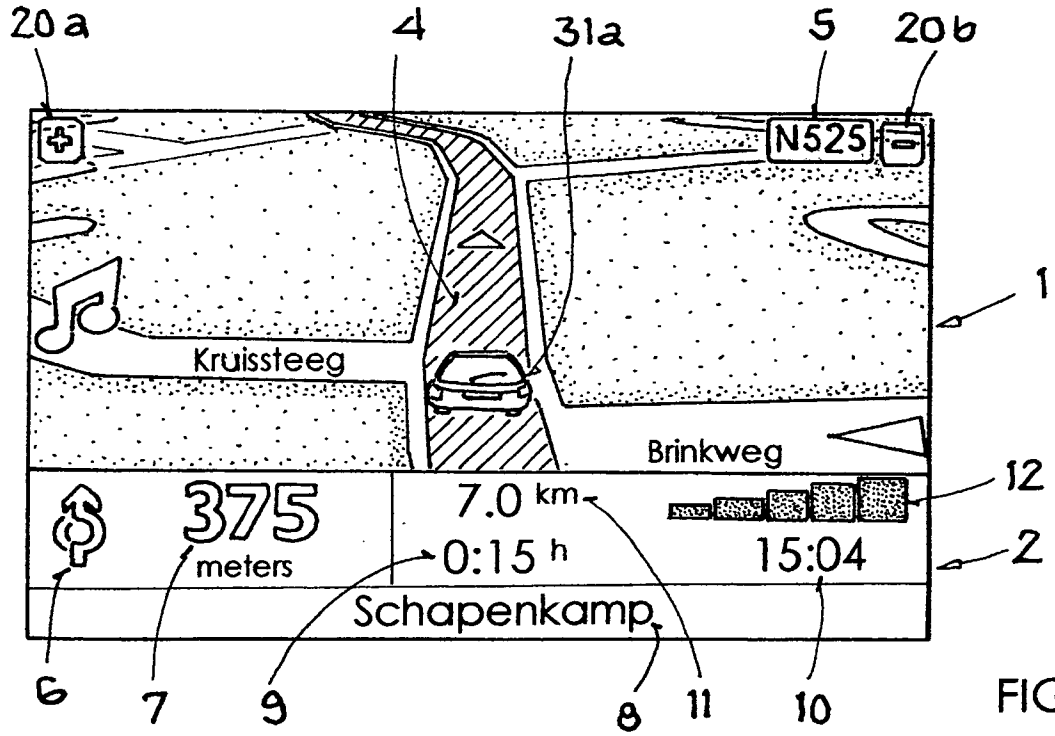
20a
4
31a
5
20b
N525
1
Kruissteeg
Brinkweg
12
375
meters
7.0 km
0:15 h
15:04
2
Schapenkamp
6
7
9
8
11
10

FIG. 3

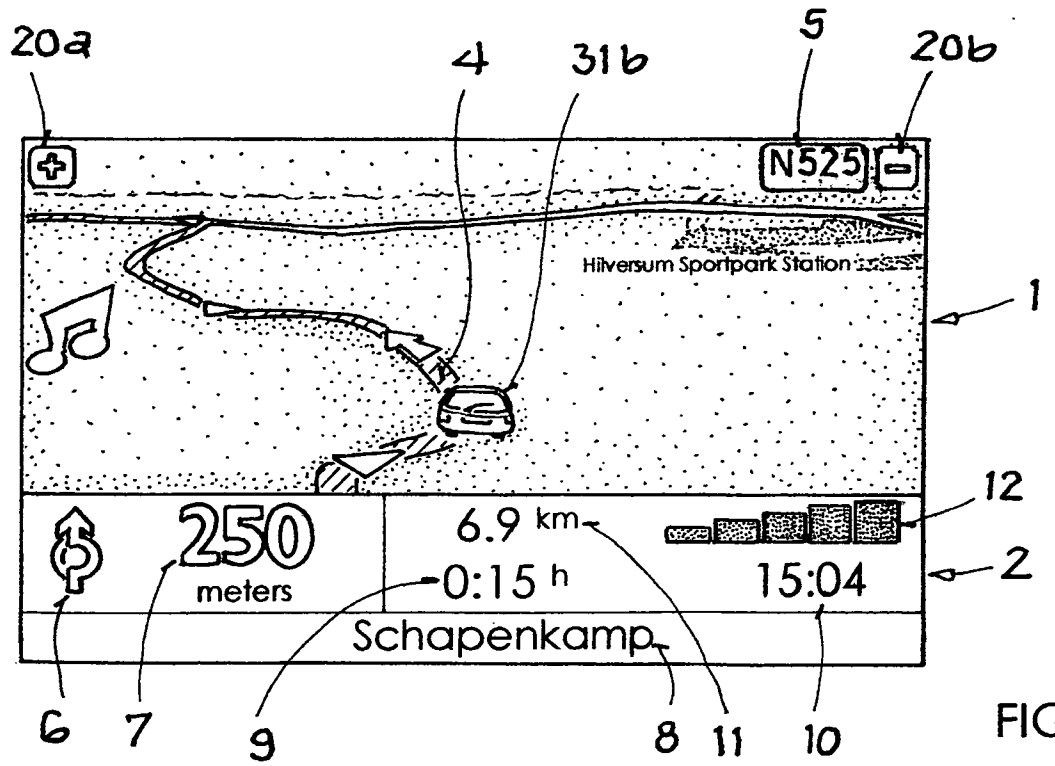
20a
4
31b
5
20b
N525
Hilversum Sportpark Station
1
12
250
meters
6.9 km
0:15 h
15:04
2
Schapenkamp
6
7
9
8
11
10

FIG. 4

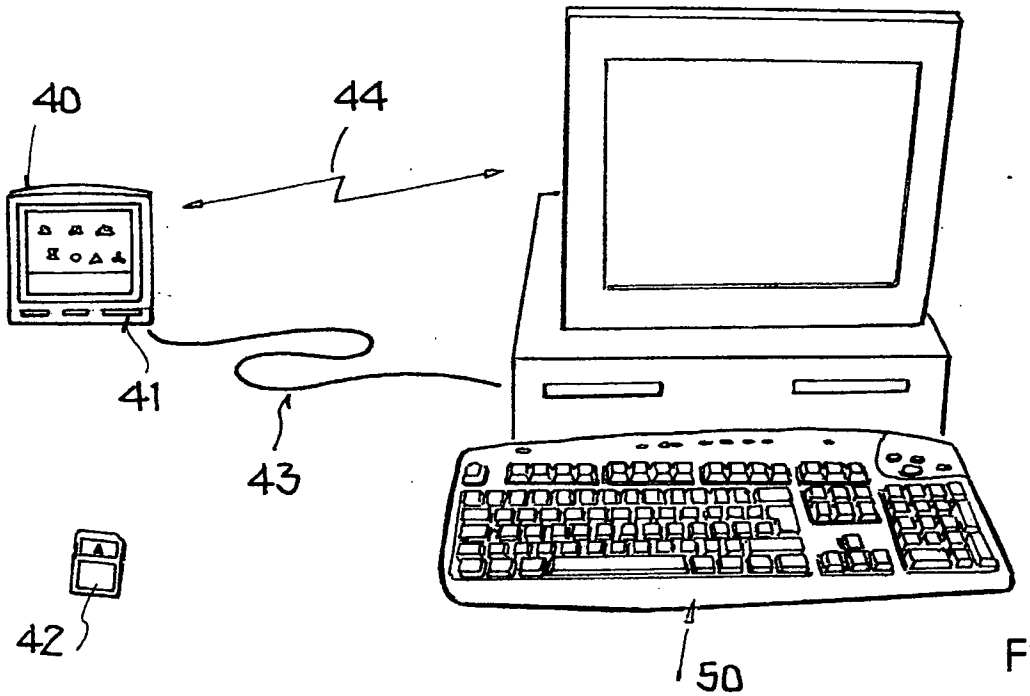

FIG. 5

INTERNATIONAL SEARCH REPORT

International application No
PCT/EP2007/008722

A. CLASSIFICATION OF SUBJECT MATTER
INV. G01C21/36

According to International Patent Classification (IPC) or to both national classification and IPC

B. FIELDS SEARCHED

Minimum documentation searched (classification system followed by classification symbols)
G01C G08G

Documentation searched other than minimum documentation to the extent that such documents are included in the fields searched

Electronic data base consulted during the international search (name of data base and, where practical, search terms used)
EPO-Internal, WPI Data

C. DOCUMENTS CONSIDERED TO BE RELEVANT

Category*	Citation of document, with indication, where appropriate, of the relevant passages	Relevant to claim No.
X	US 2003/201914 A1 (FUJIWARA TOSHIO [JP] ET AL) 30 October 2003 (2003-10-30) page 2, paragraph 35 - page 3, paragraph 52 page 5, paragraph 82 - page 7, paragraph 97; figures 1-8,16,19,20	1-11
A	US 2004/171391 A1 (MURAMATSU TOSHIHIKO [JP]) 2 September 2004 (2004-09-02) page 1, paragraph 9 - page 2, paragraph 35 page 4, paragraph 81 - page 6, paragraph 113; figures 1,5,9,10	1-11
A	US 2006/058952 A1 (COOPER CLIVE W [US] ET AL) 16 March 2006 (2006-03-16) page 4, paragraph 61 - page 5, paragraph 66; claims 1,3,7,10-16; figures 1,2,6	1-11

-/--

[X] Further documents are listed in the continuation of Box C.

[X] See patent family annex.

* Special categories of cited documents :

"A" document defining the general state of the art which is not considered to be of particular relevance

"E" earlier document but published on or after the international filing date

"L" document which may throw doubts on priority claim(s) or which is cited to establish the publication date of another citation or other special reason (as specified)

"O" document referring to an oral disclosure, use, exhibition or other means

"P" document published prior to the international filing date but later than the priority date claimed

"T" later document published after the international filing date or priority date and not in conflict with the application but cited to understand the principle or theory underlying the invention

"X" document of particular relevance; the claimed invention cannot be considered novel or cannot be considered to involve an inventive step when the document is taken alone

"Y" document of particular relevance; the claimed invention cannot be considered to involve an inventive step when the document is combined with one or more other such documents, such combination being obvious to a person skilled in the art.

"&" document member of the same patent family

Date of the actual completion of the international search	Date of mailing of the international search report
6 March 2008	20/03/2008

Name and mailing address of the ISA/	Authorized officer
European Patent Office, P.B. 5818 Patentlaan 2 NL – 2280 HV Rijswijk Tel. (+31-70) 340-2040, Tx. 31 651 epo nl, Fax: (+31-70) 340-3016	Springer, Oliver

INTERNATIONAL SEARCH REPORT

International application No
PCT/EP2007/008722

C(Continuation). DOCUMENTS CONSIDERED TO BE RELEVANT

Category*	Citation of document, with indication, where appropriate, of the relevant passages	Relevant to claim No.
A	US 2006/022846 A1 (TUMMALA PAVANI [US]) 2 February 2006 (2006-02-02) page 4, paragraph 41 - page 5, paragraph 61; figures 1,2,6	1-11

INTERNATIONAL SEARCH REPORT

Information on patent family members

International application No
PCT/EP2007/008722

Patent document cited in search report	Publication date	Patent family member(s)	Publication date
US 2003201914 A1	30-10-2003	US 2004012506 A1	22-01-2004
US 2004171391 A1	02-09-2004	JP 2004251694 A	09-09-2004
US 2006058952 A1	16-03-2006	NONE	
US 2006022846 A1	02-02-2006	NONE	