US 20020054119A1

(19) United States

(12) Patent Application Publication (10) Pub. No.: US 2002/0054119 A1

DOW et al. (43) Pub. Date: May 9, 2002

(54) APPLIANCE AND METHOD OF USING SAME HAVING A SEND CAPABILITY FOR STORED DATA

(76) Inventors: JAMES C. DOW, FORT COLLINS, CO (US); DAN L. DALTON, GREELEY, CO (US); MICHAEL L. RUDD, FORT COLLINS, CO (US); KARIN C. RUFFATTO, FORT COLLINS, CO (US); KEVIN N. SMITH, FORT COLLINS, CO (US); DANIEL FORMOSA, MONTVALE, NJ (US); SANDRA NIEVES, NEW YORK, NY (US); PAUL HAMBURGER, NEW YORK, NY (US); MICHAEL J. DEVRIES, LOVELAND, CO (US); NANCY SHEPARD, ARVADA, CO (US)

Correspondence Address:
HEWLETT PACKARD COMPANY
P O BOX 272400, 3404 E. HARMONY ROAD
INTELLECTUAL PROPERTY ADMINISTRATION
FORT COLLINS, CO 80527-2400 (US)

(*) Notice: This is a publication of a continued prosecution application (CPA) filed under 37 CFR 1.53(d).

(21) Appl. No.: 09/130,869

(22) Filed: Aug. 7, 1998

Publication Classification

(51) Int. Cl.[7] G09G 5/00

(52) U.S. Cl. 345/772

(57) ABSTRACT

A hand-held image capture and communication appliance and method of using same are provided wherein images may be captured and saved in an internal memory. The appliance includes a processor for manipulating and exhibiting the images on a built-in display screen. Program code stored in the internal memory includes a send page or image module that allows the user to transfer data stored in the device to another appliance, device or system. The send page module controlling the transfer of data to another device includes code segments for establishing a communication link over a first communication port with the target device, monitoring the status of the link while the transfer is in progress, and displaying an animation on the display screen that graphically portrays the transfer of image data to the target device. According to another aspect of the appliance, the send page module includes code segments for attempting an image transfer over one or more alternative communication ports if the transfer over the first communication port was unsuccessful.

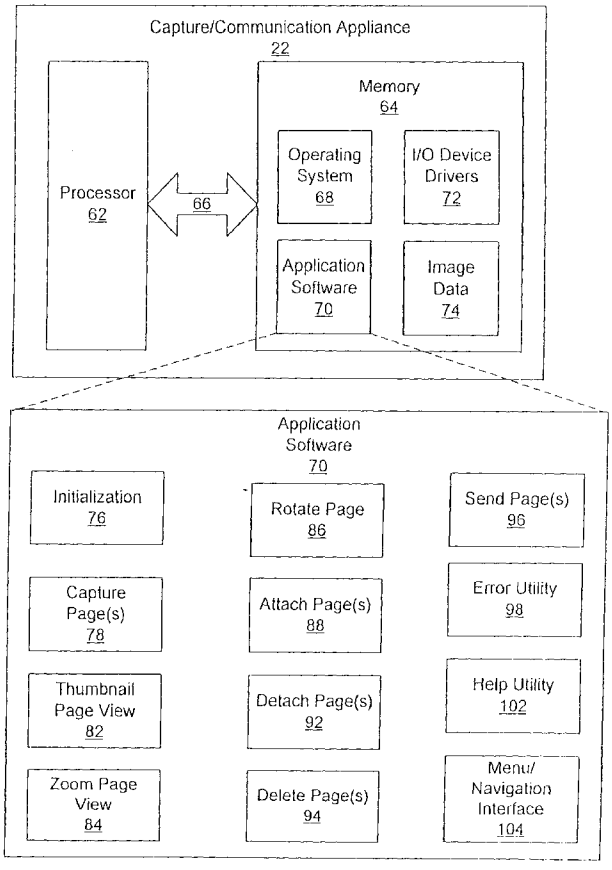

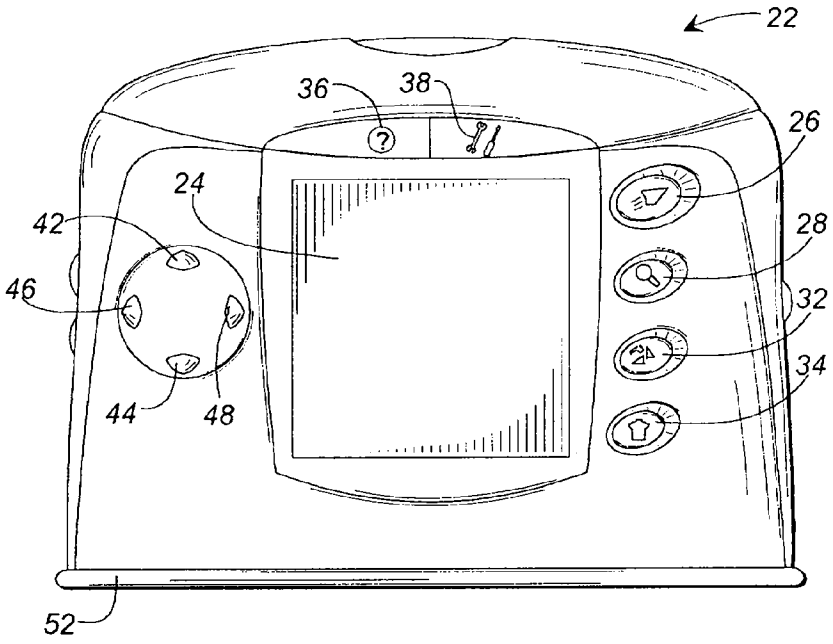

FIG. 1A

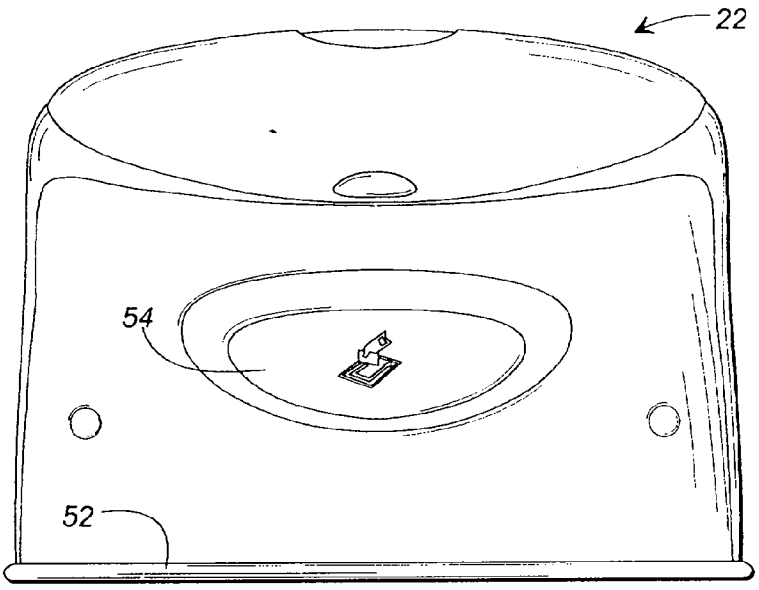

FIG. 1B

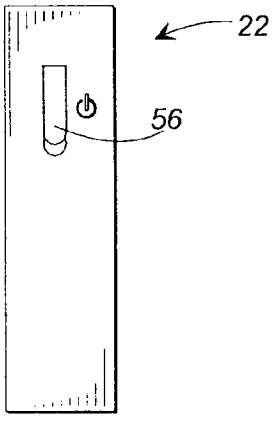

FIG. 1C

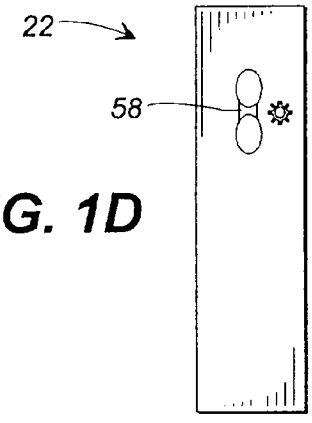

FIG. 1D

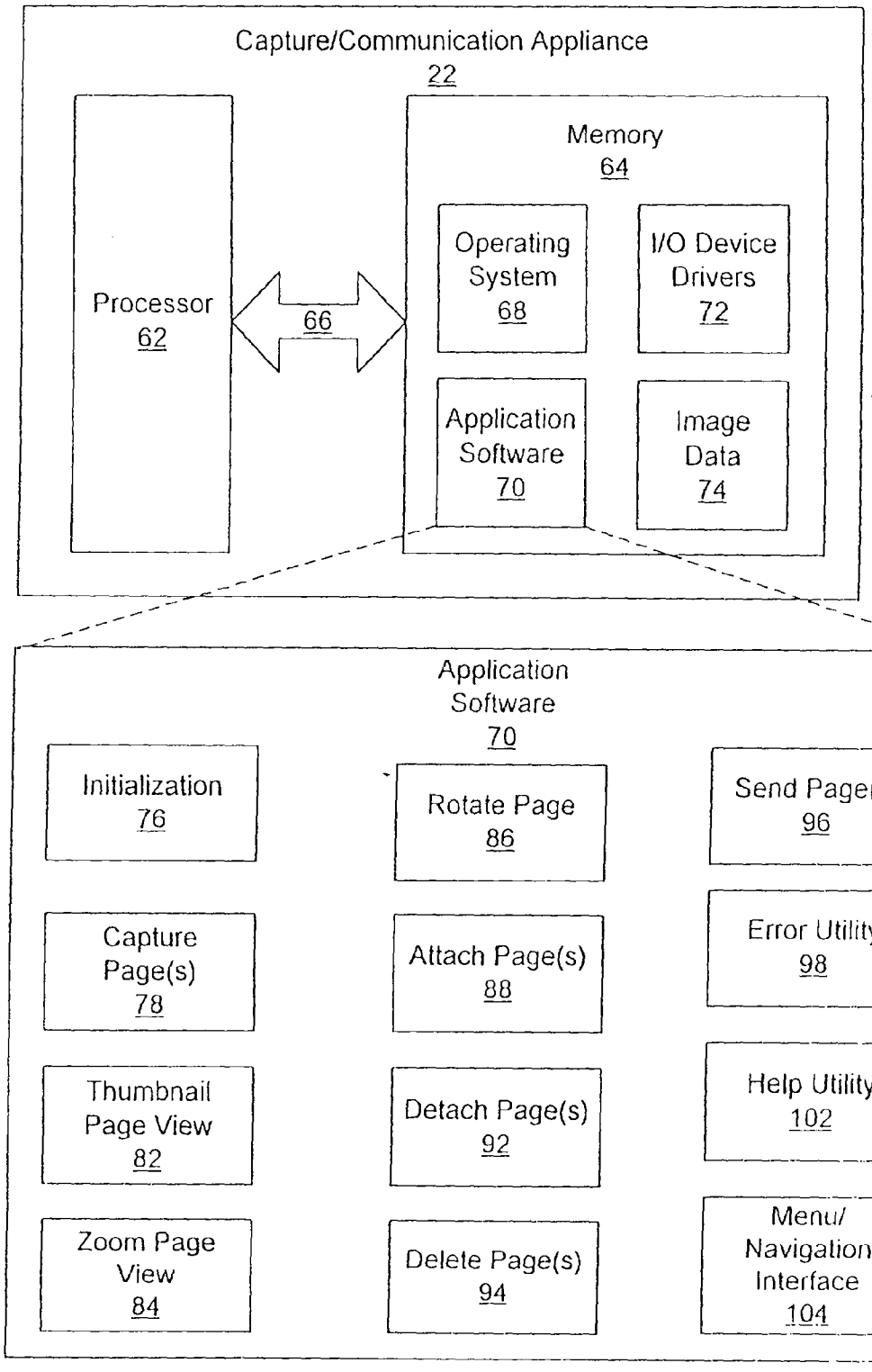
Capture/Communication Appliance
22
Processor
62
66
Memory
64
Operating System
68
I/O Device Drivers
72
Application Software
70
Image Data
74
Application Software
70
Initialization
76
Rotate Page
86
Send Page(s)
96
Capture Page(s)
78
Attach Page(s)
88
Error Utility
98
Thumbnail Page View
82
Detach Page(s)
92
Help Utility
102
Zoom Page View
84
Delete Page(s)
94
Menu/ Navigation Interface
104

FIG. 2

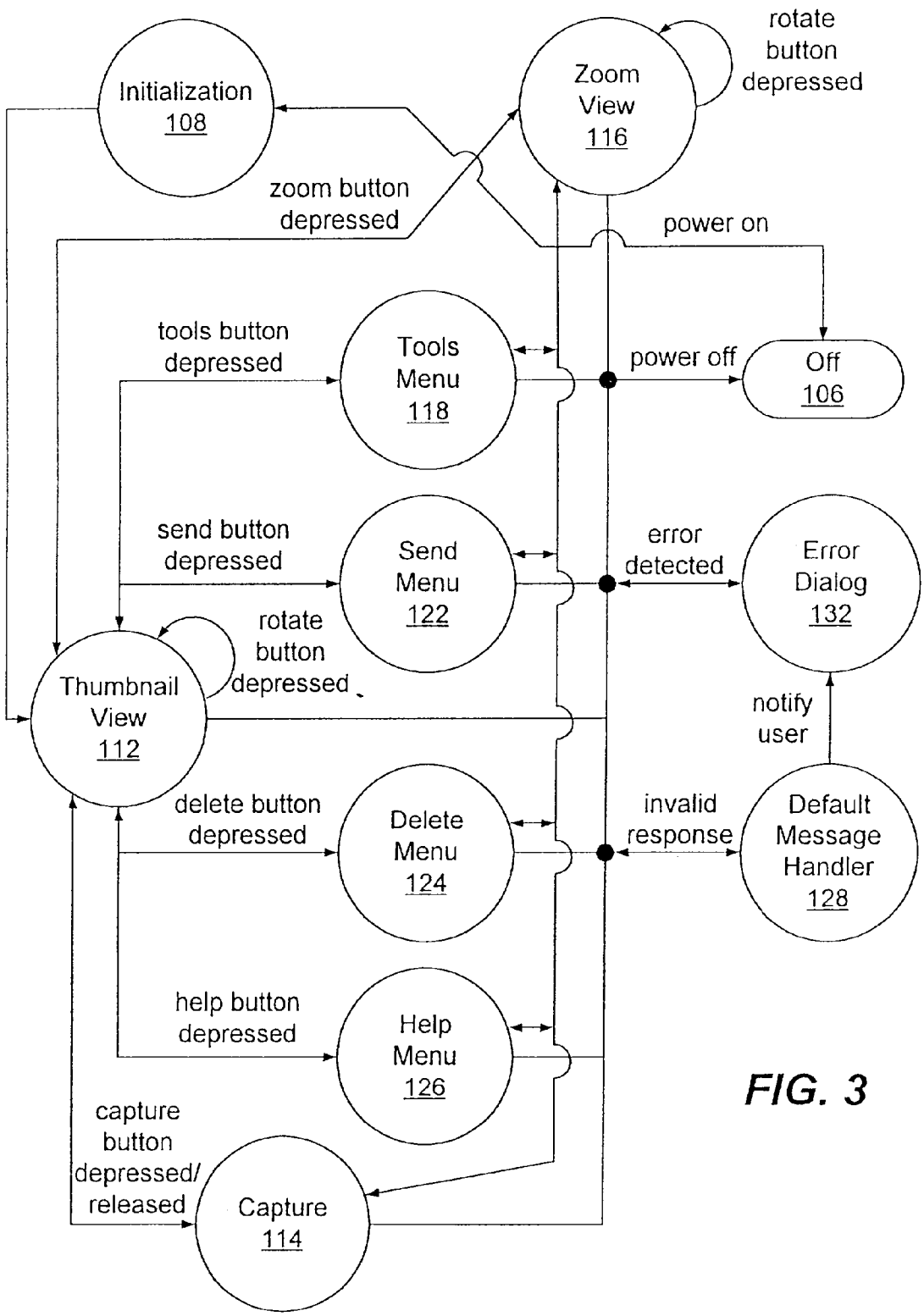
Initialization
108
Zoom
View
116
rotate
button
depressed
zoom button
depressed
power on
tools button
depressed
Tools
Menu
118
power off
Off
106
send button
depressed
Send
Menu
122
error
detected
Error
Dialog
132
rotate
button
depressed
Thumbnail
View
112
notify
user
delete button
depressed
Delete
Menu
124
invalid
response
Default
Message
Handler
128
help button
depressed
Help
Menu
126
capture
button
depressed/
released
Capture
114

FIG. 3

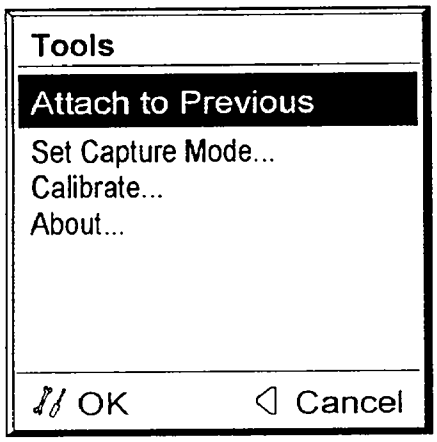

FIG. 4A

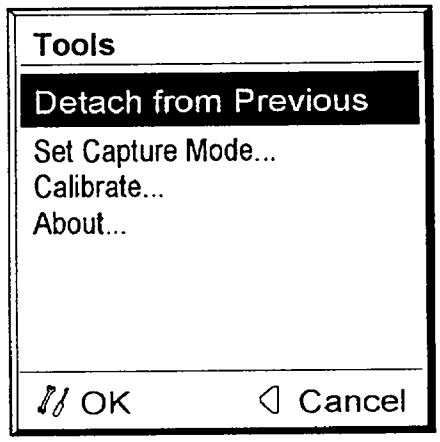

FIG. 4B

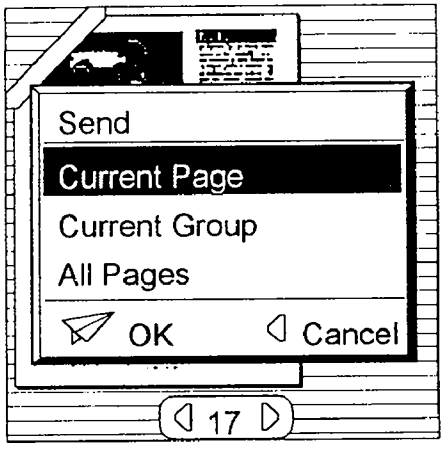

FIG. 5

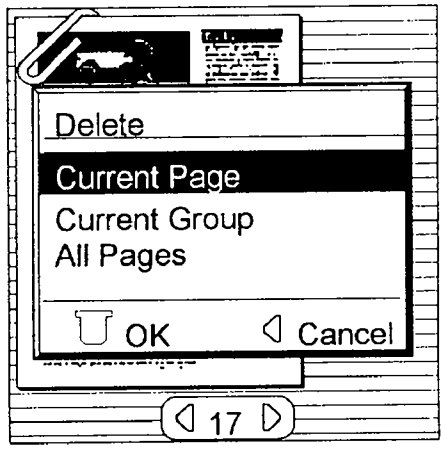

FIG. 6

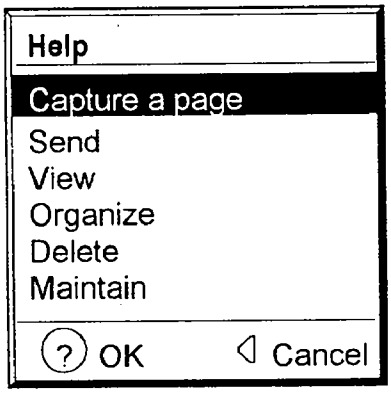

FIG. 7

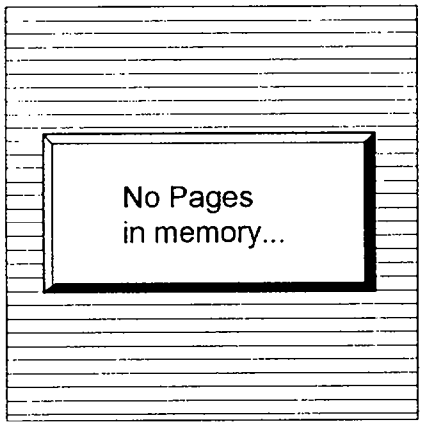

FIG. 8A

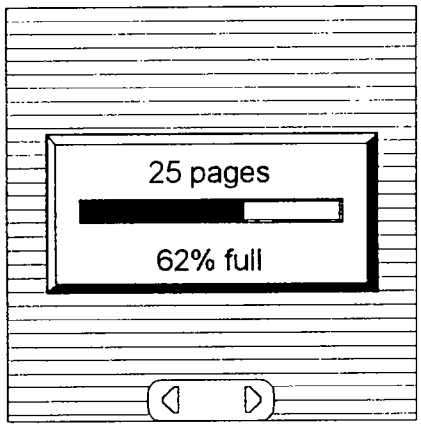

FIG. 8B

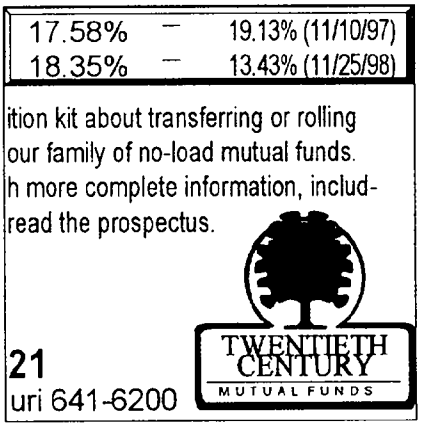

FIG. 8D



FIG. 8C

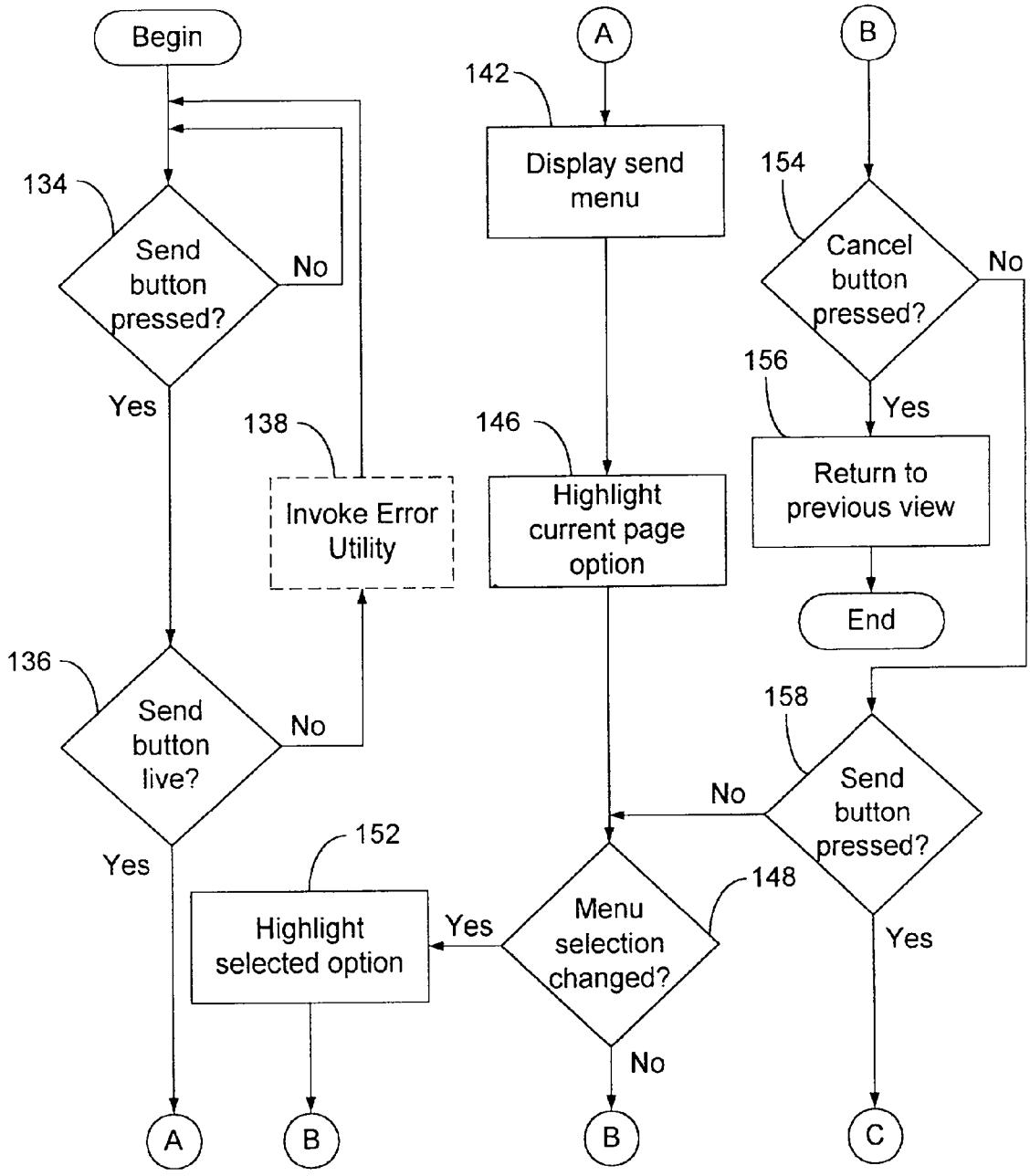
Begin
134
Send button pressed?
No
Yes
138
Invoke Error Utility
136
Send button live?
No
Yes
152
Highlight selected option
A
B
A
142
Display send menu
146
Highlight current page option
Menu selection changed?
148
Yes
No
B
B
154
Cancel button pressed?
No
156
Yes
Return to previous view
End
158
Send button pressed?
No
Yes
C

Fig. 9A

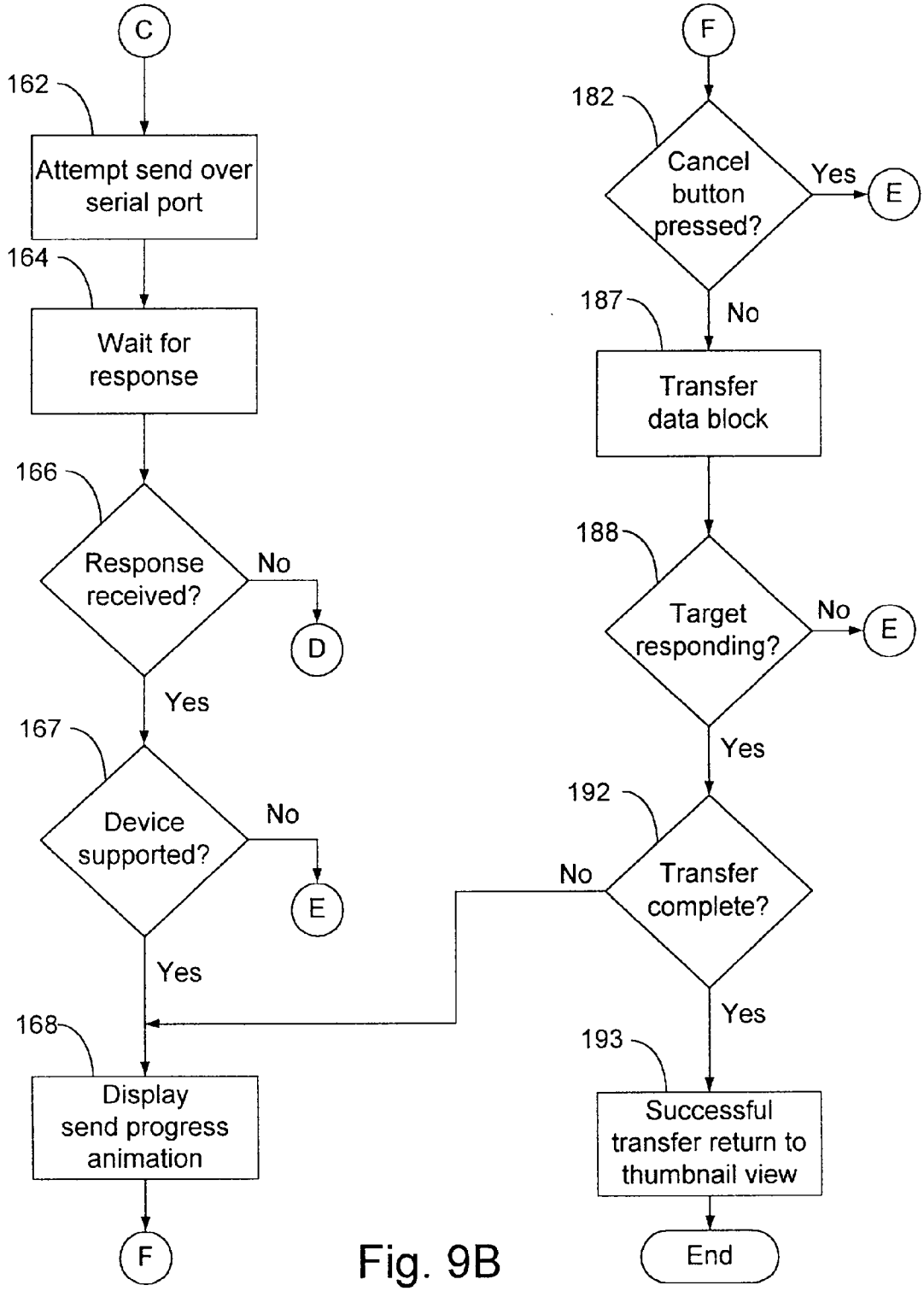
C
162
Attempt send over serial port
164
Wait for response
166
Response received?
No
D
Yes
167
Device supported?
No
E
Yes
168
Display send progress animation
F
F
182
Cancel button pressed?
Yes
E
No
187
Transfer data block
188
Target responding?
No
E
Yes
192
Transfer complete?
No
Yes
193
Successful transfer return to thumbnail view
End

Fig. 9B

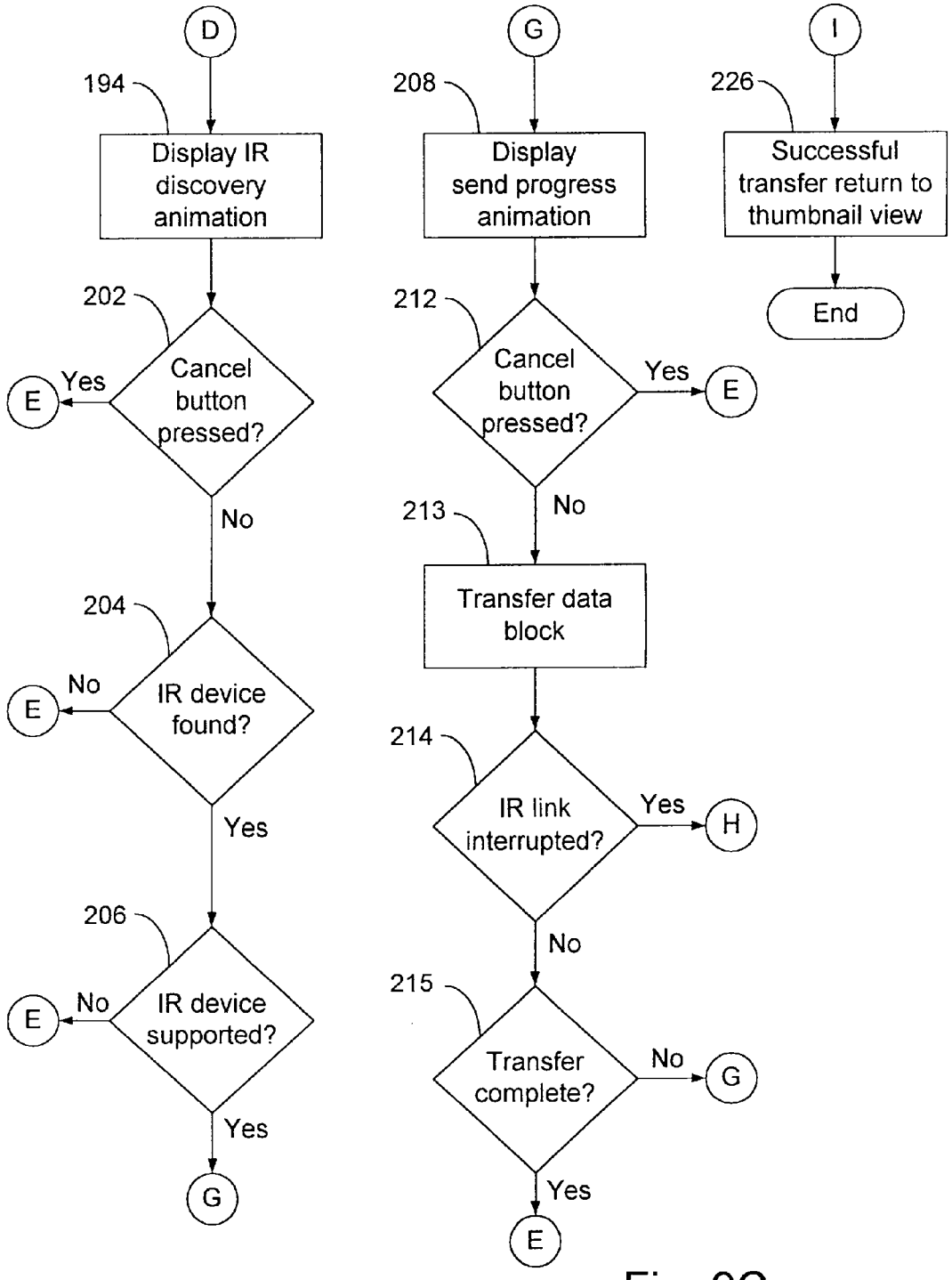
D
194
Display IR discovery animation
202
Cancel button pressed?
Yes
E
No
204
IR device found?
No
E
Yes
206
IR device supported?
No
E
Yes
G
G
208
Display send progress animation
212
Cancel button pressed?
Yes
E
No
213
Transfer data block
214
IR link interrupted?
Yes
H
No
215
Transfer complete?
No
G
Yes
E
I
226
Successful transfer return to thumbnail view
End

Fig. 9C

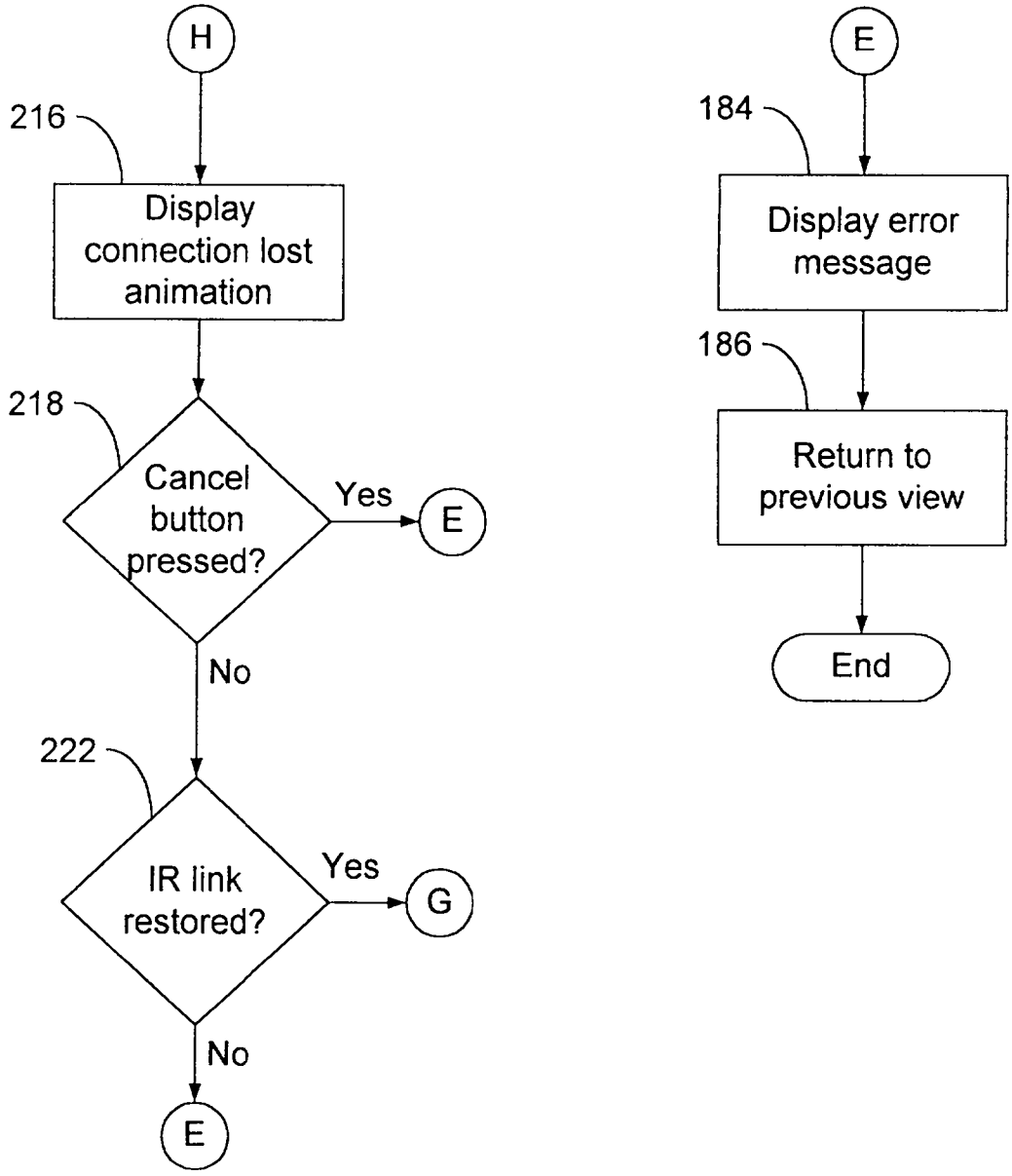
H
216
Display connection lost animation
218
Cancel button pressed?
Yes
E
No
222
IR link restored?
Yes
G
No
E
E
184
Display error message
186
Return to previous view
End

Fig. 9D

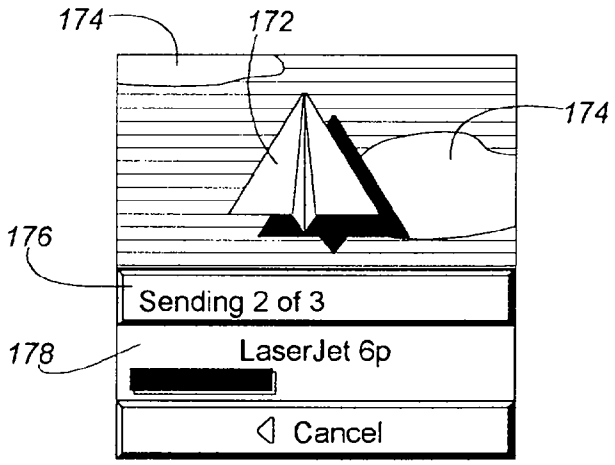

FIG. 10

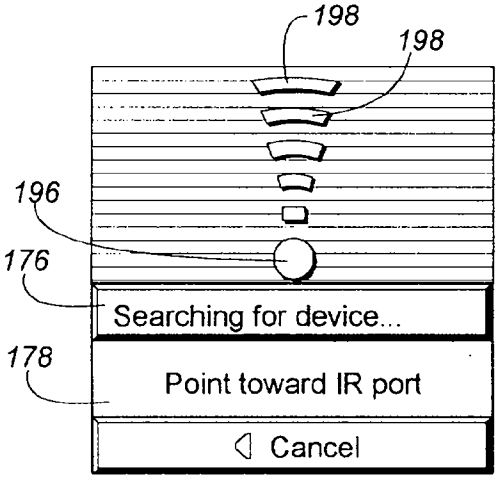

FIG. 11

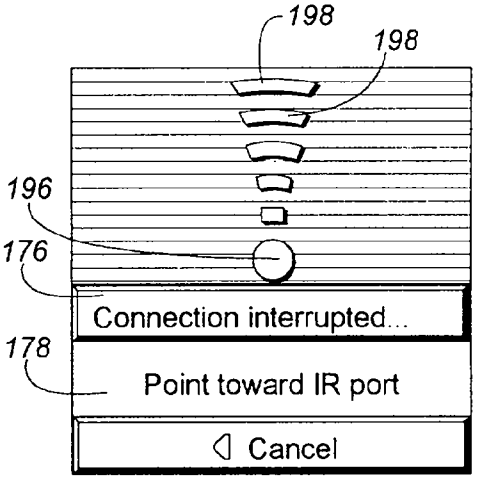

FIG. 12

APPLIANCE AND METHOD OF USING SAME HAVING A SEND CAPABILITY FOR STORED DATA

CROSS REFERENCE TO RELATED APPLICATIONS

[0001] This application is related to U.S. application entitled "APPLIANCE AND METHOD OF USING SAME HAVING A USER HELP CAPABILITY" (Docket No. 10980471), U.S. application entitled "APPLIANCE AND METHOD OF USING SAME FOR CAPTURING IMAGES" (Docket No. 10980472), U.S. application entitled "APPLIANCE AND METHOD OF USING SAME HAVING A DELETE CAPABILITY FOR SAVED DATA" (Docket No. 10980473), U.S. application entitled "APPLIANCE AND METHOD OF USING SAME HAVING A CAPABILITY TO GRAPHICALLY ASSOCIATE AND DISASSOCIATE DATA WITH AND FROM ONE ANOTHER" (Docket No. 10980474), U.S. application entitled "APPLIANCE AND METHOD FOR COMMUNICATING AND VIEWING MULTIPLE CAPTURED IMAGES" (Docket No. 10980475), U.S. application entitled "APPLIANCE AND METHOD FOR NAVIGATING AMONG MULTIPLE CAPTURED IMAGES AND FUNCTIONAL MENUS" (Docket No. 10980476), U.S. application entitled "APPLIANCE AND METHOD FOR CAPTURING IMAGES HAVING A USER ERROR INTERFACE" (Docket No. 10980477), U.S. application entitled "APPLIANCE AND METHOD FOR VIEWING CAPTURED IMAGES" (Docket No. 10980481), and U.S. application entitled "APPLIANCE AND METHOD FOR MENU NAVIGATION" (Docket No. 10980483), which are filed contemporaneously herewith and are incorporated herein by reference.

BACKGROUND OF THE INVENTION

[0002] The present invention relates generally to the field of graphical user interfaces and, more particularly, to a portable hand-held appliance for capturing images through digital scanning and has a graphical user interface for displaying the captured images for user manipulation and processing, and communicating those images to another device or appliance.

[0003] Intangible information is a vital business asset that can be exploited for competitive advantage if managed properly. In the past fifteen years, improvements in information processing have been achieved primarily from the widespread use of microcomputers in the workplace and their application in local and wide area networks. Through such applications as electronic mail (email) and networked access to document storage servers, the electronic communications market has exploded. Nevertheless, business is still far from reaching a "paperless" workplace. For example, according to a 1993 report by BIS Strategic Decisions (hereinafter BIS), an information technology consulting firm, more than 90 billion documents were created in 1992 and more than 1 trillion copies of those documents were made. Moreover, BIS estimated that printing and copying expenses average between 6% and 13% of a typical company's revenue. These statistics illustrate the economic savings available for those businesses that are able to merge paper and technology in a unified information processing strategy.

[0004] One tool that has proven useful for translating between paper and electronic information is the digital scanner. Scanner-enabled document distribution endows paper-based documents with the speed and convenience of electronic communications. A desktop scanner or network scanner allows business professionals to scan paper-based documents, manage them effectively and distribute them in a timely fashion. Users can share and distribute information easily by scanning directly to their email or PC fax applications. The growing popularity of fax modems and email is driving the acceptance of scanner-enabled document distribution in offices of all sizes. Fax/modem capabilities, which are available with virtually all modern PCs, enable users to send and receive faxes directly from a computer—at their desk or while traveling—and to check email remotely.

[0005] Nevertheless, while scanners are ideal for users who need to disseminate paper-based information to colleagues through PC facsimile and/or email, traditional flatbed scanners lack the convenience and flexibility that users have become accustomed to through such products as notebook computers and cellular phones. Hand-held scanners are an improvement in this regard; however, they are typically dependent on a host computer for displaying the scanned images and for providing power. U.S. Pat. No. 5,550,938 to Hayakawa et al. (hereinafter Hayakawa) discloses a portable image scanner designed to overcome these disadvantages. Specifically, Hayakawa discloses a hand-held cordless image scanner having a display/control screen, a memory for storing scanned images, a self contained power supply and an interface that allows the scanner to be received by a host computer as a memory card for transferring stored images from the scanner to the computer. While Hayakawa's scanner is effective in breaking the dependency on a host computer for image display and power, it still has several drawbacks. For example, Hayakawa's scanner offers no image processing features other than the capabilities of storing or discarding a newly scanned image and reviewing those images that have been stored previously. More advanced image processing would necessarily be done after transfer to a host computer. Moreover, Hayakawa does not offer a graphical user interface (GUI) containing icons and/or animations to assist users in operating their device. Finally, transfer of images is limited to those devices having ports for receiving an external memory card or the capability of reading the scanner memory through a memory card drive.

[0006] Accordingly, what is sought is a portable, hand-held image capturing device that allows users to process or manipulate captured images in the device and the ability to communicate the images directly to some other unit such as a computer, printer, or facsimile machine. In addition, the image capturing device should provide cordless operation and use a standard interface for transferring images to other devices. A GUI is preferred to assist users, particularly novices, in operating the device.

SUMMARY OF THE INVENTION

[0007] Certain objects, advantages, and novel features of the invention will be set forth in the description that follows and will become apparent to those skilled in the art upon examination of the following or may be learned with the practice of the invention.

[0008] To achieve the advantages and novel features, the present invention is generally directed to a portable hand-

held image capture and communication appliance and method of using same by which images may be captured via capturing means and saved in an internal memory. The appliance includes a processor for manipulating and exhibiting the images on a built-in display screen. Program code stored in the internal memory includes a send page or image module that allows the user to transfer or receive image data to or from another appliance, device or system.

[0009] According to an aspect of the invention, the program code includes a menu/navigation module that provides the user with a list of possible actions and processes responses thereto.

[0010] The send page module controlling the transfer of image data to another device includes code segments for establishing a communication link over a first communication port with the target device, monitoring the status of the link while the transfer is in progress, and displaying an animation on the display screen that graphically portrays the transfer of image data to the target device. In the preferred embodiment, this animation shows a paper airplane appearing to move through clouds.

[0011] According to another aspect of the invention, the send page module includes code segments for attempting an image transfer over one or more alternative communication ports if the transfer over the first communication port was unsuccessful. In the preferred embodiment, transfers are attempted first over the appliance's serial port and second over the appliance's infra red (IR) port. The send page module controls establishment of a communication link over the second communication port. During this link setup or discovery interval, an animation is displayed that symbolizes the appliance connecting with the target device. In the preferred embodiment, the communication link establishment animation shows a tower emanating waves to simulate a radar or sonar system. While the image transfer is in progress, the aforementioned transfer animation is displayed. The send page module monitors the status of the link to detect an interruption in communication. Should the link go down, the communication link establishment animation is displayed to notify the user that the link needs to be established again. A status bar on the display is updated with a message explaining that the communication link has been dropped to distinguish the interruption animation from an initial link setup.

[0012] The appliance according to the present invention has many advantages, a few of which are highlighted hereafter, as examples.

[0013] One advantage of the invention is that intelligent image processing features, normally reserved for a traditional computer, are provided in a portable, hand-held image capturing appliance.

[0014] Another advantage of the invention, is that captured images can be transferred to another appliance, device, or system for further processing. This is particularly useful when the other device is a printer so that paper copies of the images can be obtained.

[0015] Still another advantage of the invention is that the appliance can transfer images over multiple communication ports, which in the preferred embodiment comprise a serial port and an IR port.

[0016] A further advantage of the invention is that the appliance automatically selects which communication port to use without requiring input from the user, which makes the appliance easier to operate.

[0017] Yet another advantage of the invention is that a GUI is provided, including metaphoric icons and animations, that allows new users to operate the appliance with minimal training or assistance.

BRIEF DESCRIPTION OF THE SEVERAL VIEWS OF THE DRAWINGS

[0018] Other features of the present invention will be more readily understood from the following detailed description of specific embodiments thereof when read in conjunction with the accompanying drawings, in which:

[0019] **FIG. 1A** is an elevation view of the hand-held image capture and communication appliance according to the present invention, which depicts a side of the unit containing the display screen, operation buttons, and navigation buttons;

[0020] **FIG. 1B** is an elevation view of the appliance of **FIG. 1A** depicting the opposing side to that illustrated in **FIG. 1**A, which contains the capture button for performing an image capture;

[0021] **FIG. 1C** is an elevation view of the appliance of **FIGS. 1A and 1B** depicting an end of the unit, which contains the power switch;

[0022] **FIG. 1D** is an elevation view of the appliance of **FIGS. 1A, 1B**, and 1C depicting the opposing end to that illustrated in **FIG. 1**C, which contains a brightness button for adjusting the visual clarity of the display screen;

[0023] **FIG. 2** is a high-level block diagram of the internal hardware and software architecture of the appliance illustrated in FIGS. 1A-ID;

[0024] **FIG. 3** is a high-level state diagram of the application software of **FIG. 2**;

[0025] **FIGS. 4A and 4B** illustrate the tools menus displayed on the display screen of **FIG. 1A**;

[0026] **FIG. 5** illustrates the send menu displayed on the display screen of **FIG. 1A**;

[0027] **FIG. 6** illustrates the delete menu displayed on the display screen of **FIG. 1A**;

[0028] **FIG. 7** illustrates the help menu displayed on the display screen of **FIG. 1A**;

[0029] **FIGS. 8A and 8B** depict memory usage indicator icons on the display screen of **FIG. 1A** that provide a memory utilization report for the appliance;

[0030] **FIG. 8C** illustrates a thumbnail view of a captured image on the display screen of **FIG. 1A**;

[0031] **FIG. 8D** illustrates a zoom view of a captured image on the display screen of **FIG. 1A, FIGS. 9A, 9B, 9**C, and 9D are a flow chart describing the operation of the send page software module of **FIG. 2**;

[0032] **FIG. 10** illustrates a scene from the send progress animation on the display screen of **FIG. 1A**;

[0033] **FIG. 11** illustrates a scene from the IR port discovery animation on the display screen of **FIG. 1A**; and

[0034] **FIG. 12** illustrates a scene from the connection interrupted animation on the display screen of **FIG. 1A**.

DETAILED DESCRIPTION OF THE PREFERRED EMBODIMENT

[0035] While the invention is susceptible to various modifications and alternative forms, a specific embodiment thereof is shown by way of example in the drawings and will herein be described in detail. It should be understood, however, that there is no intent to limit the invention to the particular form disclosed, but on the contrary, the invention is to cover all modifications, equivalents, and alternatives falling within the spirit and scope of the invention as defined by the claims.

[0036] Architecture of the Image Capture and Communication Appliance

[0037] A portable, hand-held, image capture and communication appliance **22** embodying the principles of the present invention is shown in FIGS. 1A through ID Specifically, **FIG. 1A** depicts one side (i.e., front) of appliance **22** where a flat-panel display **24** along with user operation buttons **26, 28, 32, 34, 36, 38** and user navigation buttons **42, 44, 46, 48** are located. Display **24** is preferably of the flat-panel variety to accommodate the hand size dimensions of appliance **22**. Common types of flat-panel displays suitable for use in the present invention include electroluminescent displays, gas plasma discharge displays, and liquid crystal displays (LCDs). Display **24** is the means by which information, including captured images, text, icons, and animations, is communicated to the user. As used herein, the term "image" encompasses both text (binary) and color, graphic, or grayscale visuals. The user operation buttons comprise an image send or transmit button **26**, an image zoom button **28**, an image rotate button **32**, an image delete button **34**, a help utility button **36** and a tools menu button **38**. Send, zoom, rotate, and delete buttons **26, 28, 32** and **34** allow the user to electronically manipulate an image or page that has been captured into memory through photoelement array **52**. Note that an image captured in memory is interchangeably referred to herein as a "page" because the image is portrayed in appliance **22** as a physical page of text and/or imagery. Activation of tools button **38** presents the user with a menu that includes possible image operations (e.g., image attachment/grouping, image detachment/ungrouping), changing the mode of appliance **22** (i.e., toggling between text (binary) capture and color, graphic, or grayscale capture modes), calibrating appliance **22**, displaying a screen identifying important specifications such as a model number, hardware or software release number, memory equipage, etc., or other user utilities not deserving of a dedicated external button for activation. Help button **36** provides the user with access to general tutorials, process animations, how-to instructions on the operation of appliance **22**, and context sensitive instruction when help is requested while another operation or menu is active. The navigation buttons include an up button **42**, a down button **44**, a left button **46**, and a right button **48** and are controlled by the user to steer a course through menu items and to view images or pages that have been captured in memory.

[0038] **FIG. 1B** shows the side of appliance **22** opposite that illustrated in **FIG. 1A** (i.e., back). The back side of appliance **22** includes image capture button **54**, which is depressed by a user to capture an image through photoelement array **52** and is released once the image is captured. A power switch **56** is included at one end of appliance **22** as shown in **FIG. 1C and a** brightness control **58** for display **24** is located at the other end of appliance **22** as shown in **FIG. 1D**. The positioning of the various buttons, power switch **56**, and brightness control **58** on appliance **22** as shown in **FIGS. 1A through 1D** is merely exemplary and can be modified as needed to satisfy the ergonomic requirements of the targeted user community.

[0039] Referring now to **FIG. 2**, the internal architecture of appliance **22** will be described hereafter. Appliance **22** includes a processor **62**, which communicates with a memory **64** via address/data bus **66**. Processor **62** can be any commercially available or custom microprocessor suitable for an embedded application. Memory **64** is representative of the overall hierarchy of memory devices containing the software and data used to implement the functionality of appliance **22**. Memory **64** can include, but is not limited to, the following types of devices: cache, ROM, PROM, EPROM, EEPROM, flash, SRAM, and DRAM. As shown in **FIG. 2**, memory **64** holds four major categories of software and data used in appliance **22**: the operating system **68**; the application software **70**; the I/O device drivers **72**; and the image data **74** generated for each capture. Operating system **68** should be designed for real time embedded applications and, preferably, is relatively compact to make the most efficient use of memory **64**. One such example of a real time operating system meeting these criteria is the PSOSYSTEM operating system (pSOSystem® or pSOS®) sold by Integrated Systems, Inc., 3260 Jay Street, Santa Clara, Calif. 95054-3309, which is used in the preferred embodiment of the present invention. I/O device drivers **72** include software routines accessed through operating system **66** by application software **70** to communicate with devices such as display **24**, certain memory components **64** and I/O ports such as a serial port or IR port for transferring data to another appliance, device or system. The digital representations of the images captured by appliance **22** is denoted by image data **74**. The format used for storing the images should be compatible with application software **70**. One common format used for encoding images is the CCITT standard, which is used in the preferred embodiment of the present invention; however, other public or proprietary standards can be used with equal success. For example, JPEG is a common standard used to encode graphic or color images. Finally, application software **70** comprises the control programs that implement the various features of appliance **22**. Application software **70** and devices drivers **72** are typically written in a high-level programming language such as C or C++ for development convenience. Nevertheless, some drivers or application modules are sometimes written in assembly or machine language to optimize speed, memory usage or layout of the software in memory. In the preferred embodiment, the present invention uses C language to implement most application software **70** and device drivers **72**. Assembly language is used to implement time-critical code segments.

[0040] Application software **70** can be broken into several modules corresponding to the various features of appliance **22**, as shown in **FIG. 2**. These software modules include an initialization module **76**, a capture page module **78**, a thumbnail view module **82**, a zoom view module **84**, a page

rotation module **86**, an attach page module **88**, a detach page module **92**, a delete page module **94**, a send page module **96**, an error utility module **98**, a help utility module **102** and a menu/navigation interface module **104**. A brief overview of each of the aforementioned modules follows hereafter.

[**0041**] Initialization module **76** contains the boot software that is invoked when appliance **22** powers up. This module works closely with operating system **68** and device drivers **72** to perform any hardware initialization for processor **62**, memory devices **64**, display **24**, and software initialization for global resources, such as message queues and buffers, system tasks, and memory partitions. Capture page module **78** controls the acquisition of images through photoelement array **52** and their conversion into a suitable format for storage in memory **64**. Thumbnail view module **82** provides the default visual for pages and icons shown on display **24**. For example, **FIGS. 8A and 8B** show a memory usage indicator icon for the cases where memory **64** is empty (i.e., no captured pages in memory) and where memory **64** holds **25** captured pages. In **FIG. 8**C, thumbnail view module **82** presents an entire captured page on display **24**. Zoom view module **84** allows the user to magnify a portion of a page as illustrated in **FIG. 8D**. Page rotation module **86** allows the user to rotate a page either in thumbnail or zoom view in 90° increments. Attach page module **88** allows the user to logically join pages together to form a group of pages that can be manipulated as an individual unit. Conversely, detach page module **92** allows the user to separate a page or pages from a previously formed group. Delete page module **94** allows the user to purge a page or group of pages from memory **64**. Send page module **96** allows the user to transfer a page or group of pages to another appliance, device or system through the serial or IR communication ports of appliance **22**. The operation of send page module **96** will be discussed in detail hereinafter. Error utility module **98** provides notification to the user when the user attempts an invalid operation. Help utility module **102** provides the user, in real time, with general instructions through text and animation for operating appliance **22** and context sensitive instructions for performing a specific operation. Lastly, menu/navigation interface module **104** provides the user with graphical menus for performing various operations and processes the user's response thereto. Moreover, menu/navigation interface module **104** responds to navigation buttons **42**, **44**, **46**, and **48** that allow the user to steer a course through the graphical menus and view the stored pages.

[**0042**] A high level state diagram for application software **70** is shown in **FIG. 3**. This state diagram is useful for gaining a broad understanding of the operation of application software **70** and its associated software modules. These states are representative of tasks or processes in application software **70** that act on messages from a message queue, which are generated as a result of user interaction with appliance **22** (i.e., activation of buttons). Appliance **22** and application software **70** begin and terminate from the off state **106**, which is controlled by the user through operation of power switch **56**. Off state **106** can clearly be entered from any other state in response to a user turning appliance **22** off through switch **56**. When a user turns switch **56** to the on position, the system will pass through a transient initialization state **108** during which time initialization module **76** is invoked to perform its functions. Once system initialization is complete, the system enters the thumbnail view state **112**, which is the default state for viewing any captured images. From thumbnail view state **112**, the system can transition to any one of several possible states depending on the action by the user. For example, the capture button can be pressed to enter capture state **114** to perform an image capture. After the image is captured, the button is released to return to thumbnail view state **112**. If the user wishes to change the orientation of the captured image, then activation of rotation button **32** will rotate the captured image 90° with each invocation. Moreover, now that an image is captured in memory **64**, a user can obtain a magnified view of a portion of the image or page by pressing zoom button **28** to enter zoom view state **116**. Similar to thumbnail view state **112**, the magnified image can also be rotated through application of rotation button **32**. The system will return to thumbnail view state **112** through operation of zoom button **28**.

[**0043**] From thumbnail view state **112** or zoom view state **116**, one of four menu states can be entered depending on the choice made by the user. First, activation of tools button **38** will transition the system into tools menu state **118** where a menu of possible page operations and/or features is exhibited on display **24** as illustrated in **FIGS. 4A and 4B**. Second, activation of send button **26** will transition the system into send menu state **122** where a menu of options for transferring a page or group of pages to another appliance, device or system is exhibited on display **24** as illustrated in **FIG. 5**. Third, activation of delete button **34** will transition the system into delete menu state **124** where a menu of options for deleting a page or group of pages from memory **64** is exhibited on display **24** as illustrated in **FIG. 6**. Lastly, activation of help button **36** will transition the system into help menu state **126** where a menu of help topics is exhibited on display **24** as illustrated in **FIG. 7**. Once any of the aforementioned menu states is reached, the user can choose a desired menu option by using navigation buttons **42** and **44** and then validating the choice by pressing a confirmation button. In the preferred embodiment of the present invention, the confirmation button is simply the button by which the present menu on display is accessed. An icon indicating the appropriate confirmation button is displayed in the lower left hand side of the menus as illustrated in **FIGS. 4 through 7**. Menu states may be exited by simply invoking navigation button **46** to transition to a previous state.

[**0044**] An invalid response by the user (i.e., user presses an inactive button) will result in a transition to the default message handler state **128** where the user response is interpreted through the message that was generated internally. Frequently, the invalid response by the user will simply be ignored. Nevertheless, depending on the button that was invoked and the current state of application software **70**, a transition is sometimes made to the error dialog state **132** to notify the user of their error via a message or graphic (e.g., a blinking icon) on display **24**. Alternatively, error dialog state **132** can be entered directly if application software **70** detects an error in the execution of a valid operation. The most common example of this is when the user follows an improper capture path with appliance **22** during the image capture process.

[**0045**] The features provided by the send page software module **96** will be described hereafter with frequent reference to (a) the architecture and operation of the application software **70** of **FIG. 2**; (b) the send menu of **FIG. 5**; (c) the

flow charts of **FIGS. 9A, 9B**, and 9C; and (d) the animation scene illustrations of **FIGS. 10, 11**, and **12**.

[**0046**] Operation of the Send Page Feature

[**0047**] The operation of the send page feature is described hereafter by way of example of a transfer of data from appliance **22** to another device or appliance. The send or transfer concepts are equally applicable, however, for receiving or downloading data from another device into appliance **22**. The send or transfer page feature of appliance **22** is exercised through send button **26**, which displays the send menu illustrated in **FIG. 5**. Thus, as represented by decision diamond **134** in **FIG. 9**A, the process begins with menu/navigation interface module **104** (see **FIG. 2**) processing a message indicating that send button **26** has been activated. Depending on the current state of application software **70**, this response may not be valid as indicated by decision diamond **136**. If send button **26** is not currently active or live, error utility software module **98** may optionally be invoked to notify the user that send button **26** is presently inactive in step **138**. If, however, send button **26** is active, the process continues by following termination A where the send menu is exhibited on display **24** (see **FIG. 1A**) in step **142** as shown in **FIG. 5**. The current page option is highlighted as the default action in step **146** as depicted in **FIG. 5**.

[**0048**] Referring now to **FIG. 5**, three send or transmit options are offered to the user: send the current page, send the current group, or send all pages stored in memory **64** (see **FIG. 2**). The first option of sending the current page, which is chosen as the default in the preferred embodiment, allows the user to send or transmit whatever page is currently displayed on display **24** (see **FIG. 1A**). Thus, whether the current page is displayed in thumbnail view (e.g., **FIG. 8C**), is displayed in zoom view (e.g., **FIG. 8D**), is the inner page of a group of pages (e.g., **FIG. 5**) that have been logically joined through attach page module **88** (see **FIG. 2**), or is the first page of a group of pages, that page will be selected for transmission. The second option allows the user to send or transmit the group of pages of which the current page displayed on display **24** is a member. The entire group will be transmitted irrespective of whether the current page on display is the first or an inner page of the group. Finally, the third option allows the user to transmit all pages stored in memory. This option can be used even if no page is currently on display such as the example shown in **FIG. 8B** where the memory usage indicator icon is displayed.

[**0049**] The send menu options discussed in the foregoing are used in the preferred embodiment of the present invention. Nevertheless, alternative send or transmit options can be used to adapt to changing or differing user preferences. For example, a skilled programmer may wish to design application software **70** such that a user could electronically tag or mark pages stored in memory **64** by pressing a button when they are displayed. A fourth option could then be added to the send menu of **FIG. 5** allowing the user to send or transmit those tagged or marked pages when send page module **96** (see **FIG. 2**) is invoked through send button **26**.

[**0050**] Returning now to **FIG. 9**A, the user can choose between the aforementioned send or transmit options using navigation buttons **42** and **44** (see **FIG. 1A**) as indicated by decision diamond **148**. As the user moves between options, the currently selected option will be highlighted in step **152**. Once a selection is made, the send process continues at termination B. As shown in **FIG. 5**, options from the send menu can be confirmed using send button **26** or the menu can be exited through activation of navigation button **46**. Thus, at decision diamond **154**, if the send menu is exited, the send process ends at step **156** by removing the menu from display **24** and returning the display to the previous view (i.e., the view on display prior to invocation of send button **26**). Otherwise, if an option is confirmed through invocation of send button **26**, control will be transferred to send page module **96** at decision diamond **158**.

[**0051**] Following termination C in **FIG. 9**B, an attempt is made initially to send the page(s) first over the serial port in step **162**. Send page module **96** waits for a predetermined timeout period, which is typically one second, in step **164**. If no response is received within the timeout period, a determination is made at decision diamond **166** to attempt an IR transmit, which begins at termination D. If, however, the serial link is established, a determination must still be made at decision diamond **167** whether the serial device that has responded is among those devices that appliance **22** supports for communication. This can be accomplished, for example, by maintaining a database of supported devices in memory **64**. During the handshaking process between appliance **22** and the target device, the target device communicates its identification, which can then be compared with the device database in memory **64** by send page module **96**. If an entry for the target device is not found in the supported device database, the process continues at termination E (see **FIG. 9D**) where control is passed to error utility module **92** (see **FIG. 2**). Error utility module will display a textual message on display **24** in step **184** explaining that communication with a serial device has been aborted because the device is unsupported. In general, navigation buttons **42** and **44** can be used to review messages that cannot fit entirely on display **24**. Once review of the error message is complete, the user can exit the error dialog in step **186** by pressing navigation button **46**. If the responding serial device is supported, send page module **96** displays a send progress animation in step **168** on display **24**.

[**0052**] The send progress animation provided by send page module **96** in step **168** is designed to convey to the user that pages or images are being transferred from appliance **22** to another appliance, device or system. In the preferred embodiment of the present invention this is accomplished through an animation, a scene of which is depicted in **FIG. 10**. While the send or transmit is in progress, an icon that serves as a metaphor for the page transfer is placed in simulated motion on display **24** to confirm in the user's mind that a page transfer is taking place. A paper airplane **172** seeming to move through clouds **174** is the iconic metaphor chosen for the preferred embodiment as shown in **FIG. 10**; however, any suitable symbol can be used that is shown to leave users with the impression that a page transfer is in progress. Additional visual cues are provided to apprise the user of the status of the page transfer. For example, status bar **176** is used to identify how many pages have been selected for transfer and to point out which page is currently being sent. Display region **178** can be used to display the type of appliance or device to which the pages are being transferred (assuming that information was acquired during the handshaking protocol executed in step **162**). A bar graph can optionally be included to graphically portray the progress made in transferring the selected pages.

[0053] A user can interrupt a serial port page transfer session while still in progress by pressing navigation button **46**. If menu/navigation module **104** (see **FIG. 2**) determines that the page transfer session is canceled at decision diamond **182**, the process continues at termination E (see **FIG. 9D**) where control is passed to error utility module **92** (see **FIG. 2**). Error utility module will display a textual message on display **24** in step **184** explaining that a serial page transfer has been aborted. The user can exit the error dialog in step **186** by pressing navigation button **46**. If the user decides not to cancel the communication session, the data is transferred between appliance **22** and the target device or appliance in step **187**.

[0054] In addition to menu/navigation module **104** checking for a cancellation of the page transfer by the user, send page module **96** monitors, in parallel, at decision diamond **188** whether the target device continues to acknowledge receipt of the transmitted pages. If communication is lost with the target, control is passed to error utility module **92** by following termination E to step **184** where a textual message is displayed on display **24** explaining that the serial communication link has been dropped. The error dialog can be exited as discussed in the foregoing.

[0055] As represented by decision diamond **192**, the send progress animation discussed with respect to step **168** will continue to be displayed until the transfer is complete. Moreover, the user can cancel the transfer (see decision diamond **182**) or the target may fail to respond (see decision diamond **188**) any time during the transfer. If the target device acknowledges receipt of all transmitted page(s), then the serial port page transfer has been successful as indicated by step **193**. At completion of the transfer, send page module **96** terminates the send progress animation and returns to a thumbnail view of the image displayed on display **24** prior to invocation of send button **26**.

[0056] Recall that at decision diamond **166**, if no response was received within the timeout period when initiating a page transfer over the serial port, an IR transfer attempt is made by following termination D to **FIG. 9C**. Thus, assuming a timeout occurred at decision diamond **166**, send page module **96** then displays an IR discovery animation on display **24** in step **194**. The IR discovery animation provided by send page module **96** in step **194** is designed to convey to the user that an IR link is being established between appliance **22** and another appliance, device or system. In the preferred embodiment of the present invention this is accomplished through an animation, a scene of which is depicted in **FIG. 11**. While appliance **22** attempts to establish the IR link, an icon that serves as a search metaphor is used in an animation on display **24** to impress upon the user that a search for a device having an IR port is taking place. Alight emitting diode (LED) **196** emanating waves **198** (e.g., simulation of radar or sonar) is the iconic metaphor chosen for the preferred embodiment as shown in **FIG. 11**. As part of the animation, waves **198** are displayed in cumulative fashion beginning with the wave closest to LED **196** and moving progressively away from LED **196**. The shape of the waves is also specifically designed to inform users of the maximum allowable cone angle for the IR port in appliance **22**. In the preferred embodiment, the IR port has a maximum cone angle of 30°. Once all waves **198** are shown together on display **24**, they are cleared from the display and the process repeats. While an LED and emanating waves are used in the preferred embodiment of the present invention, any suitable symbol can be used that is shown to leave users with the impression that appliance **22** is attempting to establish an IR link with another device. To facilitate establishment of the IR link, status bar **176** is used to inform the user that appliance **22** is searching for the target device. Furthermore, display region **178** can be used to provide instruction such as prompting the user to point appliance **22** toward the IR port in the target device.

[0057] A user can interrupt establishment of the IR link by pressing navigation button **46**. Similar to the foregoing discussion with respect to decision diamond **182**, if menu/navigation module **104** (see **FIG. 2**) determines that the page transfer session is canceled at decision diamond **202**, the process continues at termination E (**FIG. 9D**) where control is passed to error utility module **92** (see **FIG. 2**). Error utility module **92** will display a textual message on display **24** in step **184** explaining that the IR page transfer has been aborted. The user can exit the error dialog in step **186** by pressing navigation button **46**.

[0058] Under the control of send page module **96**, appliance **22** will attempt to establish an IR link for a predetermined period of time, which is typically **5** seconds in the preferred embodiment. If no IR device is found and send page module **96** confirms a timeout has occurred at decision diamond **204**, control is passed to error utility module **92** at termination E (**FIG. 9D**). Steps **184** and **186** are carried out as discussed hereinbefore with the exception that the error message displayed explains that no IR device has been found with which to communicate.

[0059] If a device is located at decision diamond **204**, send page module **96** will then determine at decision diamond **206** whether the device is one capable of processing the page or image data to be transferred. This can be accomplished, for example, by maintaining a database of supported devices in memory **64**. During the handshaking process between appliance **22** and the target device, the target device communicates its identification, which can then be compared with the device database in memory **64** by send page module **96**. If an entry for the target device is not found in the supported device database, control is passed to error utility module **92** at termination E as discussed hereinbefore. In this instance, the error message displayed in step **184** indicates that the target device is not supported for communication with appliance **22**.

[0060] Alternatively, if the target device has an entry in the supported device database, the IR page transfer process continues at termination G where send page module **96** displays a send progress animation in step **208** on display **24**, which was discussed hereinbefore with respect to step **168** (see **FIG. 9B**). If menu/navigation module **104** (see **FIG. 2**) determines that the IR page transfer session is canceled at decision diamond **212** from user activation of navigation button **46**, the process continues at termination E where control is passed to error utility module **92** as described previously. Under these circumstances, the error message displayed in step **184** explains that an IR page transfer has been aborted. If the user decides not to cancel the communication session, the data is transferred between appliance **22** and the target device or appliance in step **213**.

[0061] In parallel with menu/navigation module **104** checking for a cancellation of the page transfer by the user,

send page module **96** monitors, at decision diamond **214**, the status of the IR link. If IR communication is lost with the target, the process continues at termination H in **FIG. 9D** where send page module **96** displays a connection interrupted animation on display **24** in step **216**. The connection interrupted animation is designed to convey to the user that the IR link between appliance **22** and the target device has been interrupted. In the preferred embodiment of the present invention, the IR discovery animation discussed with respect to step **194** is displayed in step **216** as the connection interrupted animation to notify the user that the IR link has been dropped and needs to be reestablished through the IR discovery process. As shown in **FIG. 12**, the connection lost animation is identical to the IR discovery animation of **FIG. 11** with the exception that the message on status bar **176** indicates that a previously established IR connection has been interrupted.

[**0062**] Similar to both the send progress animation of steps **168** and **208** and the IR discovery animation of step **194**, the user can cancel the page transfer session through invocation of navigation button **46**. If menu/navigation module **104** (see **FIG. 2**) determines that the page transfer session is canceled at decision diamond **218**, the process continues at termination E where error utility module **92** will display a textual message on display **24** in step **184** explaining that the IR page transfer has been aborted.

[**0063**] If the user declines to cancel the IR page transfer as a result of the IR link interruption, send page module **96** suspends the transfer process for a predetermined time period to allow the IR link to be reestablished as represented by decision diamond **222**. During this period, which typically ranges from 10 to 40 seconds in the preferred embodiment, the connection lost animation of step **216** is displayed on display **24** instructing the user to point appliance towards the IR port of the target device to reestablish the IR link as shown in **FIG. 12**. If the IR link is restored, the IR page transfer process resumes at termination G in **FIG. 9C** where the send progress animation is displayed in step **208** to transfer the remaining pages to the target device. On the other hand, if a timeout occurs, control is passed to error utility module **92** at termination E where a textual message is displayed at step **184** on display **24** indicating the IR link has been lost and the page transfer has been aborted.

[**0064**] Finally, if the IR page transfer is not canceled at decision diamond **212** and the IR link is not interrupted at decision diamond **214**, then the send progress animation discussed with respect to step **208** will continue to be displayed until the transfer is complete as represented by decision diamond **215**. If the target device acknowledges receipt of all transmitted page(s), then the IR link page transfer has been successful as indicated by step **226**. At completion of the transfer, send page module **96** terminates the send progress animation and returns to a thumbnail view of the image displayed on display **24** prior to invocation of send button **26**.

[**0065**] The send page feature of appliance **22** discussed herein with primary reference to **FIGS. 9A, 9B**, and **9C** adopts the convention that page transfers are attempted over the serial port first. If no response is received over the serial port, then, and only then, is an attempt made to transfer pages over the IR link. It will be appreciated by those skilled in the art that alternative designs can be implemented without departing from the principles of the present invention. For example, send page module **96** could be designed to attempt page transfers over both the serial port and IR port simultaneously. If both connections are established, one communication mode can be chosen as the default. Otherwise, appliance **22** could carry out the page transfer over whichever communication path was successfully established. According to another alternative embodiment, the user could be provided with a menu allowing them to choose between a serial page transfer or an IR page transfer. Appliance **22** would then attempt a transfer over the user's choice first and if that fails, prompt the user with the option of attempting the transfer using the other communication mode.

[**0066**] Furthermore, the concepts of the invention have been disclosed through reference to an exemplary embodiment in which only two communication ports (serial port and IR port) are used. The concepts can readily be applied to an appliance that includes any number of communication ports for any type of communication link. For example, instead of or in addition to the serial port and the IR port, the appliance may include a Universal Serial Bus (USB) port and/or an IEEE 1394 (a.k.a FireWire) port.

[**0067**] It is important to emphasize that while the present invention has been illustrated herein with reference to an image capture and communication appliance, the GUI and human-machine interface features of the present invention are applicable to any device or appliance that stores information as data entities or files. Examples of such devices include digital cameras, video recording devices (e.g., video stored in digital form), audio recording devices (e.g., audio stored in digital form), portable fax machines, desktop, laptop, and hand-held computing devices. Furthermore, it is envisioned that the methods disclosed herein for transferring data between an image capture appliance and another device can likewise be used in any device or appliance that stores data and has the necessary communication hardware.

[**0068**] Application software **70**, which comprises an ordered listing of executable instructions for implementing logical functions, can be embodied in any computer-readable medium for use by or in connection with an instruction execution system, apparatus, or device, such as a computer-based system, processor-containing system, or other system that can fetch the instructions from the instruction execution system, apparatus, or device and execute the instructions. In the context of this document, a "computer-readable medium" can be any means that can contain, store, communicate, propagate, or transport the program for use by or in connection with the instruction execution system, apparatus, or device. The computer readable medium can be, for example but not limited to, an electronic, magnetic, optical, electromagnetic, infrared, or semiconductor system, apparatus, device, or propagation medium. More specific examples (a nonexhaustive list) of the computer-readable medium would include the following: an electrical connection (electronic) having one or more wires, a portable computer diskette (magnetic), a random access memory (RAM) (magnetic), a read-only memory (ROM) (magnetic), an erasable programmable read-only memory (EPROM or Flash memory) (magnetic), an optical fiber (optical), and a portable compact disc read-only memory (CDROM) (optical). Note that the computer-readable medium could even be paper or another suitable medium upon which the program

is printed, as the program can be electronically captured, via for instance optical scanning of the paper or other medium, then compiled, interpreted or otherwise processed in a suitable manner if necessary, and then stored in a computer memory.

[0069] The principles of the present invention have been disclosed herein as embodied in a portable, hand-held image capture and communication appliance that provides the flexibility of traditional hand-held scanners yet offers an array of intelligent features not heretofore known in the art. Examples of these features include the ability to transfer scanned images both individually and logical groups to other appliances and devices. Furthermore, image transfer can be performed over both serial and IR communication ports. A GUI is provided that includes metaphoric icons and animations that allow even a novice user to successfully operate the appliance with minimal or no outside instruction. It is these intelligent features that place the present invention in a new class of products known as electronic information appliances that merge the functionality of electronic peripheral devices, such as image scanners, with the processing capabilities and graphical interface used in computers.

[0070] In concluding the detailed description, it should be noted that it will be obvious to those skilled in the art that many variations and modifications can be made to the preferred embodiment without substantially departing from the principles of the present invention. All such variations and modifications are intended to be included herein within the scope of the present invention, as set forth in the following claims.

We claim:

1. A hand-held image capture and communication appliance, comprising:

a photoelement array for acquiring image data;

a memory for saving said image data;

a processor in communication with said memory;

a display in communication with said processor for exhibiting said image data; and

program code stored in said memory and executed by said processor, said program code comprising a send page module for transferring image data between said appliance and an external device.

2. The appliance of claim 1, wherein said appliance includes a first communication port and said send page module comprises:

a first code segment for transferring image data between said appliance and the external device over said first communication port.

3. The appliance of claim 1, wherein said appliance includes a plurality of communication ports and said send page module further comprises:

a plurality of code segments corresponding to said communication ports for transferring image data between said appliance and the external device over said communication ports.

4. The appliance of claim 1, wherein said appliance includes a serial communication port and an infra red communication port and said send page module comprises:

a first code segment for transferring image data between said appliance and the external device over said serial communication port; and

a second code segment for transferring image data between said appliance and the external device over said infra red communication port.

5. A hand-held image capture and communication appliance, comprising:

capturing means for acquiring image data;

storage means for saving said image data;

processing means in communication with said storage means;

display means in communication with said processing means for exhibiting said image data; and

program code stored in said storage means and executed by said processing means, said program code comprising a send page module for transferring image data between said appliance and an external device.

6. The appliance of claim 5, wherein said program code further comprises:

a menu module for displaying valid appliance operations on said display based on a current state and processing any response thereto.

7. The appliance of claim 5, wherein said appliance includes a serial communication port and said send page module comprises:

a first code segment for transferring image data between said appliance and the external device over said serial communication port.

8. The appliance of claim 7, wherein said first code segment comprises:

a second code segment for establishing a serial link with the external device;

a third code segment for displaying a first animation on said display, said first animation representing the transfer of image data from said appliance to the external device; and

a fourth code segment for monitoring the status of said serial link.

9. The appliance of claim 8, wherein said third code segment comprises:

a fifth code segment for simulating movement of a metaphoric icon on said display that is symbolic of an image data transfer.

10. The appliance of claim 9, wherein said metaphoric icon is a paper airplane.

11. The appliance of claim 9, wherein said third code segment further comprises:

a sixth code segment for updating a status bar on said display with the progress of the image data transfer; and

a seventh code segment for providing an identifier for the external device on said display.

12. The appliance of claim 11, wherein said third code segment further comprises:

an eighth code segment for displaying a bar graph representing the progress of the image data transfer.

13. The appliance of claim 5, wherein said appliance includes an infra red communication port and said send page module comprises:

a first code segment for transferring image data between said appliance and the external device over said infra red communication port.

14. The appliance of claim 13, wherein said first code segment comprises:

a second code segment for establishing an infra red link with the external device;

a third code segment for displaying a first animation on said display, said first animation representing the establishment of an infra red link;

a fourth code segment for determining whether infra red image transfer is supported with the external device;

a fifth code segment for displaying a second animation on said display, said second animation representing the transfer of image data between said appliance and the external device;

a sixth code segment for monitoring the status of said infra red link; and

a seventh code segment for displaying a third animation on said display, said third animation representing the loss of said infra red link between said appliance and the external device.

15 The appliance of claim 14, wherein said third code segment comprises:

an eighth code segment for simulating movement of a metaphoric icon on said display that is symbolic of the establishment of an infra red link.

16. The appliance of claim 15, wherein said metaphoric icon is a light emitting diode emanating waves.

17. The appliance of claim 16, wherein said waves emanate at an angle corresponding to the maximum allowable infra red cone angle of said infra red communication port.

18. The appliance of claim 15, wherein said eighth code segment further comprises:

a ninth code segment for updating a status bar on said display with information that said appliance is attempting to establish an infra red link; and

a tenth code segment for providing instruction to facilitate establishment of an infra red link.

19. The appliance of claim 14, wherein said fifth code segment comprises:

an eighth code segment for simulating movement of a metaphoric icon on said display that is symbolic of an image data transfer.

20. The appliance of claim 19, wherein said metaphoric icon is a paper airplane.

21. The appliance of claim 19, wherein said eighth code segment further comprises:

a ninth code segment for updating a status bar on said display with the progress of the image data transfer; and

a tenth code segment for providing an identifier for the external device on said display.

22. The appliance of claim 21, wherein said eighth code segment further comprises:

an eleventh code segment for displaying a bar graph representing the progress of the image data transfer.

23. The appliance of claim 14, wherein said seventh code segment comprises:

an eighth code segment for simulating movement of a metaphoric icon on said display that is symbolic of the loss of said infra red link between said appliance and the external device.

24. The appliance of claim 23, wherein said metaphoric icon is a light emitting diode emanating waves.

25. The appliance of claim 24, wherein said waves emanate at an angle corresponding to the maximum allowable infra red cone angle of said infra red communication port.

26. The appliance of claim 23, wherein said eighth code segment further comprises:

a ninth code segment for updating a status bar on said display with information that an infra red link between said appliance and the external device has been interrupted; and

a tenth code segment for providing instruction to facilitate reestablishment of an infra red link.

27. A system, comprising:

a memory for holding information stored as at least one data entity;

a processor in communication with said memory;

a display in communication with said processor for exhibiting said at least one data entity;

a plurality of communication ports;

program code stored in said memory and executed by said processor, said

program code comprising a send module for transferring said at least one data entity between said system and an external device;

aid send module comprising:

a plurality of code segments corresponding to said communication ports for transferring said at least one data entity between said system and an external device over said communication ports; and

a code segment for displaying an animation representing the transfer of image data from said system to the external device.

28. A method for transferring image data from a hand-held image capture and communication appliance to an external device, comprising the steps of:

capturing an image with said appliance;

saving said image in a storage medium;

sending the image data to the external device over a first communication port; and

displaying a first animation on a display associated with said appliance, said first animation representing the transfer of image data from said appliance to the external device.

29. The method of claim 28, further comprising the steps of:

displaying valid appliance operations on said display means based on a current state; and

processing any user response to said display of valid appliance operations.

30. The method of claim 28, wherein said appliance includes a plurality of communication ports, and further comprising the steps of:

determining if said sending step was successful;

sending the image data to the external device over an alternative communication port if said sending step was unsuccessful; and

repeating said determining and sending steps until said sending step is successful or all of said communication ports are exhausted.

31. The method of claim 30, wherein said sending steps each comprise the steps of:

establishing a communication link with the external device; and

monitoring the status of the communication link with the external device.

32. The method of claim 31, further comprising the steps of:

displaying a second animation on said display, said second animation representing the establishment of a communication link over said alternative communication port; and

displaying a third animation on said display, said third animation representing the loss of a communication link over said alternative communication port.

33. The method of claim 32, wherein said displaying a second animation step comprises the step of:

simulating movement of a metaphoric icon that is symbolic of the establishment of a communication link.

34. The method of claim 33, wherein said alternative communication port is an infra red communication port and wherein said metaphoric icon is a light emitting diode emanating waves.

35. The method of claim 34, wherein said waves emanate at an angle corresponding to a maximum allowable infra red cone angle of said infra red communication port.

36. The method of claim 32, wherein said displaying a second animation step comprises the step of:

simulating movement of a metaphoric icon that is symbolic of the loss of a communication link.

37. The method of claim 35, wherein said metaphoric icon is a light emitting diode emanating waves.

38. The method of claim 37, wherein said waves emanate at an angle corresponding to a maximum allowable infra red cone angle of said infra red communication port.

39. The method of claim 28, wherein said displaying a first animation step comprises the step of:

simulating movement of a metaphoric icon that is symbolic of an image transfer.

40. The method of claim 38, wherein said metaphoric icon is a paper airplane.

41. A method for transferring at least one data entity from a system having a plurality of communication ports to an external device, comprising the steps of:

sending the at least one data entity to the external device over a first communication port;

displaying a first animation on a display associated with said system, said first animation representing the transfer of the at least one data entity from the system to the external device;

determining if said sending step was successful;

sending the at least one data entity to the external device over an alternative communication port if said sending step was unsuccessful; and

repeating said determining and sending steps until said sending step is successful or all of said communication ports are exhausted.

42. A computer readable medium having a program for manipulating image data acquired by a hand-held image capture and communication appliance, said program comprising:

logic configured for sending the image data to an external device over a first communication port; and

logic configured for displaying a first animation on a display associated with said appliance, said first animation representing the transfer of image data from said appliance to the external device.

43. The computer readable medium of claim 42, further comprising:

logic configured for displaying valid appliance operations on said display means based on a current state; and

logic configured for processing any user response to said display of valid appliance operations.

44. The computer readable medium of claim 42, further comprising:

logic configured for determining if said sending step over said first communication port was successful;

logic configured for sending the image data to the external device over an alternative communication port if said sending step over said first communication port was unsuccessful; and

logic configured for repeating said determining and sending steps until said sending step is successful or all of said alternative communication ports are exhausted.

45. The computer readable medium of claim 44, further comprising:

logic configured for displaying a second animation on said display, said second animation representing the establishment of a communication link over said alternative communication port; and

logic configured for displaying a third animation on said display, said third animation representing the loss of a communication link over said alternative communication port.

46. A computer readable medium having a program for manipulating information stored as data entities in a memory, said program comprising:

logic configured sending at least one data entity from a system to an external device over a first communication port;

logic configured for displaying a first animation on a display associated with said system, said first animation representing the transfer of the at least one data entity from the system to said external device;

logic configured for determining if said sending step was successful;

logic configured for sending said at least one data entity to said external device over an alternative communication port if said sending step was unsuccessful; and

logic configured for repeating said determining and sending steps until said sending step is successful or all of said communication ports are exhausted.

* * * * *