United States Patent [19]

Miller

[11] **3,873,875**

[45] **Mar. 25, 1975**

[54] **TEMPERATURE COMPENSATING PARALLAX BARRIER SUPPORTING SYSTEM FOR COLOR CATHODE RAY TUBES**

[75] Inventor: **Larry R. Miller,** Waynesboro, Pa.

[73] Assignee: **GTE Sylvania Incorporated,** Stamford, Conn.

[22] Filed: **Sept. 29, 1971**

[21] Appl. No.: **184,860**

Related U.S. Application Data

[62] Division of Ser. No. 61,163, Aug. 5, 1970, Pat. No. 3,639,798.

[52] **U.S. Cl.** **313/405,** 313/407

[51] **Int. Cl.** ... **H01j 29/02,** H01j 31/20, H01j 29/06

[58] **Field of Search** ..... 313/85 S

[56] **References Cited**

UNITED STATES PATENTS

3,449,611	6/1969	Schwartz et al.	313/85 S
3,524,972	8/1970	Cooper et al.	313/85 S
3,524,974	8/1970	Kautz	313/85 S
3,581,135	5/1971	Garrett et al.	313/85 S

Primary Examiner—Robert Segal

Attorney, Agent, or Firm—Norman J. O'Malley; Donald R. Castle; William H. McNeil

[57] **ABSTRACT**

Parallex barrier supporting means comprising substantially flat, rectangular bi-metallic elements are disclosed. The elements are attached to the upper portion of the barrier frame and have depending springs attached thereto. The springs have apertures formed therein to mate with studs formed on the tube envelope inner wall.

2 Claims, 8 Drawing Figures

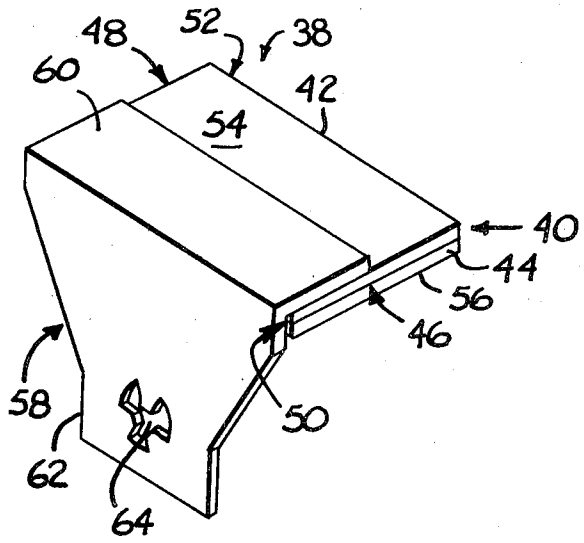

Fig. 2

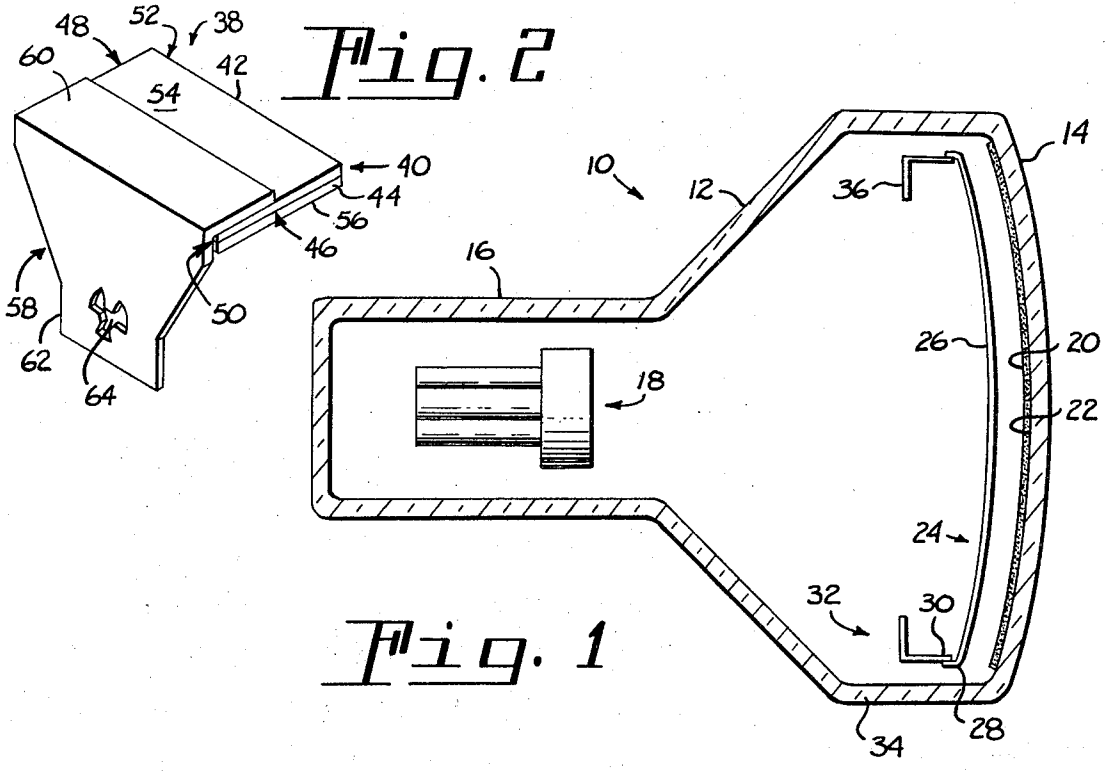

Fig. 1

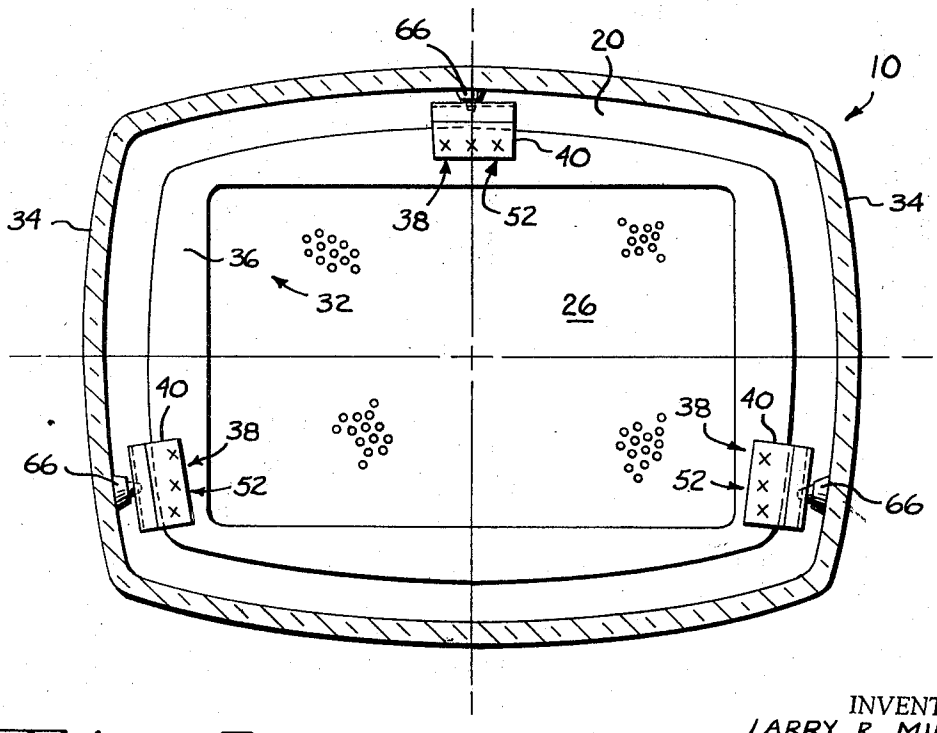

Fig. 3

INVENTOR.
LARRY R. MILLER

BY

Donald R. Castle

ATTORNEY

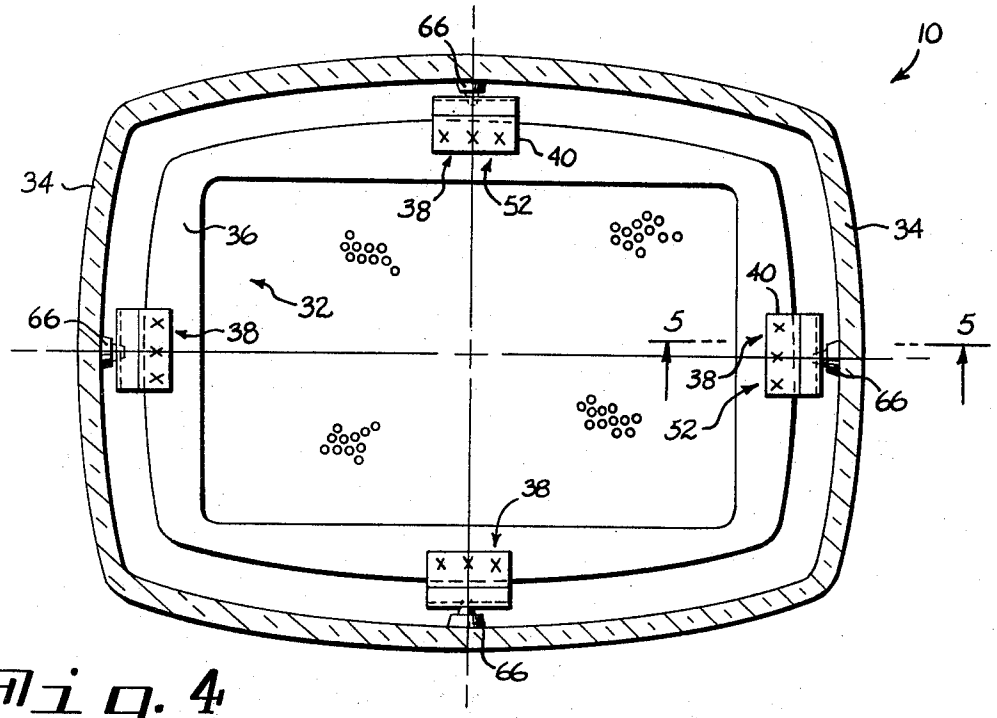

Fig. 4

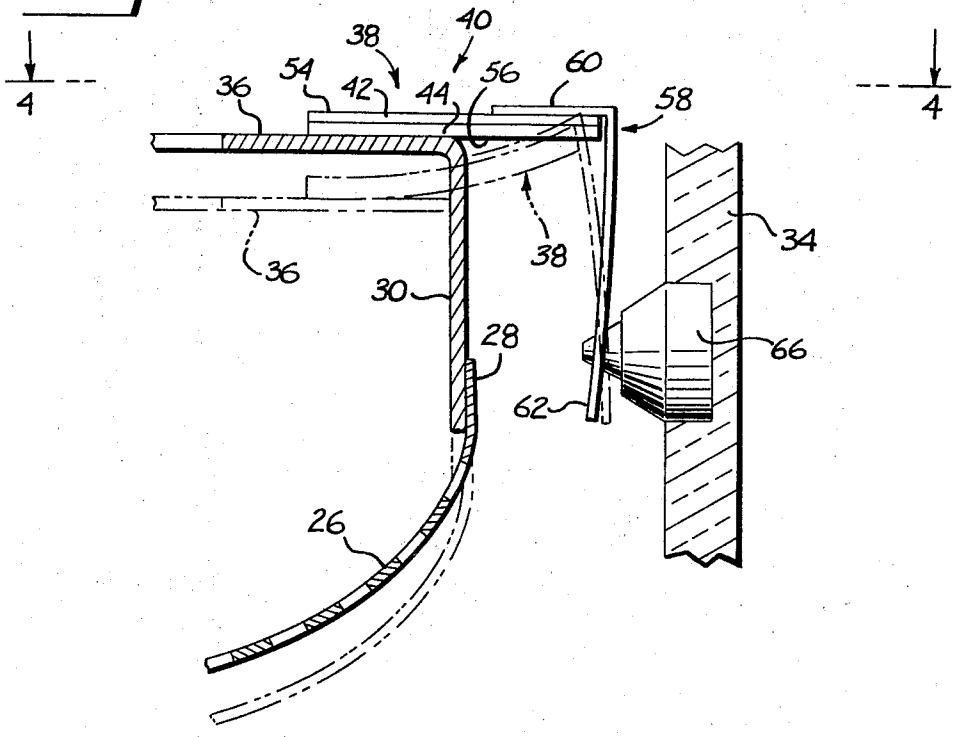

Fig. 5

INVENTOR.
LARRY R. MILLER

BY

ATTORNEY

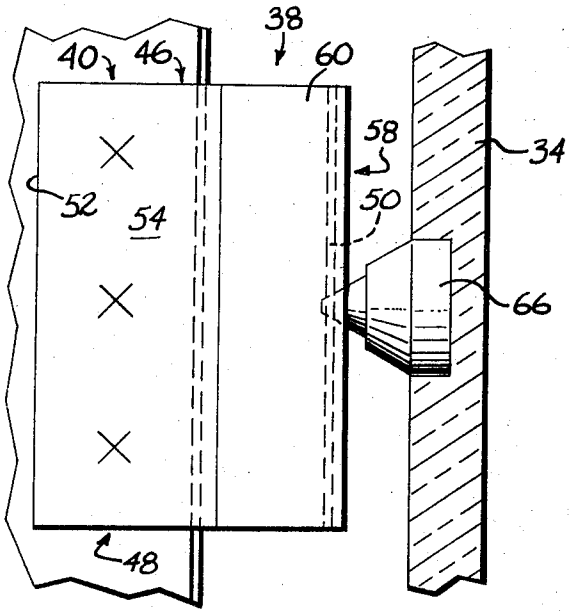

Fig. 6

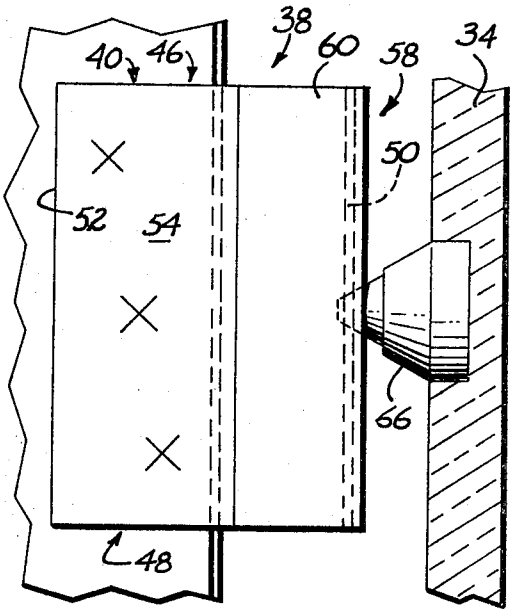

Fig. 7

Fig. 8

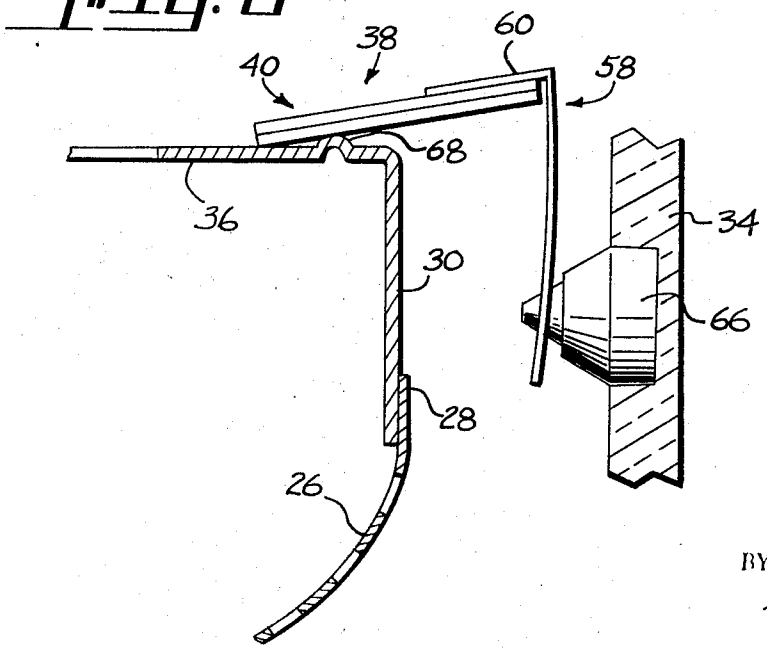

INVENTOR.
LARRY R. MILLER

BY
Donald R. Castle

ATTORNEY

TEMPERATURE COMPENSATING PARALLAX BARRIER SUPPORTING SYSTEM FOR COLOR CATHODE RAY TUBES

CROSS-REFERENCE TO RELATED APPLICATION

This application is a division of Ser. No. 61,163, filed Aug. 5, 1970 and now U.S. Pat. No. 3,639,798.

BACKGROUND OF THE INVENTION

This invention relates to color cathode ray tubes and more particularly to temperature compensating supporting systems for the parallax barrier mounted therein.

In conventional color cathode ray tubes in use today a mosaic, cathodoluminescent phosphor screen is formed on the interior surface of the viewing screen. Positioned at a point remote therefrom is an electron source formed to provide an electron beam or beams for exciting the phosphors to luminescence. Intermediate the electron source and screen, but closely adjacent to the screen, is provided a parallax barrier to aid in color selection. In the color tube in greatest use, the parallax barrier acts as a shadow mask and comprises a relatively fragile foraminated portion attached to a relatively rigid frame. Support means, generally in form of apertured leaf springs, are attached to the sides of the frame and cooperate with studs formed on an inner surface of the tube wall. The apertures in the foraminated portion are particularly aligned with the mosaic pattern of the screen and for successful maintenance of color purity it is necessary that this alignment remain relatively constant during tube operation. This condition has been difficult to maintain in the past because of the heat generated at the parallax barrier due to the bombardment thereon of the electron beam or beams. Misalignment occurred because of the differences in thermal expansion of the thin material in the foraminated portion and the heavier material in the frame. This differential in expansion during tube operation caused the foraminated portion to bow toward the screen thus disturbing the alignment.

To correct this problem, a recent innovation provides for intermediate mounting members between the frame and the supporting springs which comprise bi-metallic elements having upper and lower portions connected by an expansion hinge. The lower portion is affixed to the frame and the upper portion has one end of a leaf spring attached thereto in such a manner that the free end of the spring engages a mating tapered stud which projects inwardly from an upstanding wall of the face plate. In designs of this type the expanding hinge or loop projects inwardly toward the center of the tube and thus some modification of the frame is necessary to accept this projecting hinge.

Another innovation involved a similar intermediate mounting member utilizing a contracting or closing loop or hinge. In this type of structure the loop projected away from the frame and occupied the area between the frame and the face plate side wall, thus obviating any modification to the frame. This type, however, presents problems in smaller screen sizes of color tubes where the space between the frame and side wall is apt to be critical.

OBJECTS AND SUMMARY OF THE INVENTION

Therefore, it is an object of this invention to enhance color television tube operation.

It is another object of the invention to obviate the difficulties inherent in the prior art structures.

It is another object of the invention to provide a temperature compensating mounting means which is simple and inexpensive to manufacture and install.

These objects are accomplished in one aspect of the invention by the provision of a color cathode ray tube containing, within an evacuated envelope, a mosaic cathodoluminescent screen, an electron source positioned remote from said screen, a parallax barrier mounted between the source and the screen but closer to the screen, and mounting means for releasably mounting the barrier within the tube. The barrier is comprised of a foraminated relatively fragile portion which is attached at its peripheral edge to one end of a circumferential side wall of a relatively rigid frame. The circumferential side wall of the frame extends substantially perpendicular to the screen and the end of the wall remote from the foraminous portion has formed thereon an inwardly projecting flange. The mounting means comprises a plurality of substantially flat metallic elements positioned at spaced intervals about the frame and attached to the flange. Each of the elements has a depending spring which extends toward the screen between the circumferential wall of the frame and the envelope. The springs have means formed therein for engaging mating means formed on the envelope.

BRIEF DESCRIPTION OF THE DRAWINGS

FIG. **1** is an elevational sectional view of a typical color cathode ray tube, greatly simplified;

FIG. **2** is a perspective view of the mounting means;

FIG. **3** is a sectional plan view of the face plate portion of a color cathode ray tube utilizing the invention;

FIG. **4** is a sectional plan view similar to FIG. **3** showing an alternate embodiment of the invention;

FIG. **5** is a sectional elevational view taken along the line **5—5** of FIG. **4**;

FIG. **6** is a plan view taken along the line **6—6** of FIG. **5**;

FIG. **7** is a plan view similar to FIG. **6** but illustrating the element of FIG. **2**; and

FIG. **8** is a partial, sectional elevational view showing an alternate mounting embodiment.

DESCRIPTION OF THE PREFERRED EMBODIMENTS

For a better understanding of the present invention, together with other and further objects, advantages, and capabilities thereof, reference is made to the following disclosure and appended claims in connection with the above-described drawings.

Referring now to the drawings with greater particularity, there is shown in FIG. **1** a simplified view of a typical color cathode ray tube **10** having an evacuated envelope **12.** A face plate portion **14** seals one end of envelope **12** and a reduced diameter neck **16** seals the other end. An electron gun **18** is positioned within the neck for directing one or more beams of electrons to a mosaic phosphor screen **20** which is formed on the interior surface **22** of face plate **14.** A parallax barrier **24,** to aid in color selection, is removably mounted adjacent the phosphor screen **20.**

The parallax barrier, which in this instance is a shadow mask, comprises a relatively fragile foraminated portion **26** attached at its peripheral edge **28** to

one end of a circumferential side wall **30** of a relatively rigid frame **32.** The side wall **30** extends substantially perpendicular to the screen **20** and is parallel to an upstanding circumferential wall **34** of envelope **12** which projects from face plate **14.** The end of wall **30** remote from the foraminated portion **26** is provided with an inwardly projecting flange **36.**

The novel mounting means **38** of this invention is shown isolated in FIG. **2** and comprises a substantially flat bi-metallic element **40** comprised of two contiguous layers **42** and **44** having different thermal coefficients of expansion. Layer **44** has the higher coefficient of expansion and can be, for example, a composition of 22% Ni, 3% Cr,, with the balance Fe. Layer **42** has a lower coefficient of expansion which should be substantially zero over the temperature range of normal tube operation (22°C–75°C at the mask) and can be, for example, Invar, which has composition of 36% Ni and the balance Fe. Such a material is available as Chace No. 2400 bimetal from the W. M. Chace Co. Element **40** is substantially rectangular and has short edges **46, 48**; a long front edge **50** and a long back edge **52**; and upper and lower surfaces **54, 56.** A depending spring **58** is attached to element **40** and, as is shown in FIG. **2,** the attachment is accomplished via a spring flange **60** fixed to upper surface **54** as by welding. This is an exemplary attachment only, and the spring flange can be attached to lower surface **56** or the spring can be formed without the flange and be connected directly to edge **50.** Spring **58** is substantially trapezoidal and is provided at its free end **62** with an aperture **64** for engaging a projecting stud **66,** a plurality of which are positioned in wall **34** of tube **10.**

The mounting means **38** of this invention can be utilized in either of the two most prevelant supporting systems currently in use, namely: a three point system and a four point system. Each of these systems will be discussed in turn.

In the three point system, as illustrated in FIG. **3,** a first mounting means **38** is positioned substantially on the vertical axis of the tube **10.** Bi-metallic element **40** is fixedly attached to flange **36** of frame **32** with the high expansion material lowermost and adjacent the flange **36.** Attachment is made at a plurality of points, indicated as x's in the drawing, and the attaching means can be any suitable type, such as welds. For the first mounting means **38,** the welds are all positioned a substantially equal distance in from back edge **52.**

The remaining two mounting means **38** are positioned opposite one another on the short sides of frame **32,** some distance below the horizontal axis of tube **10.** Ideally, they are about 110° from the mounting means located on the vertical axis. The mounting means on the short sides of the frame are identical to the first mentioned means on the vertical axis of tube **10** except that the attachment points thereon are spaced progressively further from the back edge **52** of the elements **40** as the distance from the horizontal axis increases. This reduces the active length of the bi-metal and compensates for the fact that the side mounted elements are not on the horizontal axis.

The four point suspension system is shown in FIG. **4** and comprises four mounting means **38,** two being mounted substantially on the vertical axis and two being mounted on the horizontal axis. With this type of equalized support, all of the individual attachment means for the elements **40** are equally spaced from the back edge **52.**

During operation of the tube heat generated in the mask and frame by bombardment of the electron beam or beams thereon causes the mask **26** to expand. Without some form of compensation, the expansion destroys the critical alignment between the holes in the mask and the mosaic phosphor screen resulting in a loss of purity. With the mounting means of this invention, however, this heat-generated distortion is corrected as is shown in FIG. **5.** As the heat builds up in the mask and frame it is transferred to the bi-metallic element **40** which bends as shown because of the differential in thermal expansion between the layers. Since one point of the system, namely the spring aperture and the fixed stud **66** is completely stationary, this bending movement of the bi-metal is transferred into downward movement of the mask and frame, which serves to maintain alignment.

An alternate embodiment of the invention is shown in FIG. **8.** Herein, the flange **36** is provided, at least at those areas whereat elements **40** are to be connected, with a raised protuberance or rib **68.** This insures that the bi-metal is not being pressed against the frame, say from heat caused distortion during welding. If the bi-metal were being pressed against the frame then the first say, 20° of heat, might serve only to relieve the tension the bi-metal was originally in. In such instance, the degree of movement obtainable might not be sufficient to correct completely for the misalignment occuring during tube operation.

While various types of bi-metallic elements can be used, excellent results have been achieved using Chace Type 2400. The element **40** is approximately 1.5 inches long and 1 inch wide by 0.060 inch thick. The spring material can be Inconel ×750, 1.5 inches at the widest part of the trapezoid and 0.5 inch at the narrow end.

Thus, it will be seen that there is here provided a temperature compensating mask mounting system with many advantages over the prior art. It is simple and inexpensive to manufacture and requires no changes or modification to be made to the existing mask-frame structure.

While there have been shown and described what are at present considered the preferred embodiments of the invention, it will be obvious to those skilled in the art that various changes and modifications may be made therein without departing from the scope of the invention as defined by the appended claims.

I claim:

1. A parallax barrier supporting element formed for affixation to an inwardly projecting flange on said barrier comprising: a flat, planar, bimetallic element comprised of two dissimilar materials one of which has a higher thermal coefficient of expansion than the other and a depending spring affixed on one end of said element, said spring projecting from said plane of said element at an angle of substantially 90° and having formed therein means for engaging mating means.

2. The invention of claim **1** wherein the depending portion of said spring is substantially trapezoidal.

* * * * *