April 15, 1969 Z. LOSTON 3,438,063

BELT EMPLOYING CUFF LINKS OR SIMILAR FASTENING MEANS

Filed March 8, 1966

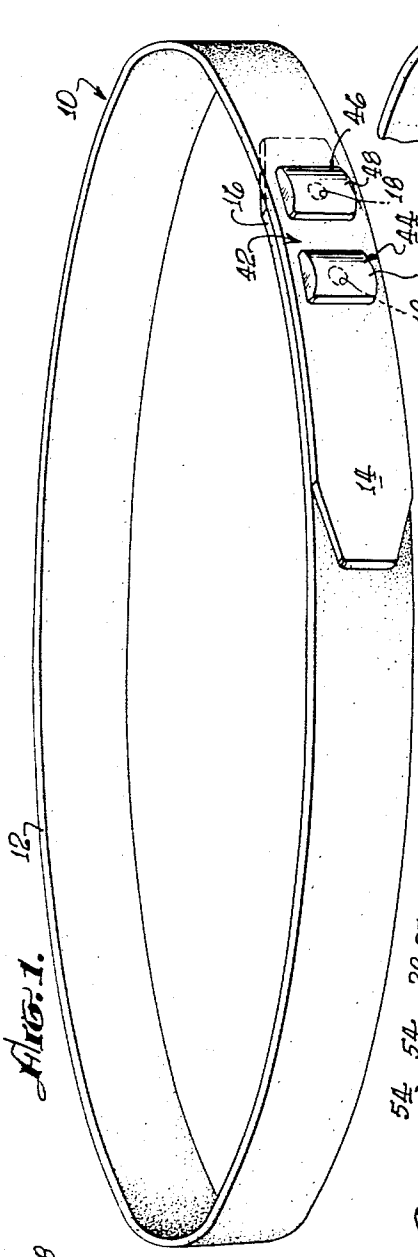

Fig. 1.

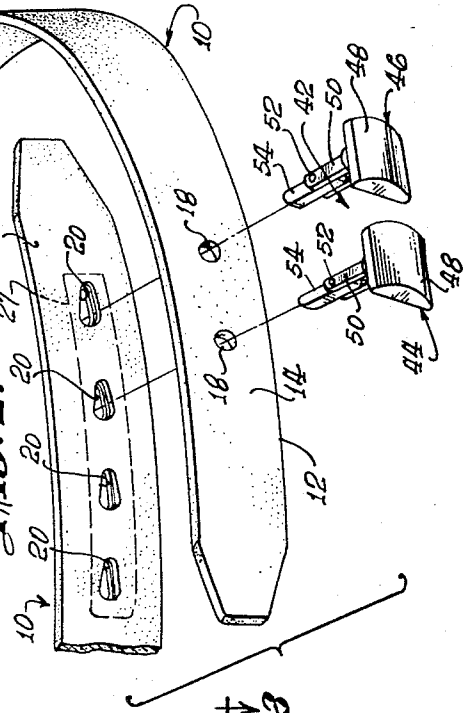

Fig. 2.

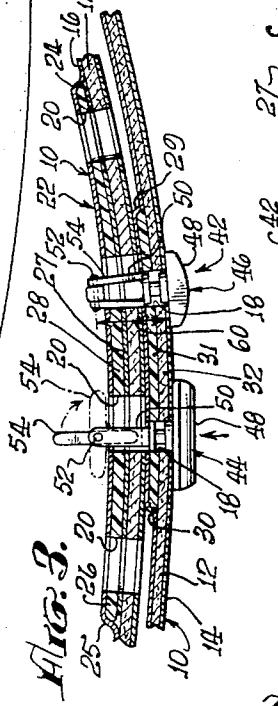

Fig. 3.

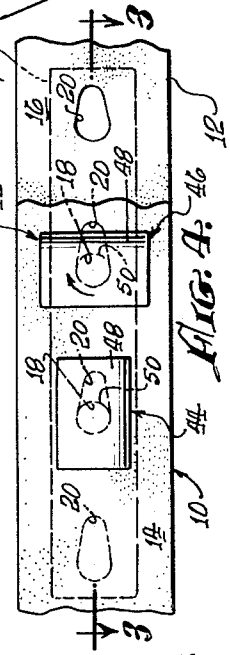

Fig. 4.

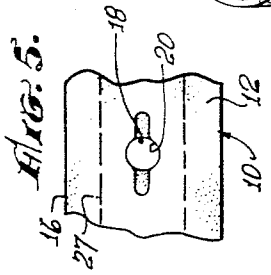

Fig. 5.

INVENTOR.
ZALLO LOSTON,
By His Attorneys
Brendley & Horn

United States Patent Office 3,438,063 Patented Apr. 15, 1969

3,438,063

BELT EMPLOYING CUFF LINKS OR SIMILAR FASTENING MEANS

Zallo Loston, 113 S. Arnaz Drive, Beverly Hills, Calif. 90211

Filed Mar. 8, 1966, Ser. No. 532,619
Int. Cl. A41f 9/00; A44b 11/25, 13/00
U.S. Cl. 2—322 5 Claims

ABSTRACT OF THE DISCLOSURE

A belt for apparel which utilizes at least one cuff link with a pivotable member, or similar fastening means, for securing the overlapping ends of the belt. The belt ends include padded portions which provide a thickness that is approximately the same as the length of the shank of the cuff link, to insure a proper closure.

This invention relates to a belt for apparel and, in particular, to a belt wherein a cuff link or similar fastening means performs the function of the usual buckle.

In the prior art it is conventional to form a belt from a belt member and a buckle which cooperates with a plurality of holes on one end of the belt. This arrangement is inflexible in that each belt usually has a single buckle associated therewith, thus fixing the appearance of the belt. In order to vary the appearance of one's belt, the individual is required to purchase a number of different belts. In addition, it is not uncommon for the buckles to scratch, deteriorate or otherwise wear requiring that the entire belt be discarded. Finally, such a buckle-belt member arrangement is cumbersome in appearance and often exposes a plurality of distorted holes detracting from the appearance of the belt. In order to improve upon the conventional belt, there have been attempts to devise belts with replaceable buckles, such as shown in U.S. Patent No. 2,704,871 issued to F. M. Bender et al. on Mar. 29, 1955. This arrangement is of some value in improving the flexibility of a particular belt but it requires a supply of relatively expensive buckle members which can only be employed as buckles and which are limited in their design flexibility. In addition, such replaceable buckles are usually cumbersome in appearance and difficult to install and change.

This invention solves the above-mentioned prior art problems and provides a belt wherein the fastening means may readily be changed to suit the individual's wardrobe and taste. The change of the belt's appearance by the addition of different fastening means is accomplished easily and inexpensively and in a manner that no unsightly holes are exposed. The resulting appearance is uncluttered and consistent with modern tastes. Briefly, the structure that accomplishes these advantages are as follows: a belt for apparel comprising an elongated belt member having ends in overlapping relationship with at least one hole located in each of said ends in an aligned relationship; and, a separate fastening means located in said aligned holes for securing said belt ends in a substantially fixed position with respect to one another whereby a belt is formed.

The above advantages will be completely understood with reference to the drawings, wherein:

FIG. 1 is a perspective view of the belt including the belt member and fastening means;

FIG. 2 is a perspective view of the ends of the belt showing the manner in which the holes in the ends of the belt and the fastening means are aligned;

FIGS. 3 and 4 are sectional and front views showing the manner in which the fastening means is secured in the belt member; and,

FIG. 5 is an alternate embodiment of the invention.

Referring to FIG. 1, the belt **10** comprises a belt member **12** and fastening means **42**. The belt member **12** has a pair of ends **14** and **16** which are in overlapping relationship with end **16** also being in underlying relationship with respect to end **14**. Each of the ends **14** and **16** has at least one hole therein and preferably both ends have a plurality of holes with underlying end **16** having more holes than end **14** to facilitate incremental adjustment of belt member **12**. Specifically, belt end **14** has two holes **18** while belt end **16** has four or more holes **20** (FIG. 2). The plurality of holes **20** in end **16** enable holes **18** to be aligned with different pairs of holes **20** in order to provide incremental adjustment of belt member **12**. This facilitates the fitting of the belt to persons with various waist sizes. The holes **20** in the preferred embodiment have a tear-drop configuration. As will be explained later, this configuration facilitates the insertion of fastening means **16**. As shown in FIG. 1, the holes **20** are hidden when fastening means **42** is in place and the belt is secured to the associated apparel.

The belt member **12** is completed by providing a limited length padding portion **22**. The padding portion **22** has one part **24** located on belt end **16** and another part **29** located on belt end **14** (FIG. 3). The padding portion **24** on end **16** comprises a lining layer **25**, a resilient member **26** and a metal insert **27** located in sequence and adjacent to belt body **28**. The padding portion **29** on end **14** comprises a lining **30** and a resilient member **31** which are located in sequence adjacent body **32**. The holes **18** pass through lining **30**, resilient member **31** and body **32** while holes **20** pass through lining **25**, resilient member **26**, insert **27** and body **28**. The resilient members **26** and **31** are resilient to facilitate the adjustment and locking of fastening means **42** and to accommodate various size fastening means **42**. The metal insert **27** adds a certain rigidity to the end **16**, thereby limiting movement of the belt ends and facilitating the securing of belt member **12**.

The fastening means **42** is preferably a cuff link and, in particular, a pair of cuff links **44** and **46** each having a surface portion **48** with a shank **50** rigidly attached thereto and pivotally mounting at **52** a pivotable member **54**. The pivotable member **54** may assume at least two positions. A first position is shown in FIG. 2, wherein pivotable member **54** is substantially parallel to shank **50** and adapted to readily pass through holes **18** and **20** (FIG. 3). The pivotable member **54** may also assume a second position perpendicular to shank **50** as shown by the broken lines on the left side of FIG. 3, wherein the belt end **14** is secured to belt end **16**. The final locking of the belt ends **14** and **16** is accomplished by rotating the cuff link (e.g., 90 degrees) (right side of FIGS. 3 and 4). It should be noted that the tear-drop configuration of holes **20** facilitates the placement of cuff links **46** and **48** through the holes and then the movement of pivotable member **54** to a perpendicular position. In addition, the padding portion **22** provides the belt with a thickness that is approximately the same as the uninterrupted length **60** of shank **50**. This relatively dimensioning of the fastening means and the belt and the use of the padding portions along with the tear-drop holes enables the cuff link to function as a fastening means in a most effective manner and enables the pivotable member to be adjusted with little inconvenience or discomfort.

It should be understood that it is within the scope of the invention to employ other button-like or similar fastening means that may not be termed a cuff link according to conventional terminology. It is also within the broad scope of the invention to employ less than two and more than one such fastening means. The use of two fastening means is particularly convenient since it is that number

that is usually available and that is sufficient to provide an adequate belt fastener.

It is also within the scope of the invention to employ hole configurations other than the tear-drop shape shown in FIGS. 2–4. For example, in FIG. 5, hole **20** is shown in the form of a key-slot configuration. Similarly, elliptical, circular, diamond, square, rectangular, and parabolic hole shapes may be employed.

In use, the belt member **12** is first placed around the apparel to be secured. The holes **18** are aligned with a pair of the selected holes **20** which provide the desired comfort and fit. With the holes **18** and **20** aligned, one of the cuff link members **44** or **46** is placed through the holes with the pivotable member **54** extending therethrough. The pivotable member **54** is then positioned perpendicular to shank **50** and the entire cuff link is rotated to complete the fastening of the belt ends **14** and **16** (FIGS. 3 and 4). This procedure is repeated for the other cuff link, whereupon the belt is properly located and secured to the apparel.

This belt provides maximum flexibility in appearance, adds a new dimension to the usefulness of cuff links, provides an inexpensive manner of tailoring belts to a person's wardrobe and for different events. Thus, it is a relatively inexpensive manner for providing a multiplicity of belts. In addition, the construction hides any unsightly holes and tends to increase the life of the belt.

Although this invention has been disclosed and illustrated with reference to particular applications, the principles involved are susceptible of numerous other applications which will be apparent to persons skilled in the art. For example, the padding may take the form of separate and independent washers or similar members.

What is claimed is:

1. A belt for apparel comprising:

a belt member having ends in overlapping relationship with a plurality of holes located in each of said ends in aligned relationship, a cuff link having a shank and a pivotal member mounted thereon, said belt member ends having a padding portion of a limited length and having a thickness that matches the thickness of said shank placed in said holes, whereby a belt may be formed by insertion of the shank in said aligned holes.

2. The structure recited in claim **1**, wherein one of the ends of said belt member is in an underlying relationship with respect to said other end, said underlying

end having more holes therein than said other end, whereby said belt may be adjusted incrementally.

3. The structure recited in claim **2**, wherein said holes in said underlying portion of said belt member are of a tear-drop configuration.

4. A belt for apparel comprising:

an elongated belt member having ends in overlapping relationship, said ends having a padding portion, with at least one hole located in each of said ends in an aligned relationship;

a separate fastening means, including at least one cuff link, located in said holes which are aligned for securing said belt ends in a substantially fixed position with respect to one another, said cuff link having a surface portion, a shank extending from said surface portion and a pivotable member mounted on said shank that is adapted to pass through said aligned holes when in a first position and then pivotable to a second position for securing said ends, whereby a belt is formed, said padding portion having a thickness that at least closely approaches the length of said shank when said pivotable member is in the second position.

5. A belt for apparel comprising:

a belt member having ends in overlapping relationship with a plurality of holes located in each of said ends in aligned relationship, a fastening means having a shank with heads on both ends, said belt member ends having a padding portion of a limited length and having a thickness that matches the thickness of said shank placed in said hole, whereby a belt may be formed by insertion of the fastening means in said aligned holes.

References Cited

UNITED STATES PATENTS

644,903	3/1900	Flannery	2—319
2,494,262	1/1950	Pease	2—338
2,665,465	1/1954	Albrecht	24—97
2,884,675	5/1959	Sternschuss	24—176 X
3,105,974	10/1963	DeGrazia	2—338 X
3,109,212	11/1963	Emery	24—206 X

HERBERT F. ROSS, *Primary Examiner.*

G. V. LARKIN, *Assistant Examiner.*

U.S. Cl. X.R.

24—31, 78, 206