# United States Patent

**Smith**

[15] **3,648,963**

[45] **Mar. 14, 1972**


## [54] CORE FOR CASTING CONCRETE SLABS


[72] Inventor: **Robert E. Smith**, Dayton, Ohio

[73] Assignee: **The Flexicore Co., Inc.**, Dayton, Ohio



[22] Filed: **Aug. 17, 1970**

[21] Appl. No.: **64,540**

[52] **U.S. Cl.** .....**249/65**, 25/128 D, 249/178

[51] **Int. Cl.**.....**B28b 7/32**

[58] **Field of Search**.....25/128 D; 249/65, 150, 175, 249/178, 183



[56] **References Cited**

UNITED STATES PATENTS

| | | | |
|---|---|---|---|
| 2,485,898 | 10/1949 | Mathews et al. | 249/65 |
| 2,977,658 | 4/1961 | Smith et al. | 249/65 |
| 3,101,519 | 8/1963 | Smith | 25/128 D |
| 3,104,441 | 9/1963 | Smith | 249/65 |
| 3,352,529 | 11/1967 | Haas | 249/65 X |

FOREIGN PATENTS OR APPLICATIONS

| | | | |
|---|---|---|---|
| 1,332,072 | 6/1963 | France | 25/128 D |
| 458,625 | 12/1936 | Great Britain | 249/65 |



*Primary Examiner*—J. Spencer Overholser
*Assistant Examiner*—Ben D. Tobor
*Attorney*—Robert L. Kahn



[57] **ABSTRACT**

A core for providing noncylindrical passages in long concrete slabs comprise a multi-channel molding of laterally expansible material. A core of suitable length is provided with one or more cylindrical passages for receiving compressed air for lateral expansion purposes. The core section itself may be generally oval with flattened top and bottom faces. In addition to the cylindrical passages for inflation by air, one or more supplemental open air passages for the entire core length are provided. The shape, sectional area and orientation of such supplemental open air passages function to direct over-all lateral expansion of the molding, to maintain substantial congruence between the expanded and normal core shapes.


**6 Claims, 3 Drawing Figures**

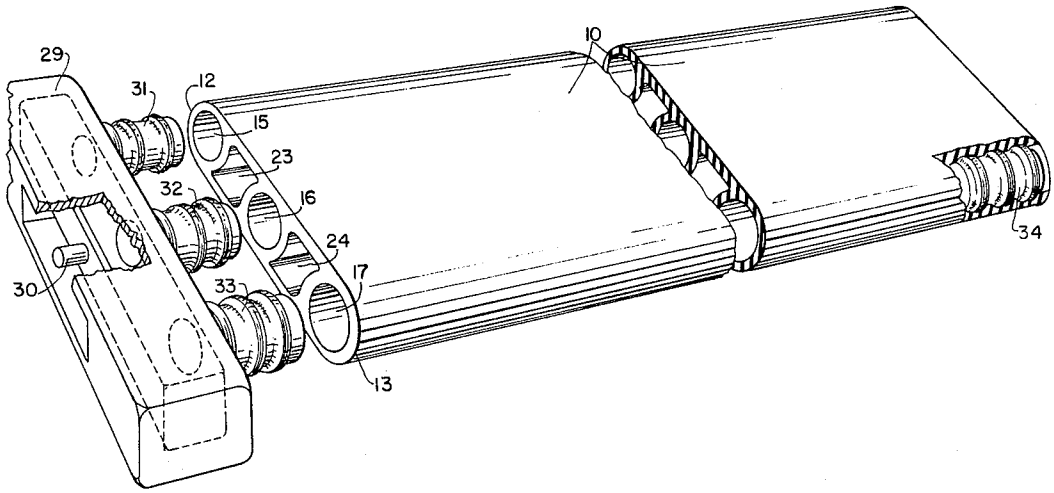

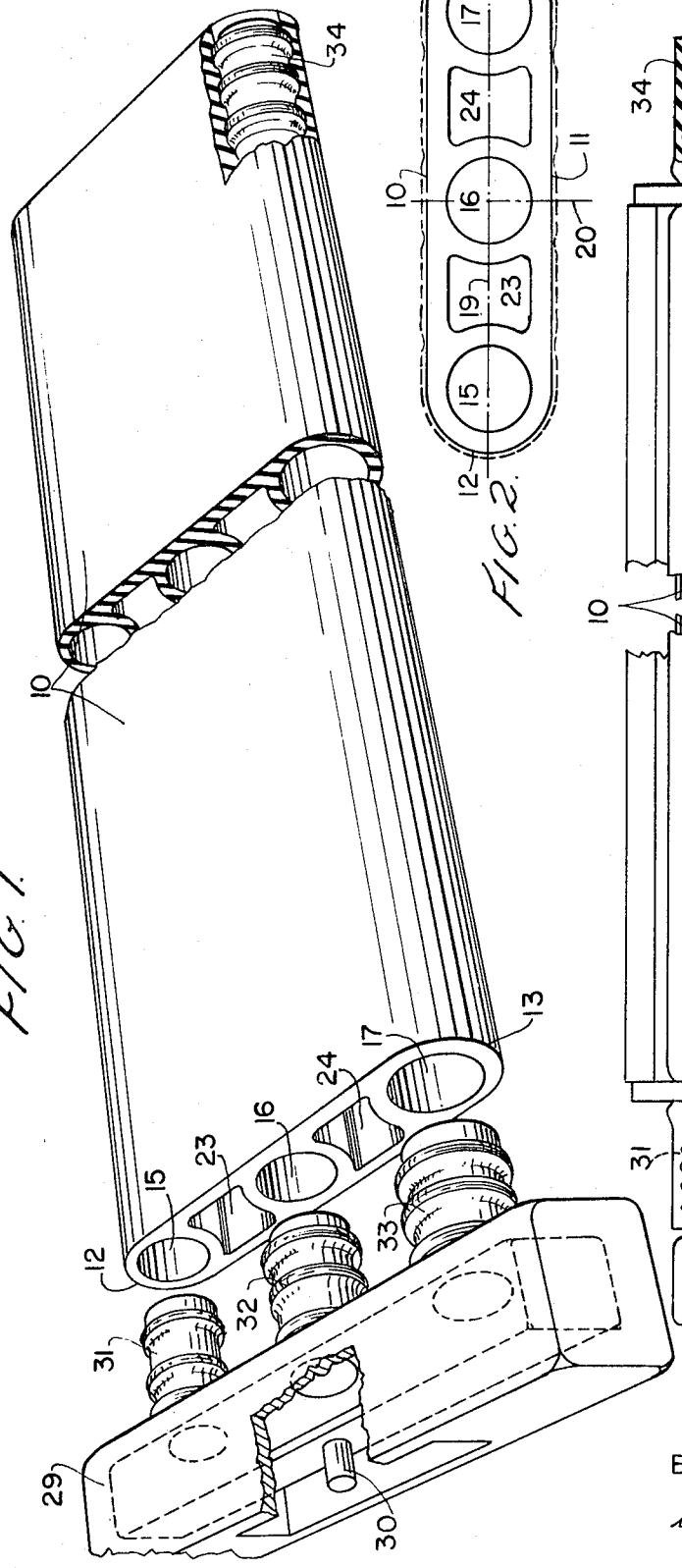


FIG. 1.




FIG. 2.

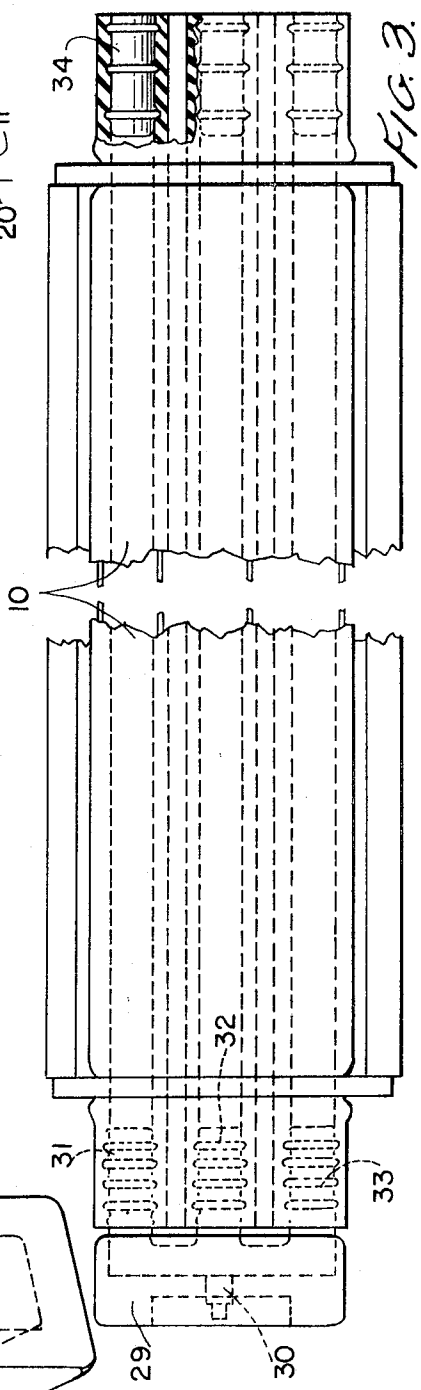


FIG. 3.

Inventor
ROBERT E. SMITH
BY
Robert S. Kahn
Atty.

# CORE FOR CASTING CONCRETE SLABS

This invention relates to a non-cylindrical core construction providing correspondingly shaped non-cylindrical passages throughout the length of a concrete slab during casting thereof. Slabs to which this invention relate are frequently cast in lengths up to the order of about 60 feet. Such slabs may be provided in various widths and thicknesses, the width in all such cores being substantially greater than the thickness.

Thus slabs of 8 × 16 or 8 × 24 inches in various lengths have been known for a long time. As a rule in such slabs, cylindrical passages throughout the entire length of a slab are provided not only to save on concrete but also to improve on the beam characteristics of the cast slab. An example of such a slab is disclosed in U.S. Pat. No. 2,299,111. Such slabs are usually reinforced with long steel strands.

The trend of the art has been in the direction of slabs whose width to thickness ratio is such as to necessitate the use of flattened non-cylindrical passages. For example, a slab having a thickness of 4 or 6 inches with a width up to about 24 inches should have a desired volume of void to concrete. Providing a multiplicity of cylindrical, laterally offset passages in such a slab creates production complications.

In the casting of concrete slabs, a core for creating a passage or channel must be maintained accurately in position during the casting and curing process. Since the thickness of concrete between the external surfaces of the finished slab and the internal surface of such slab must be accurately controlled to maintain the strength characteristic of the finished slab, it is not only necessary to control the lateral dimensions of a core throughout the length thereof during casting but in addition it is necessary to control the location of a core within the casting form.

It is also desirable to be able to vary somewhat the lateral dimensions of a core. When a casting form has one or more cores present therein and has its casting region filled with concrete mix, the form and contents, after vibrating procedure, are cured in a humid atmosphere in a kiln at a temperature of about 160° F. for a suitable time, usually about seven or eight hours. Prior to filling a form with mix, a core is preferably handled in such a fashion as to increase somewhat its lateral dimensions sufficiently so that the enlarged core on both sides of the bulk-head opening creates a seal to retain concrete mix. This lateral enlargement, when accomplished, is usually obtained by inflating with compressed air, assuming the core is susceptible to such treatment. Upon completion of the cure the casting form is removed from the kiln and will require stripping. Before a cured casting is removed from a casting form, it is customary to pull out the core or cores, this being accomplished by longitudinal movement of the cores. Once a core or cores are removed, the cured casting is removed from its form by spreading the sides of the form sufficiently to effect casting release.

Removal of a core from a cured casting involves initially the reduction of the lateral core dimensions to normal or even below normal. When a core has been inflated to effect a desired increase in transverse dimensions, the first step is to deflate the core and permit the elasticity of the core to restore the core dimensions to normal. When this occurs, there may be some movement of the core exterior surfaces from the interior slab passage walls. However, for the most part, reliance is had, in connection with core removal from the casting, upon the fact that when a core body is pulled at one end, there will be a significant elongation of the core body in response to the pull with a consequent reduction in core transverse dimensions. Sometimes when a core body sticks within a cured slab, it may be advisable to alternately inflate and deflate the core to aid in core removal.

In accordance with the present invention, a molded or extruded core of elastic material is provided with longitudinal passages of two different shapes. Certain passages have a cylindrical cross section along the entire length of core and are adapted to be sealed so that air at a desired pressure may be introduced, maintained therein or removed therefrom.



When air at a suitable pressure is introduced in such cylindrical passages, the elastic core body material reacts by lateral expansion. In addition to the cylindrical passages for compressed air, the invention provides for supplementary air passages throughout the length of the core. Such supplementary passages are preferably open to atmosphere at all times and function to control the intensity and direction of lateral expansion forces emanating from the compressed air passages. While such supplemental passages in their simplest form are open to atmosphere, they may be considered as providing a generally constant low level resistance to lateral by directed forces through the core body, the resistance level however being substantially lower than the resistance of the core material which would normally be present in the absence of such supplementary passages. Instead of leaving such supplementary passages open to atmosphere, it is possible to seal such passages and have air therein at some desired low pressure.

The supplementary control passages have such a transverse area and shape and will have such an orientation as to provide desired lateral expansion characteristics of the entire core when the cylindrical passages are filled with compressed air.

The core material itself is preferably of rubber (natural or synthetic) or of plastic material having suitable characteristics with regard to elasticity, flexibility, air retention, chemical inertness, resistance to ageing and general durability for wear and tear. For the most part, in connection with casting concrete slabs, rubber having a Durometer hardness of the general order of about 70, plus or minus about 10, has been found to be good. The hardness and elasticity may vary depending upon lateral core dimensions, desired wall thickness, air pressures to be used and manufacturing tolerances.

The transverse shape of passages for containing compressed air will preferably be circular although some departure may be permissable. The transverse shape of the supplementary passages will generally be non-circular and the dimensions, shapes, location and orientations are selected that a desired wall thickness between the inside wall of a compressed air passage on the one hand and the core exterior or the inside wall of a suitable passage may be kept within limits.

By having a suitable ratio of void to transverse sectional area of the entire core, the weight, lateral expansion characteristics and longitudinal stretch core characteristics may be adjusted so that as a whole, a long core will have desired characteristics for use in connection with creating longitudinal passages in concrete slabs. By relying upon a homogenous core material such as rubber for example, a core having an unlimited life may be provided, the life of such a core being generally determined by wear and tear in actual use. Such a core may be easily handled and will have sufficient longitudinal stretch and elasticity so that removal of a core from a casting may be readily accomplished.

In accordance with the present invention, an elongated core is preferably provided with a header at one end to interconnect the compressed air inflatable passages within the core and also preferably includes means for accurately maintaining the air pressure within the cylindrical core passages to a desired maximum value during the casting and curing operation. Thus, a core having means for equalizing pressures within the inflatable core passages will enable an operator to handle the entire construction as one core, both physically and functionally insofar as lateral dimensional expansion and contraction are concerned.

The invention will now be described in connection with the drawings wherein:

FIG. 1 is an exploded perspective view of a core body embodying the present invention, certain parts being cut away to illustrate the construction must clearly.

FIG. 2 is a transverse section of the core body embodying the present invention, the dotted lines illustrating approximately the inflated shape of the core body.

FIG. 3 is a plan view showing the new core body embodying the present invention installed in a casting frame, certain parts being cut away.

The core body sections illustrated in FIGS. 1 and 2 are shown in a deflated or normal condition and has generally flat top face 10, generally flat bottom face 11 with outwardly curved sides 12 and 13 connecting the top and bottom faces of the core. A core body may have any length up to the order of about 60 feet. The width and thickness of the core may be selected as desired. A core body such as illustrated in FIG. 1 may have as many alternate cylindrical passages and non-cylindrical passages, all in laterally offset relation, as desired. A number of separate core bodies may be used in laterally spaced relation in a casting form adapted for casting slabs up to any desired width and having any desired thickness. For example, U.S. Pat. No. 3,416,272 granted Dec. 17, 1968 shows a slab having two separate non-cylindrical passages in laterally offset relation to which the invention may be applied during casting of such slabs. As illustrated here, passages having circular sections 15, 16 and 17 are provided, the center line of such circular sections lying along a transverse line 19 extending midway between top and bottom faces 10 and 11.

It is understood that a length of core will have cylindrical passages with center line 19 being part of a plane. For convenience, however, the various portions of the core will be described as shown in section with the understanding that all such portions of the core will form parts of planes and extended surfaces. Halfway between curved sides 12 and 13 is a line 20 extending perpendicularly between 10 and 11 and constituting a vertical center line with line 19 functioning as a horizontal center line.

Depending upon the elasticity of the core body material and the relationship between various dimensions, cylindrical passages 15, 16 and 17 are so dimensioned relative to the exterior core surfaces as to provide for a prescribed wall thickness for as large a portion of the circumference of each cylinder as possible. As an example with rubber having a Durometer of between about 65 and 75, and the dimensions hereinafter given, the wall thickness may be, when deflated, about one-fourth of an inch or 5/16ths. Some portions of wall thickness between the cylindrical passages and top and bottom faces 10 and 11 may be greater than the wall thickness at sides 12 or 13. The lateral spacing between adjacent cylindrical passages 15 and 16 and 17 is great enough so that non-cylindrical supplementary longitudinal passages 23 and 24 are accommodated. Each of these supplementary passages 23 and 24 is so dimensioned and so shaped that the intervening wall between cylindrical and non-cylindrical passages are maintained for the most part at the desired wall thickness. Insofar as all the passages are concerned, both cylindrical and non-cylindrical passages are so dimensioned with respect to outer faces 10 and 11 of the core so that the wall thickness is maintained along planes parallel to the plane containing center line 20.

Certain regions obvious on inspection will have a substantially greater wall thickness than what might be termed as normal. In use, if passages 15, 16 and 17 are inflated with suitable air pressure, such as for example 25 or 50 pounds per square inch, while normal atmospheric pressure is maintained in non-cylindrical passages 23 and 24, the core material will be expanded. The expanded shape of the core under desired pressure for slab casting is shown in dotted lines. The precise outline of the core when deflated will not be maintained precisely when inflated. So long as the core outline and the longitudinal passage in a cast slab is maintained constant, precise geometrical congruence need not necessarily be maintained.

It is possible to modify the shape of non-cylindrical passages 23 and 23 so that the four rounded corners of these passages can be extended outwardly into the massive wall portions of the core. Sharp corners in the shapes of sections should be avoided. Some lack of correspondence between the deflated and inflated shapes improves the separation of core from concrete when deflating of core material occurs.

It is desirable for facilitating the use of a core in a slab casting operation to provide a common means for introducing air into or removing compressed air from each of the circular passages. At what might be termed the live end of an entire core, header structure 29 is provided for fitting into one end of each cylindrical passage 15, 16 and 17. A header may be made of plastic, aluminum or other metal and may have valve 30 and cylindrical stub portions 31, 32 and 33 extending from the header proper for insertion into the ends of core cylindrical passages. The header and core are firmly secured together by cementing the core to the header stubs. As an example, epoxy cement may be used to provide a tight strong joint. Non-cylindrical core passages 23 and 24 may or may not be sealed and in any event are maintained at substantially normal atmospheric pressure.

The dead end of each of the cylindrical passages in the core body is sealed with suitable plugs 34 extending into the end portions of a circular passage. Such plugs may be of rubber or plastic and should be strong enough to withstand the compressed air when the core is to be inflated.

In an exemplary structure, the width along line 19 of a core way 7 3/16ths inches with the thickness between faces 10 and 11 one and 3/16ths inches. The radius of a circular passage was 11/16ths inches while the distance between centers of passages 15 and 16 was 2 and 11/16ths inches. The width of non-cylindrical passage 23 along the plane corresponding to center line 19 was 11/16ths inches. Each corner of non-cylindrical passage 23 is generated by a one-fourth inch radius curve with the widest portion of such passage about midway between center line 19 and the top or bottom of passage 23 having a width of about 13/16ths inch. The dimensions given are merely by way of example and may be varied.

In order to maintain a substantially constant air pressure within the cylindrical core passages during curing, it is preferred to embody means for allowing a fixed rate of escape of compressed air. As is disclosed in U.S. Pat. No. 3,306,568, excess pressure air relief means are provided whereby a controlled leakage of air prevents significant increase in air pressure due to the rise in temperature of the core and its air content during curing. Any other means for maintaining a generally constant air pressure within the cylindrical air passages in the core may be used.

A core structure when used in a casting form will extend through bulk-heads defining the ends of the casting region. The rear end portion of a core containing the plugs will not be laterally expanded and should therefore extend beyond a bulk-head. In practice, a solid rubber plug within a cylindrical core passage is vulcanized to the rubber core material at a passage end and may have a length longitudinally of the core for about two or three inches, although the exact length is unimportant.

At the front or forward end of a core, the manifold stub portions extend into the appropriate ends of the cylindrical passages of the core and may have a length of about 2½or 3 inches. The entire front end portion of the core body carrying the manifold may extend beyond the live bulk-head outside of a casting form for a distance of 4 or 5 inches. The core body when laterally expanded will have laterally expanded portions on both sides of all bulk-heads. The casting form will thus be sealed against leakage of concrete. It is possible to have a long core extend through several bulk-heads in one long casting form. In all instances, the exterior surface of a core should be smooth and so dimensioned that a core in deflated condition may be moved into or pulled out from the casting region through bulk-heads. Such a core structure may be easily and simply handled in a manner generally resembling a conventional cylindrical core.

A core body of particular dimensions in normal deflated condition may be variously inflated to somewhat different dimensions, depending upon the air pressure used. Thus it may be possible to increase the over all lateral dimensions of a core by as much as 10 percent to accommodate some variations in lateral dimensions of the slab passages to be provided.

A core embodying the present invention is easy to use and can withstand the rough handling usually present in a plant making concrete slabs. The new core has sufficient body so that a long length can be readily handled. Most of the expan-

sive force due to compressed air in the core cylindrical passages will be directed to expand the core laterally. While some core elongation may occur in response to air pressure, this will be inconsequential due to the great ratio of core length to core transverse dimensions.

The valve for controlling air flow into or from the header of the core should be susceptible to being closed for air retention or being open for deflation and during core removal from a casting form. The valve should have sufficient air capacity so that rapid air flow is possible.

While the ratio of void to core sectional area may range over limits from about 25 percent to as much as 70 percent, a preferred range is from about 40 percent to about 60 percent. The ratio will determine the magnitude of lateral expansion of a core in response to a definite air pressure. In general, the lateral expansion of a core due to compressed air should be at least in the order of about one-eighth of an inch, this being measured on each side of the vertical and horizontal center planes so that as between the top and bottom faces for example, the total increase in core thickness will be about one-fourth inch, the same being true for the total width between the curved sides of the core. Upon deflation, a core will tend to return to its normal transverse dimensions and thus to an appreciable extent may pull away from the concrete inner surface of a passageway in the slab. As a rule, such core behavior will make it easier to pull the core from the casting. When a core is subject to tension, as when pulling, the longitudinal force is sufficiently great to cause a decrease in lateral core dimensions.

I claim:

1. A core for use in casting concrete slabs ranging in length up to as much as 60 feet, said core having an elongated body of homogeneous elastic material substantially immune to temperatures of the order of about 160° F., said core body having a length sufficiently great so that portions of said core body may extend through bulk-heads beyond the casting region, said core body in transverse section being shaped to provide generally flat top and bottom faces and outwardly curved sides and a plurality of separate, similar, cylindrical passages in laterally offset relation longitudinally of the core lengths, said passages being between top and bottom core faces, said core having a supplementary passage between each pair of adjacent cylindrical passages, each such supplementary passage extending the full length of the core body and having a non-circular section, sealing means at one end of each said cylindrical passage for closing the same, header means at the other end of each said cylindrical passage for interconnecting said passages, said supplementary passages being open to atmosphere, said core, when the air pressure within said cylindrical passages is great enough, laterally expanding, the relative sectional areas of the various passages and the relative locations of such passages causing said expanded core shape to be generally congruent to the normal core shape, said core, upon release of air in said cylindrical passages, contracting and pulling away from the cured concrete so that when said core is pulled from the casting, the normal core contraction, coupled with additional core contraction resulting from tension on said core, incident to removal, facilitates such removal.

2. The construction according to claim 1 wherein said core material is of rubber having a Durometer hardness of about 70.

3. The construction according to claim 2 wherein the core wall thickness about a major portion of the passages is about 5/16th inch whereby air pressure as low as about 25 pounds per square inch may be used.

4. A core construction according to claim 1 wherein said core has a manifold structure with pipe stub portions fitting into the free other ends of cylindrical passages only, each non-cylindrical passage being open to atmosphere, said core being adapted to be handled as a unitary structure.

5. A core construction according to claim 1 wherein the ratio of void to core sectional area may range from about 25 percent to as much as about 70 percent.

6. A core construction according to claim 5 wherein the ratio of void to core sectional area is from about 40 to about 60 percent.

* * * * *