(12) INTERNATIONAL APPLICATION PUBLISHED UNDER THE PATENT COOPERATION TREATY (PCT)

(19) World Intellectual Property Organization
International Bureau

(43) International Publication Date
20 November 2008 (20.11.2008)

PCT

(10) International Publication Number
WO 2008/140161 A1

(51) International Patent Classification:
G11B 5/02 (2006.01)

(21) International Application Number:
PCT/KR2007/005533

(22) International Filing Date:
2 November 2007 (02.11.2007)

(25) Filing Language: Korean

(26) Publication Language: English

(30) Priority Data:
10-2007-0047439 16 May 2007 (16.05.2007) KR

(71) Applicant *(for all designated States except US)*: **INHA INDUSTRY PARTNERSHIP INSTITUTE** [KR/KR]; Inha University, 253, Yonghyun-dong, Nam-gu, Incheon 402-823 (KR).

(72) Inventor; and

(75) Inventor/Applicant *(for US only)*: **YOU, Chun Yeol** [KR/KR]; Dong-A Apt. 115-1001, Dongchun-dong, Yeonsu-gu, Incheon 406-130 (KR).

(74) Agents: **KWON, Hyuk-Soo** et al.; 3rd Fl., 827-25 Yeoksam-dong, Kangnam-ku, Seoul 135-080 (KR).

(81) Designated States *(unless otherwise indicated, for every kind of national protection available)*: AE, AG, AL, AM, AT, AU, AZ, BA, BB, BG, BH, BR, BW, BY, BZ, CA, CH, CN, CO, CR, CU, CZ, DE, DK, DM, DO, DZ, EC, EE, EG, ES, FI, GB, GD, GE, GH, GM, GT, HN, HR, HU, ID, IL, IN, IS, JP, KE, KG, KM, KN, KP, KZ, LA, LC, LK, LR, LS, LT, LU, LY, MA, MD, ME, MG, MK, MN, MW, MX, MY, MZ, NA, NG, NI, NO, NZ, OM, PG, PH, PL, PT, RO, RS, RU, SC, SD, SE, SG, SK, SL, SM, SV, SY, TJ, TM, TN, TR, TT, TZ, UA, UG, US, UZ, VC, VN, ZA, ZM, ZW.

(84) Designated States *(unless otherwise indicated, for every kind of regional protection available)*: ARIPO (BW, GH, GM, KE, LS, MW, MZ, NA, SD, SL, SZ, TZ, UG, ZM, ZW), Eurasian (AM, AZ, BY, KG, KZ, MD, RU, TJ, TM), European (AT, BE, BG, CH, CY, CZ, DE, DK, EE, ES, FI, FR, GB, GR, HU, IE, IS, IT, LT, LU, LV, MC, MT, NL, PL, PT, RO, SE, SI, SK, TR), OAPI (BF, BJ, CF, CG, CI, CM, GA, GN, GQ, GW, ML, MR, NE, SN, TD, TG).

Published:
— *with international search report*

(54) **Title:** DOMAIN WALL MOVEMENT MEMORY DEVICE HAVING YOKE PATTERN AND METHOD OF FORMING THE SAME

[Fig. 5]

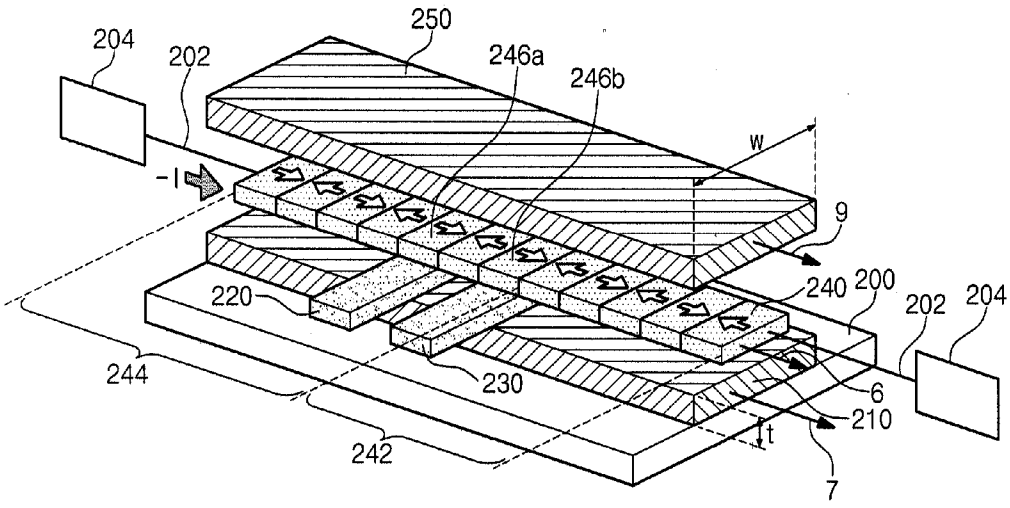

(57) **Abstract:** Provided are a magnetic domain wall movement memory device having a yoke pattern and a method of forming the same. The magnetic domain wall movement memory device includes a data storage pattern including a plurality of magnetic domains, interconnections connected to both ends of the data storage pattern, and at least one yoke pattern on one side of the data storage pattern.

WO 2008/140161 A1

Description

DOMAIN WALL MOVEMENT MEMORY DEVICE HAVING YOKE PATTERN AND METHOD OF FORMING THE SAME

Technical Field

[1] The present invention disclosed herein relates to a memory device, and more particularly, to a magnetic domain wall movement memory device.

Background Art

[2] The present invention disclosed herein relates to a memory device, and more particularly, to a magnetic domain wall movement memory device.

[3] Examples of memory devices include dynamic random access memory devices (DRAMs), static random access memory devices (SRAMs), flash memory devices, and magnetic hard disk drives. A flash memory is one kind of non-volatile semiconductor devices. However, manufacturing costs of the flash memory are expensive, and it is difficult to manufacture a large capacity flash memory. A magnetic hard disk driver is advantageous in that it has non-volatile characteristics and a high recording density. However, the magnetic hard disk driver is subject to an external impact because it has a head that mechanically is moved. Therefore, the magnetic hard disk driver is not suitable for a mobile storage device.

Disclosure of Invention

Technical Problem

[4] The present invention provides a memory device that can be used for a large capacity memory device, be protected against an external impact, and realize a high-speed performance.

[5] The present invention also provides a method of forming a memory device that can be used for a large capacity memory device, be protected against an external impact, and realize a high-speed performance.

Technical Solution

[6] Embodiments of the present invention provide magnetic domain wall movement memory devices including a data storage pattern including a plurality of magnetic domains, interconnections connected to both ends of the data storage pattern, and at least one yoke pattern on one side of the data storage pattern.

[7] In some embodiments, the data storage pattern may include at least one of a ferromagnetic material, a ferromagnetic alloy, and a ferrimagnetic material.

[8] In other embodiments, the data storage pattern may have at least one shape of a strip line shape, a "∪" shape, and a serpentine shape.

[9] In still other embodiments, the yoke pattern may include a material which converts

an unstable static magnetic energy of a magnetic domain wall between the magnetic domains into a stable static magnetic energy.

[10] In even other embodiments, the yoke pattern may include at least one of a permalloy ferromagnetic material, a super-permalloy ferromagnetic material, and a ferromagnetic material having a vertical magnetic anisotropy.

[11] In yet other embodiments, the yoke pattern may have at least one shape of a strip line shape, a "∪" shape, and a serpentine shape.

[12] In further embodiments, the data storage pattern may be substantially parallel to the yoke pattern in a long-axis direction.

[13] In still further embodiments, the data storage pattern may be spaced about 1 nm to about 1000 nm from the yoke pattern.

[14] In even further embodiments, the yoke pattern comprises an upper yoke pattern disposed on the data storage pattern and a lower yoke pattern disposed under the data storage pattern.

[15] In yet further embodiments, the upper yoke pattern may be in contact with the lower yoke pattern.

[16] In yet further embodiments, the magnetic domain wall movement memory devices may further include a current supply circuit that is connected to the interconnections and generates a current flowing into the data storage pattern.

[17] In yet further embodiments, the magnetic domain wall movement memory devices may further include a recording electrode structure facing at least one of the magnetic domains at a side of the data storage pattern and a reproducing electrode structure facing at least another one of the magnetic domains at the side of the data storage pattern.

[18] In yet further embodiments, the recording electrode structure and the reproducing electrode structure may be disposed between the data storage pattern and the yoke pattern.

[19] In other embodiments of the present invention, methods of forming a magnetic domain wall movement memory device include forming a data storage pattern on a substrate, and forming at least one yoke pattern on the substrate, wherein the yoke pattern is formed on one side of the data storage pattern.

[20] In some embodiments, the yoke pattern may be formed of at least one of a permalloy ferromagnetic material, a super-permalloy ferromagnetic material, and a ferromagnetic material having a vertical magnetic anisotropy.

Advantageous Effects

[21] According to an embodiment of the present invention, a yoke pattern is disposed on one side of a data storage pattern. Since the yoke pattern stabilizes a static magnetic

energy of the data storage pattern, magnetic domain walls of the data storage pattern can be further rapidly moved when a current flows into the data storage pattern. That is, an operating speed of a current driven magnetic domain wall movement memory device increases due to the yoke pattern.

[22] According to an embodiment of the present invention, a recording electrode structure is disposed on one side of a data storage pattern. Since the recording electrode structure is disposed on a substrate, a current driven magnetic domain wall movement memory device can be protected against an external impact.

[23] According to an embodiment of the present invention, since a data storage pattern includes a plurality of magnetic domains, a current driven magnetic domain wall movement memory device can be used as a large capacity memory device.

Brief Description of the Drawings

[24] FIGS. 1 and 2 are conceptual views of current driven magnetic domain wall movement phenomenon.

[25] FIGS. 3 and 4 are partial enlarged views illustrating a distribution of magnetic field leakage of a magnetic domain wall between magnetic domains of a data storage pattern.

[26] FIGS. 5 through 7 are perspective views of a memory device according to an embodiment of the present invention.

[27] FIG. 8 is a perspective view of a memory device according to an embodiment of the present invention.

[28] FIG. 9 is a perspective view of a memory device according to an embodiment of the present invention.

[29] FIG. 10 is a perspective view of a memory device according to an embodiment of the present invention.

[30] FIGS. 11 through 18 are perspective views illustrating a method of forming a memory device according to an embodiment of the present invention.

Mode for the Invention

[31] Embodiments of the present invention provide magnetic domain wall movement memory devices including a data storage pattern including a plurality of magnetic domains, interconnections connected to both ends of the data storage pattern, and at least one yoke pattern on one side of the data storage pattern.

[32] In other embodiments of the present invention, methods of forming a magnetic domain wall movement memory device include forming a data storage pattern on a substrate, and forming at least one yoke pattern on the substrate, wherein the yoke pattern is formed on one side of the data storage pattern.

[33] A magnetic domain wall movement memory device includes a data storage pattern

having a plurality of magnetic domains. The magnetic domains are divided by an interface called a magnetic domain wall. Each of the magnetic domains has a different magnetization direction.

[34] The magnetization direction of each of the magnetic domains may be changed by a magnetic field applied from a recording electrode structure disposed on one side of the data storage pattern. However, the magnetization direction of one magnetic domain is either parallel or anti-parallel to that of another magnetic domain. Hence, since the magnetization directions of the magnetic domains are variable and either parallel or anti-parallel to each other, the magnetization directions of the magnetic domains may be used as binary data.

[35] Since the magnetic domains act as independent regions that can store data, a plurality of data can be recorded in one data storage pattern. In addition, since the magnetic domains are consecutively arranged with a magnetic domain wall disposed therebetween as a boundary, the magnetic domain wall movement memory device can realize a higher storage density than that of a flash memory device in which regions storing data (e.g., floating gate electrodes) must be spatially separated from each other.

[36] When a predetermined current flows into the data storage pattern, certain data recorded in a predetermined magnetic domain is sequentially moved to an adjacent magnetic domain. This phenomenon is called current driven magnetic domain wall movement phenomenon. In the current driven magnetic domain wall movement phenomenon, a position of the predetermined magnetic domain in which the certain data is recorded is changed without loss of data recorded in another magnetic domain. As the current driven magnetic domain wall movement phenomenon is used, it does not need to mechanically move a recording electrode structure like a magnetic hard disk in order to change data recorded in a predetermined magnetic domain. Hence, a memory device using current driven magnetic domain wall movement phenomenon is protected against an external impact.

[37] Particularly, data to be changed is moved toward a magnetic domain adjacent to the recoding electrode structure using the current driven magnetic domain wall movement phenomenon, and then the corresponding data is changed using the recording electrode structure.

[38] The yoke pattern contributes to an increase in a movement speed of the magnetic domain wall, thus allowing the memory device to operate at a higher speed.

[39] Hereinafter, preferred embodiments of the present invention will be described below in more detail with reference to the accompanying drawings. The present invention may, however, be embodied in different forms and should not be construed as limited to the embodiments set forth herein. Rather, these embodiments are provided so that this disclosure will be thorough and complete, and will fully convey the scope of the

present invention to those skilled in the art. In the figures, the dimensions of layers and regions are exaggerated for clarity of illustration. It will also be understood that when a layer (or film) is referred to as being "on" another layer or substrate, it can be directly on the other layer or substrate, or intervening layers may also be present. Like reference numerals refer to like elements throughout.

[40] FIGS. 1 and 2 are conceptual views of current driven magnetic domain wall movement phenomenon.

[41] Referring to FIG. 1, a data storage pattern 100 includes magnetic domains 10 and 30, and has a strip line shape. For descriptive convenience, the data storage pattern 100 is divided into only three regions. A first region 10 is a magnetic domain magnetized in a long-axis direction 6 of a strip line. A third region 30 is a magnetic domain magnetized in an opposite direction of the long-axis direction 6. A magnetic domain wall defined as a second region 20 exists between the first region 10 and the third region 30. A magnetization direction of the second region 20 (i.e., the magnetic domain wall) may not be parallel or anti-parallel to a progression direction of the strip line.

[42] The magnetization direction inside the magnetic domain wall 20 must be moved in order to move the magnetic domain wall 20 when a current is applied. Current driven magnetic domain wall movement phenomenon can be explained by physically dividing movement factors into an adiabatic term, a non-adiabatic term, a damping term, and an effective field term.

[43] As illustrated in FIG. 1, in case where the data storage pattern 100 has the strip line shape, magnetization directions of the magnetic domains can be divided into a normal direction 2 to a surface of the strip line and a plane direction 4 including the surface of the strip line perpendicular to the normal direction 2. When a current is applied to the data storage pattern 100, a magnetization direction of the magnetic domain wall 20 between the magnetic domains 10 and 30 may be deviated from the plane direction 4 including the surface of the strip line by a spin torque. The magnetization direction of the magnetic domain wall 20 may have a component of the normal direction 2.

[44] If only the adiabatic term contributes to the magnetic domain wall movement, the magnetization direction of the magnetic domain wall 20 is moved in the plane direction 4 including the surface of the strip line by the current. Then, the magnetic domain wall 20 is again moved in a direction generating a movement in the normal direction 2 by the damping term. In this case, a static magnetic energy of the data storage pattern 100 in which the magnetization direction of the magnetic domain wall 20 is in the normal direction 2 becomes an unstable state. The static magnetic energy generates a force which opposes the movement in the normal direction 2. Therefore, if only the adiabatic term contributes to the magnetic domain wall movement, the magnetic domain wall 20 may not be moved although the current is applied.

[45] If both the adiabatic term and the non-adiabatic term contribute to the magnetic domain wall movement, the effect of the damping term can efficiently cancel out when the magnetization direction inside the magnetic domain wall 20 changes due to the current. Hence, the magnetization direction is efficiently moved in the plane direction 4 including the surface of the strip line. When the magnetization direction of the magnetic domain wall 20 does not include the component of the normal direction 2, the static magnetic energy of the data storage pattern 100 becomes a stable state. The static magnetic energy may not generate a force which opposes the movement in the plane direction 4 including the surface of the strip line. Therefore, when the non-adiabatic term contributes to the magnetic domain wall movement, the magnetic domain wall can be moved by the current. That is, a current driven magnetic domain wall movement speed may depend on the non-adiabatic term.

[46] Transition-metal ferromagnetic materials (e.g., Co, Fe, Ni, etc) or their alloys (e.g., FeNi, etc) have a relatively low value of the non-adiabatic term. Therefore, the unstable static magnetic energy due to the adiabatic term needs to be stabilized.

[47] Referring to FIG. 2, when a current is applied to a data storage pattern 100a, the first region 10, the second region 20, and the third region 30 are moved in the long-axis direction 6 of the strip line due to the current driven magnetic domain wall movement phenomenon to thereby define a moved first region 10a, a moved second region 20a, and a moved third region 30a, respectively. When the current is applied to the data storage pattern 100a, the magnetization direction of the magnetic domain wall 20 is deviated from the plane direction 4 including the surface of the strip line by the spin torque. The magnetization direction of the magnetic domain wall 20a includes a component of the normal direction 2.

[48] FIGS. 3 and 4 are partial enlarged views illustrating a distribution of magnetic field leakage of a magnetic domain wall between magnetic domains of a data storage pattern. Specifically, FIG. 3 is a partial enlarged view of a magnetic field leakage when a yoke pattern does not exist, and FIG. 4 is a partial enlarged view of a magnetic field leakage when the yoke pattern exists.

[49] Referring to FIG. 3, a magnetic field leakage of a magnetic domain wall of a data storage pattern 100b has a distribution of a magnetic field (or a magnetic flux density) due to a magnetic dipole. The magnetic field leakage includes a component of a normal direction 2 perpendicular to a surface of a strip line. That is, the magnetic field leakage includes components of the normal direction 2 (i.e., a y-axis direction), a long-axis direction 6 of the strip line, and a direction 8 (i.e., an x-axis direction) perpendicular to a surface along the normal direction 2. A static magnetic energy of the data storage pattern 100b becomes unstable state due to the component of the normal direction 2. Hence, the component of the normal direction may cause an interference

factor to prevent a movement of the magnetic domain wall.

[50] Referring to FIG. 4, when yoke patterns 120c and 120d are disposed on both sides of a data storage pattern 100c, a direction and a magnitude of the magnetic field leakage of the magnetic domain wall 20a are changed on surfaces of the yoke patterns 120c and 120d and inside the yoke patterns 120c and 120d. Hence, the yoke patterns 120c and 120d can significantly reduce a static magnetic energy of the data storage pattern 100c, thereby reducing magnetic reluctance caused by an adiabatic term.

[51] FIG. 5 is perspective view of a memory device according to an embodiment of the present invention.

[52] Referring to FIG. 5, a memory device according to an embodiment of the present invention includes a data storage pattern 240, a first yoke pattern 210, and a second yoke pattern 250. The data storage pattern 240, the first yoke pattern 210, and the second yoke pattern 250 may have strip line shapes, respectively. The data storage pattern 240 is disposed between the first yoke pattern 210 and the second yoke pattern 250. A long-axis direction of the strip line of the first yoke pattern 210 is parallel to that of second yoke pattern 250. A long-axis direction 6 (i.e., a direction perpendicular to a magnetic domain wall) of the data storage pattern 240 is parallel to the long-axis directions of the strip lines of the first and second patterns 210 and 250.

[53] The first yoke pattern 210 is disposed on a substrate 200. The substrate 200 may include an insulating substrate or a semiconductor substrate. According to an embodiment of the present invention, a device driving the memory device of the present invention is disposed on the substrate 200. Insulating layers are individually disposed between the data storage pattern 240 and the first and second yoke patterns 210 and 250. The insulating layer may include a silicon oxide film or a silicon nitride film. The insulating layer is formed using a chemical vapor deposition (CVD) process or a spin coating process.

[54] The data storage pattern 240 may be formed of at least one of ferromagnetic materials, their alloys, and ferrimagnetic materials. The ferromagnetic materials may include transition-metal ferromagnetic materials such as Fe, Ni, Co, etc. The data storage pattern 240 has at least one shape of the strip line shape, a "∪" shape, and a serpentine shape. The data storage pattern 240 may include a plurality of magnetic domains and a magnetic domain wall therebetween. The data storage pattern 240 is divided into a storage region 244 and a reservoir region 242.

[55] Referring to FIG. 6, the data storage pattern 240 may have the serpentine shape. A shape of each of yoke patterns corresponds to that of the data storage pattern 240 and can be easily modified by those of ordinary skill in the art. The yoke patterns are disposed on both sides of the data storage pattern 240, respectively. Since the shape of the yoke pattern can be easily modified by those of ordinary skill in the art, detailed

descriptions about the yoke pattern will be omitted herein. A recording electrode structure and a reproducing electrode structure are disposed between one yoke pattern and the data storage pattern.

[56] Referring to FIG. 7, the data storage pattern 240 has a "∪" shape. The shape of the yoke pattern can be easily modified by those of ordinary skill in the art according to the shape of the data storage pattern 240. The yoke patterns are disposed on both sides of the data storage pattern 240, respectively. The recording electrode structure and the reproducing electrode structure are disposed between one yoke pattern and the data storage pattern 240.

[57] The first and second yoke patterns 210 and 250 may be formed of magnetic materials. The first and second yoke patterns 210 and 250 may be formed of a material that allows an unstable static magnetic energy due to a magnetic field leakage generated from the magnetic domain wall between the magnetic domains to be converted into a stable static magnetic energy. The material may include at least one of a permalloy ferromagnetic material, a super-permalloy ferromagnetic material, and a ferromagnetic material having a vertical magnetic anisotropy. The permalloy ferromagnetic material may include a magnetic alloy of Ni and Fe. Preferably, the permalloy ferromagnetic material includes about 20% Fe and about 80% Ni. The super-permalloy ferromagnetic material may include alloys of Fe, Ni, and Mo. The ferromagnetic material having the vertical magnetic anisotropy may include alloys of Fe, Co, and Pd. Each of the first and second yoke patterns 210 and 250 may have at least one shape of the strip line shape, the "∪" shape, and the serpentine shape.

[58] According to an embodiment of the present invention, again referring to FIG. 5, the long-axis direction 6 of the data storage pattern 240 may be parallel to the long-axis directions 7 and 9 of the first and second yoke patterns 210 and 250. The data storage pattern 240 is spaced about 1 nm to about 1000 nm from each of the yoke patterns 210 and 250. The first yoke pattern 210 and the second yoke pattern 250 may be different in width W. The first yoke pattern 210 and the second yoke pattern 250 may be different in thickness t.

[59] According to a modified embodiment of the present invention, the first and second yoke patterns 210 and 250 cover a portion of the data storage pattern 240. According to a modified embodiment of the present invention, the data storage pattern 240 may have a stack type structure and thus have a multi-layered structure. The first and second yoke pattern 210 and 250 may be disposed between the data storage patterns 240.

[60] According to an embodiment of the present invention, the data storage pattern 240 and the yoke patterns 210 and 250 are parallel to the substrate 200, but the present invention is not limited thereto. For example, the data storage pattern 240 and the yoke patterns 210 and 250 may be perpendicular to the substrate 200.

[61] The data storage pattern 240 includes interconnections 202 connected to both ends thereof. According to an embodiment of the present invention, the interconnections 202 connected to the data storage pattern 240 may be electrically connected to a current supply circuit 204 generating a current flowing into the data storage pattern 240.

[62] At least one of a recording electrode structure 220 and a reproducing electrode structure 230 is disposed between the data storage pattern 240 and the first yoke pattern 210. Particularly, the recording electrode structure 220 and the reproducing electrode structure 230 may be disposed between the data storage pattern 240 and the first yoke pattern 210. According to a modified embodiment of the present invention, the reproducing electrode structure 230 is disposed on a position of a side of the data storage pattern 240, and the recording electrode structure 220 is disposed on another position of the side of the data storage pattern 240. The recording electrode structure 220 may include a conductive electrode. When a current flows into the recording electrode structure 220, a predetermined magnetic domain 246a of the data storage pattern 240 facing the recording electrode structure 220 is magnetized in a specific direction. Hence, a direction of the current flowing into the recording electrode structure 220 is changed according to data stored in the data storage pattern 240. The current flowing into the recording electrode structure 220 may be a pulsed current.

[63] The reproducing electrode structure 230 may include the conductive electrode. A sensor, which senses a magnetization direction of a predetermined magnetic domain 246b of the data storage pattern 240, is disposed at the intersection of the reproducing electrode structure 230 and the data storage pattern 240. The sensor is disposed between the reproducing electrode structure 230 and the data storage pattern 240. The sensor is electrically connected to the reproducing electrode structure 230. The sensor may include a tunneling magneto resistance sensor or a giant magneto resistance sensor.

[64] The data storage pattern 240 is divided into the storage region 244 and the reservoir region 242. The storage region 244 includes a plurality of magnetic domains magnetized by the recording electrode structure 220. The reservoir region 242 temporarily stores data of the storage region 244 using current driven magnetic domain wall movement phenomenon.

[65] FIG. 8 is a perspective view of a memory device according to an embodiment of the present invention.

[66] Referring to FIG. 8, a first yoke pattern 210a and a second yoke pattern 250a are disposed on a substrate 200. A data storage pattern 240a is disposed between the first yoke pattern 210a and the second yoke pattern 250a. The data storage pattern 240a has a strip line shape. Each of the first and second yoke patterns 210a and 250a has the

strip line shape and includes a trench in a central portion thereof in a long-axis direction. The data storage pattern 240a is disposed in the trench of the first yoke pattern 210a. The second yoke pattern 250a is disposed on the data storage pattern 240a, wherein the trench of the second yoke pattern is disposed over the data storage pattern 240a.

[67] Insulating layers are individually disposed between the data storage pattern 240a and the first and second yoke patterns 210a and 250a. The insulating layer may include a silicon oxide film or a silicon nitride film. The insulating layer is formed using a CVD process.

[68] At least one of a recording electrode structure 220a and a reproducing electrode structure 230a is disposed between the data storage pattern 240a and the first yoke pattern 210a.

[69] The first yoke pattern 210a is in contact with the second yoke pattern 250a. That is, the first and second yoke patterns 210a and 250a surround the data storage pattern 240a.

[70] FIG. 9 is a perspective view of a memory device according to an embodiment of the present invention.

[71] Referring to FIG. 9, a data storage pattern 240b and a yoke pattern 210b are disposed on a substrate 200b. The data storage pattern 240b has a strip line shape. The data storage pattern 240b is disposed on the yoke pattern 210b. An insulating layer is disposed between the data storage pattern 240b and the yoke pattern 210b. A recording electrode structure 220b and a reproducing electrode structure 230b are disposed between the data storage pattern 240b and the yoke pattern 210b. The recording electrode structure 220b and the reproducing electrode structure 230b cross over the data storage pattern 240b. According to a modified embodiment of the present invention, a plurality of data storage patterns 240b are disposed on the yoke pattern 210b.

[72] FIG. 10 is perspective view of a memory device according to an embodiment of the present invention. Referring to FIG. 10, a first yoke pattern 210c and a second yoke pattern 250c are disposed on a substrate 200c. A first data storage pattern 240c and a second data storage pattern 240d are disposed between the first yoke pattern 210c and the second yoke pattern 250c. Each of the plurality of data storage patterns 240c and 240d has a strip line shape. The first data storage pattern 240c is parallel to the second data storage pattern 240d in a long-axis direction. The plurality of data storage patterns 240c and 240d are disposed on the first yoke pattern 210c. An insulating layer is disposed between the first yoke pattern 210c and the plurality of data storage patterns 240c and 240d. An insulating layer is disposed between the second yoke pattern 250c and the plurality of data storage patterns 240c and 240d.

[73] FIGS. 11 through 18 are perspective views illustrating a method of forming a memory device according to an embodiment of the present invention.

[74] Referring to FIG. 11, a yoke layer is formed on a substrate 200. The yoke layer may include a magnetic layer. The magnetic layer may be formed of at least one of a permalloy ferromagnetic material, a super-permalloy ferromagnetic material, and a ferromagnetic material having a vertical magnetic anisotropy. The permalloy ferromagnetic material may include a magnetic alloy of Ni and Fe. Preferably, the permalloy ferromagnetic material includes about 20% Fe and about 80% Ni. The super-permalloy ferromagnetic material may include alloys of Fe, Ni, and Mo. The ferromagnetic material having the vertical magnetic anisotropy may include alloys of Fe, Co, and Pd.

[75] A photoresist pattern is formed on the yoke layer. The yoke layer is etched using the photoresist pattern as a mask to form a yoke pattern 210. According to an embodiment of the present invention, the yoke pattern 210 may be formed using a damascene technique.

[76] Referring to FIG. 12, a first insulating layer 212 is formed on an entire surface of the yoke pattern 210. The first insulating layer 212 may include a dielectric. The first insulating layer 212 may include a silicon oxide film or a silicon nitride film. The first insulating layer 212 is formed using a CVD process or a spin coating process.

[77] Referring to FIG. 13, a conductive layer is formed on an entire surface of the first insulating layer 212. The conductive layer may include a metal film, a metal silicide film, and a polysilicon film. A photoresist pattern is formed on the conductive layer. The conductive layer is etched using the photoresist pattern as a mask to form a recording electrode structure 220 and a reproducing electrode structure 230. A sensor, which senses magnetization directions of magnetic domains of a data storage pattern that will be formed in a subsequent process, is disposed on the reproducing electrode structure 230. The sensor is electrically connected to the reproducing electrode structure 230. The sensor may include a tunneling magneto resistance sensor or a giant magneto resistance sensor.

[78] Referring to FIG. 14, a second insulating layer 214 is formed on the recording electrode structure 220 and the reproducing electrode structure 230. The second insulating layer 214 may include the dielectric. The second insulating layer 214 may include the silicon oxide film or the silicon nitride film. The second insulating layer 214 is formed using the CVD process or the spin coating process.

[79] Referring to FIG. 15, a magnetic layer is formed on the second insulating layer 214. A photoresist pattern is formed on the magnetic layer. The magnetic layer is etched using the photoresist pattern as a mask to form the data storage pattern 240. The data storage pattern 240 crosses over the recording electrode structure 220 and the re-

producing electrode structure 230. The data storage pattern 240 includes a plurality of magnetic domains. A magnetic domain wall exists between the magnetic domains. The magnetic domains are magnetized.

[80] Referring to FIG. 16, a third insulating layer 216 is formed on the data storage pattern 240. The third insulating layer 216 may include the dielectric. The third insulating layer 216 may include the silicon oxide film or the silicon nitride film. The third insulating layer 216 is formed using the CVD process or the spin coating process.

[81] Referring to FIG. 17, a second yoke layer is formed on the third insulating layer 216. A photoresist pattern is formed on the second yoke layer. The second yoke layer is etched using the photoresist pattern as a mask to form a second yoke pattern 250.

[82] Referring to FIG. 18, a fourth insulating layer 218 is formed on the second yoke pattern 250. The fourth insulating layer 218 may include the silicon oxide film or the silicon nitride film. The fourth insulating layer 218 is formed using the CVD process or the spin coating process.

Claims

[1] A magnetic domain wall movement memory device, comprising:
a data storage pattern including a plurality of magnetic domains;
interconnections connected to both ends of the data storage pattern; and
at least one yoke pattern on one side of the data storage pattern.

[2] The magnetic domain wall movement memory device of claim 1, wherein the data storage pattern comprises at least one of a ferromagnetic material, a ferromagnetic alloy, and a ferrimagnetic material.

[3] The magnetic domain wall movement memory device of claim 1, wherein the data storage pattern has at least one shape of a strip line shape, a "∪" shape, and a serpentine shape.

[4] The magnetic domain wall movement memory device of claim 1, wherein the yoke pattern comprises a material which converts an unstable energy state of a magnetic domain wall between the magnetic domains into a stable energy state.

[5] The magnetic domain wall movement memory device of claim 4, wherein the yoke pattern comprises at least one of a permalloy ferromagnetic material, a super-permalloy ferromagnetic material, and a ferromagnetic material having a vertical magnetic anisotropy.

[6] The magnetic domain wall movement memory device of claim 1, wherein the yoke pattern has at least one shape of a strip line shape, a "∪" shape, and a serpentine shape.

[7] The magnetic domain wall movement memory device of claim 1, wherein the data storage pattern is substantially parallel to the yoke pattern in a long-axis direction.

[8] The magnetic domain wall movement memory device of claim 1, wherein the data storage pattern is spaced about 1 nm to about 1000 nm from the yoke pattern.

[9] The magnetic domain wall movement memory device of claim 1, wherein the yoke pattern comprises an upper yoke pattern disposed on the data storage pattern and a lower yoke pattern disposed under the data storage pattern.

[10] The magnetic domain wall movement memory device of claim 9, wherein the upper yoke pattern is in contact with the lower yoke pattern.

[11] The magnetic domain wall movement memory device of claim 1, further comprising a current supply circuit that is connected to the interconnections and generates a current flowing into the data storage pattern.

[12] The magnetic domain wall movement memory device of claim 1, further comprising:

a reproducing electrode structure facing at least one of the magnetic domains at a side of the data storage pattern; and

a recording electrode structure facing at least another one of the magnetic domains at the side of the data storage pattern.

[13] The magnetic domain wall movement memory device of claim 12, wherein the recording electrode structure and the reproducing electrode structure are disposed between the data storage pattern and the yoke pattern.

[14] A method of forming a magnetic domain wall movement memory device, comprising:

forming a data storage pattern on a substrate; and

forming at least one yoke pattern on the substrate,

wherein the yoke pattern is formed on one side of the data storage pattern.

[15] The method of claim 14, wherein the yoke pattern is formed of at least one of a permalloy ferromagnetic material, a super-permalloy ferromagnetic material, and a ferromagnetic material having a vertical magnetic anisotropy.

[Fig. 1]

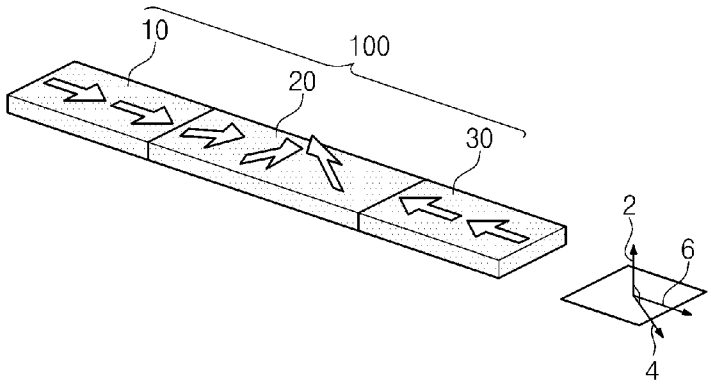

[Fig. 2]

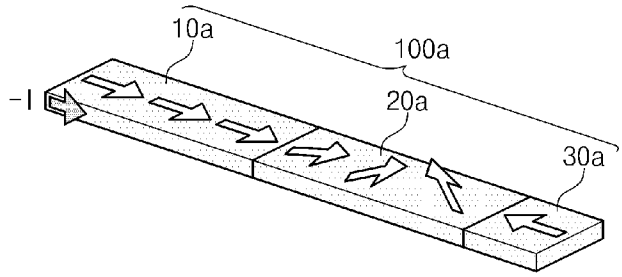

[Fig. 3]

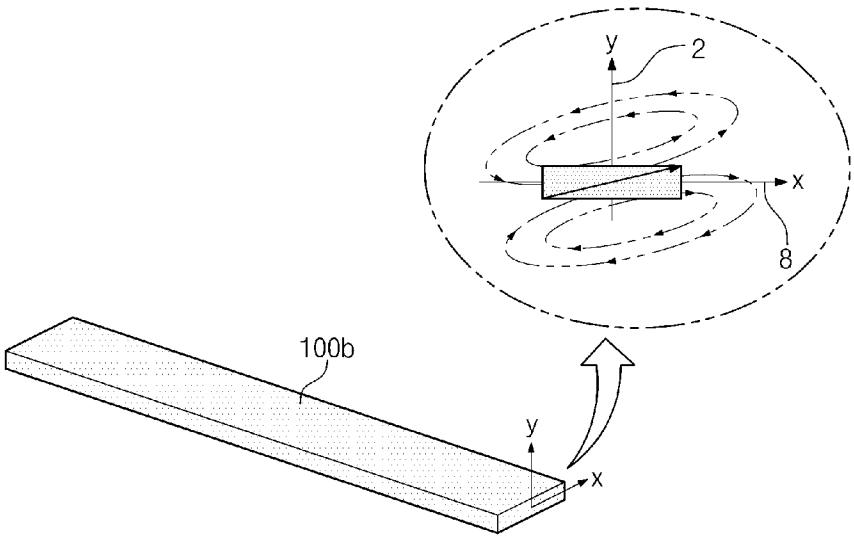

[Fig. 4]

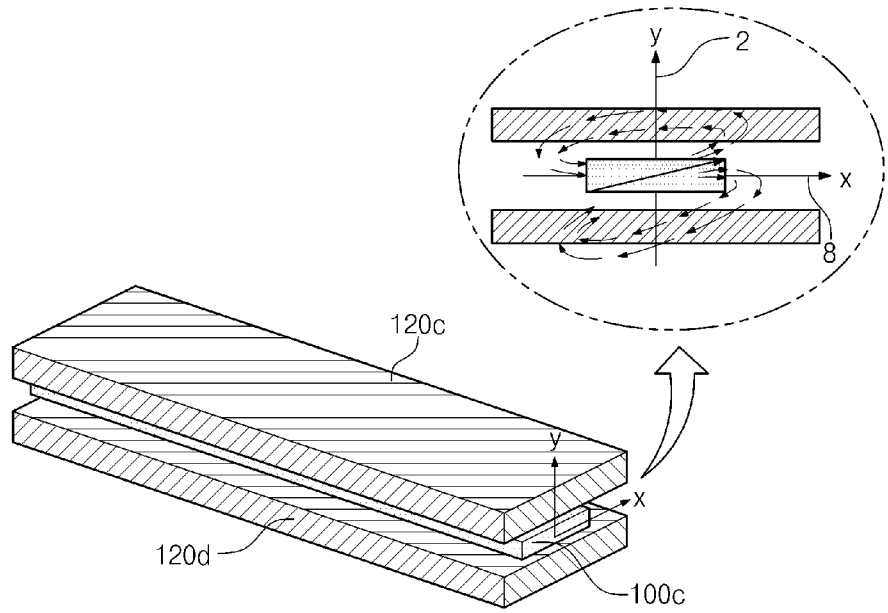

[Fig. 5]

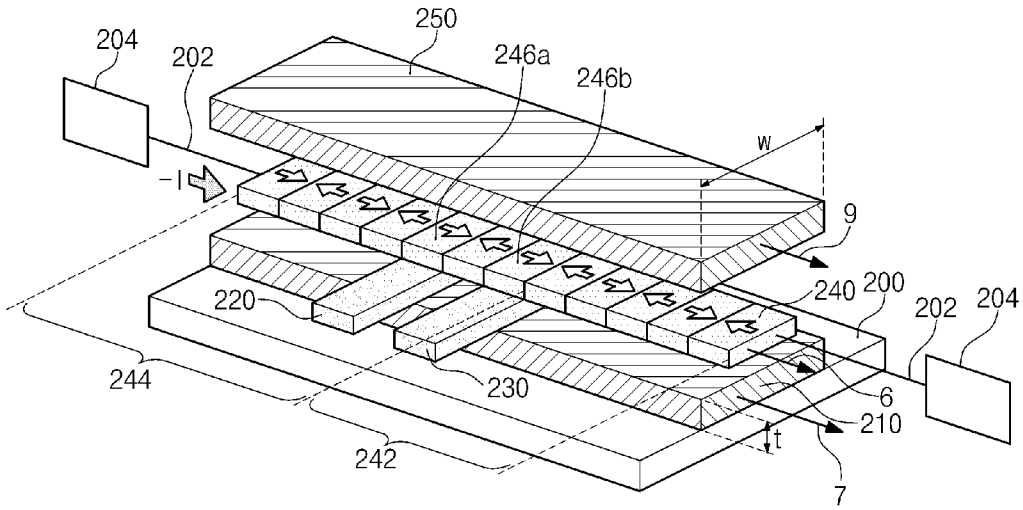

[Fig. 6]

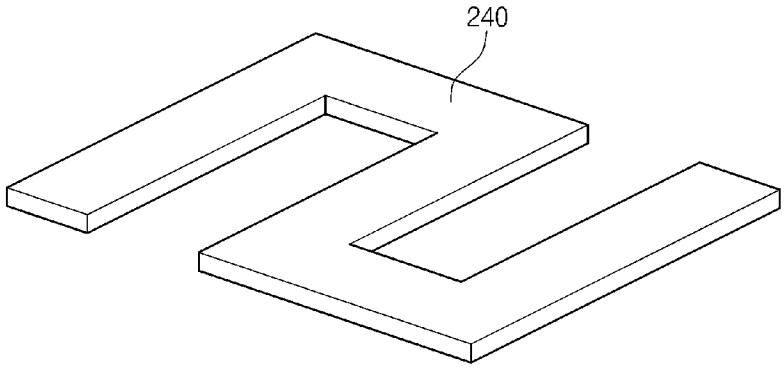

[Fig. 7]

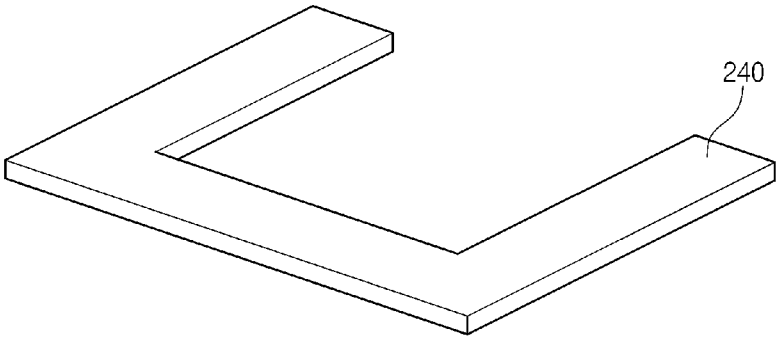

[Fig. 8]

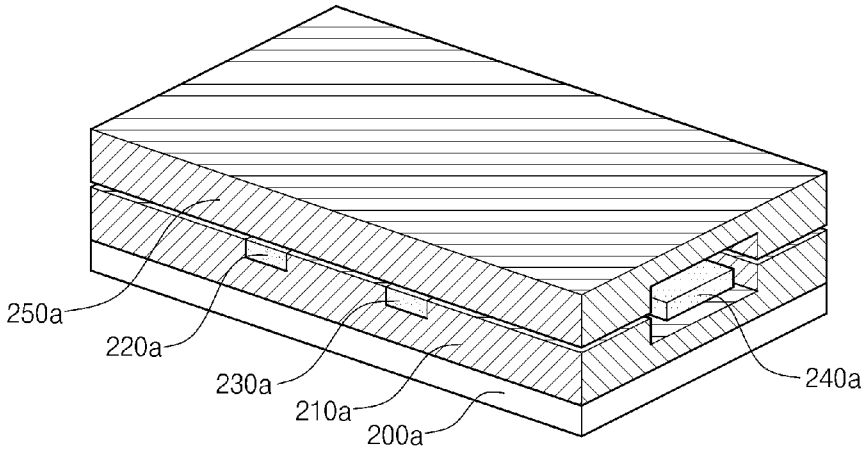

[Fig. 9]

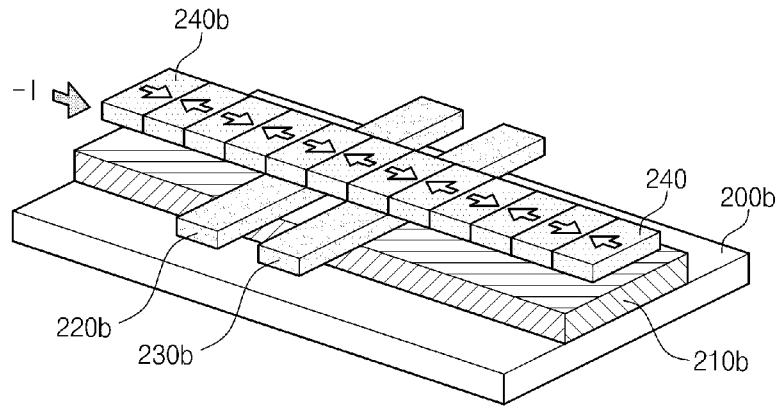

[Fig. 10]

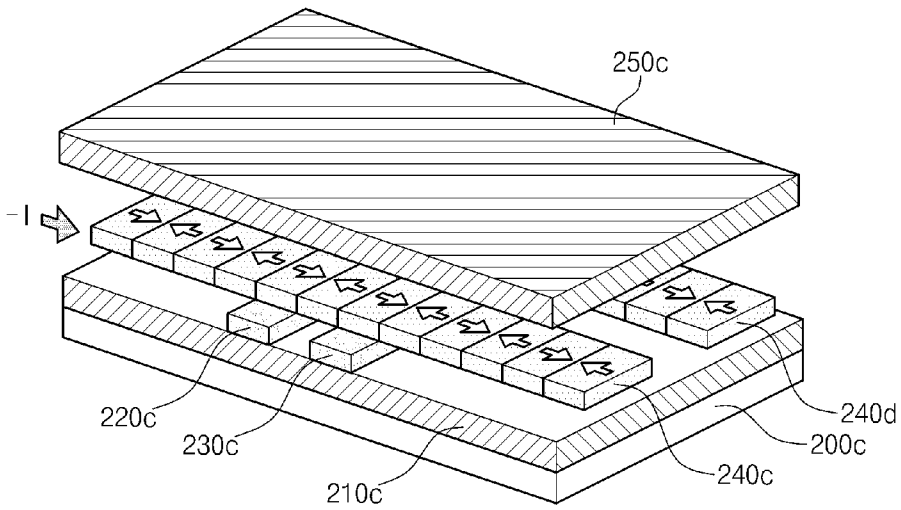

[Fig. 11]

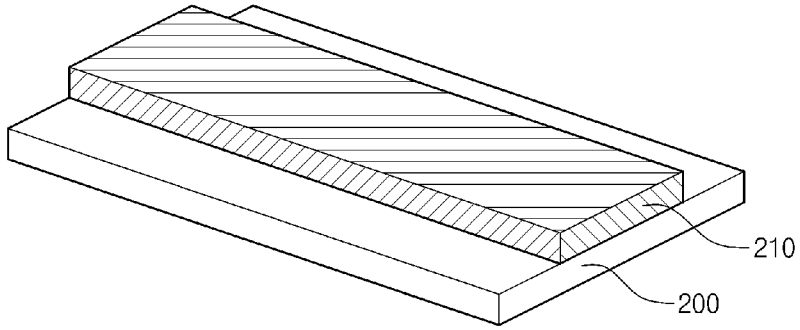

[Fig. 12]

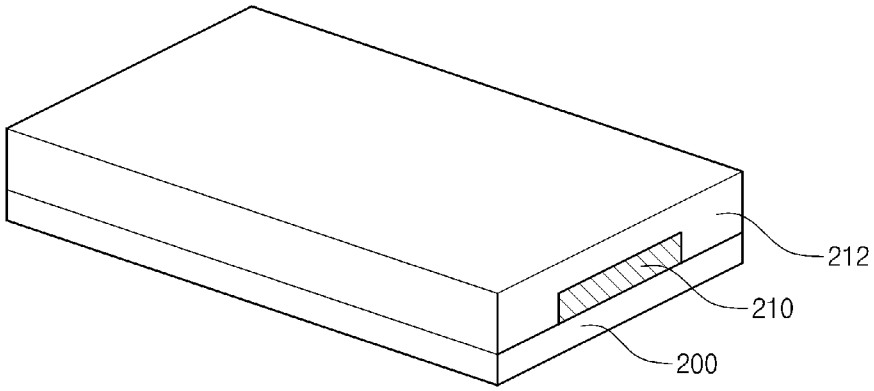

[Fig. 13]

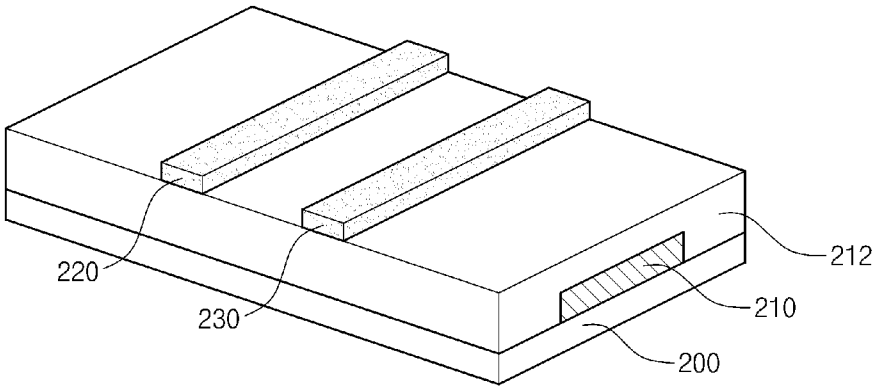

[Fig. 14]

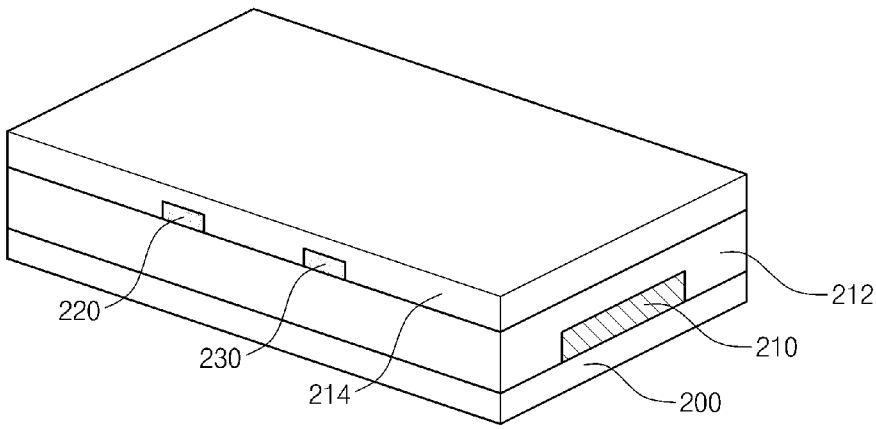

[Fig. 15]

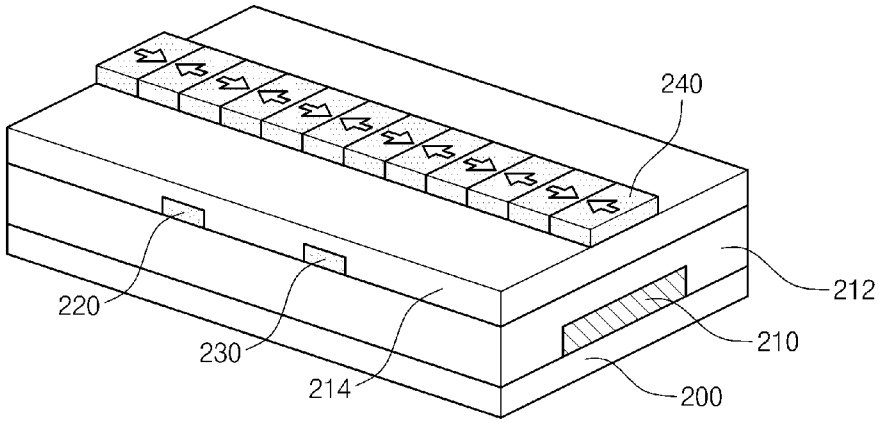

[Fig. 16]

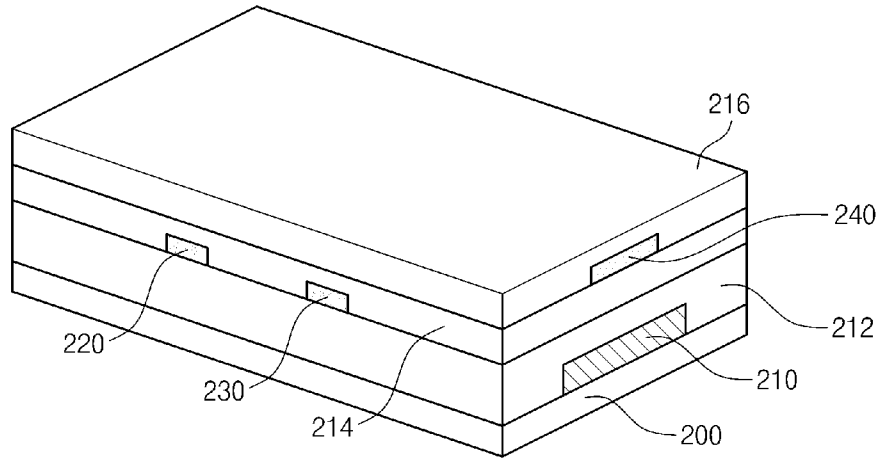

[Fig. 17]

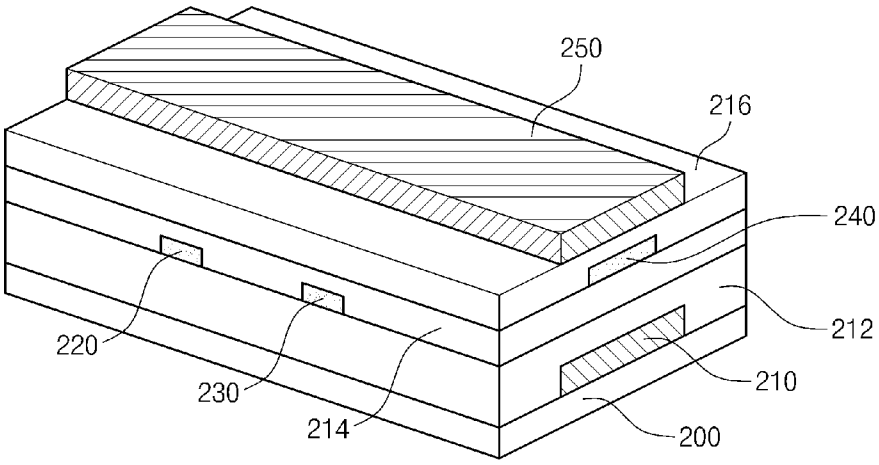

[Fig. 18]

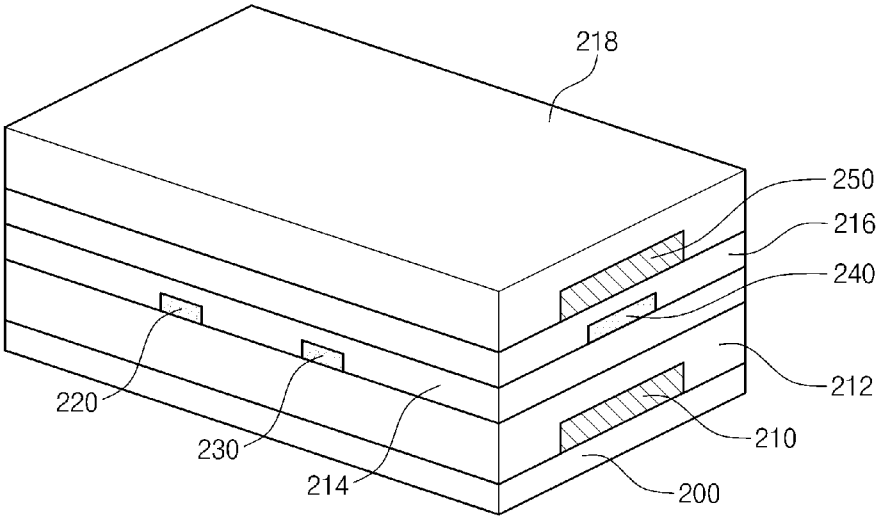

INTERNATIONAL SEARCH REPORT

International application No.
PCT/KR2007/005533

A. CLASSIFICATION OF SUBJECT MATTER

G11B 5/02(2006.01)i

According to International Patent Classification (IPC) or to both national classification and IPC

B. FIELDS SEARCHED

Minimum documentation searched (classification system followed by classification symbols)

IPC 8: G11B 5/02, G11B 5/39, G11C 11/15, G11C 19/02, H01L 21/8246, H01L 27/10

Documentation searched other than minimum documentation to the extent that such documents are included in the fields searched

Korean Utility Models and applications for Utility Models since 1975

Japanese Utility Models and application for Utility Models since 1975

Electronic data base consulted during the international search (name of data base and, where practicable, search terms used)

eKIPASS(KIPO internal) "magnetic, domain, wall, movement, strip, yoke, shield, field, leakage"

C. DOCUMENTS CONSIDERED TO BE RELEVANT

Category*	Citation of document, with indication, where appropriate, of the relevant passages	Relevant to claim No.
A	JP 2007-096119 A (SHARP CORP.) 12 April 2007. See paragraphs <48> - <90>; figure 1.	1-15
A	JP 2006-237183 A (INTERNATIONAL BUSINESS MACHINES CORP.) 07 September 2006. See paragraphs <26> - <41>; figures 1, 4.	1-15
A	US 2005/0094427 A1 (STUART S. P. PARKIN) 05 May 2005. See paragraphs [0049] - [0055]; figure 1.	1-15
A	US 2004/0252538 A1 (STUART S. P. PARKIN) 16 December 2004. See paragraphs [0050] - [0064]; figure 1.	1-15
A	JP 2007-073103 A (SHARP CORP.) 22 March 2007. See paragraphs <51> - <70>; figure 1.	1-15

☐ Further documents are listed in the continuation of Box C.

☒ See patent family annex.

* Special categories of cited documents:

"A" document defining the general state of the art which is not considered to be of particular relevance

"E" earlier application or patent but published on or after the international filing date

"L" document which may throw doubts on priority claim(s) or which is cited to establish the publication date of citation or other special reason (as specified)

"O" document referring to an oral disclosure, use, exhibition or other means

"P" document published prior to the international filing date but later than the priority date claimed

"T" later document published after the international filing date or priority date and not in conflict with the application but cited to understand the principle or theory underlying the invention

"X" document of particular relevance; the claimed invention cannot be considered novel or cannot be considered to involve an inventive step when the document is taken alone

"Y" document of particular relevance; the claimed invention cannot be considered to involve an inventive step when the document is combined with one or more other such documents,such combination being obvious to a person skilled in the art

"&" document member of the same patent family

Date of the actual completion of the international search	Date of mailing of the international search report
15 FEBRUARY 2008 (15.02.2008)	**15 FEBRUARY 2008 (15.02.2008)**

Name and mailing address of the ISA/KR

Korean Intellectual Property Office
Government Complex-Daejeon, 139 Seonsa-ro, Seo-gu, Daejeon 302-701, Republic of Korea

Facsimile No. 82-42-472-7140

Authorized officer

KIM Jong Kee

Telephone No. 82-42-481-8301

INTERNATIONAL SEARCH REPORT

Information on patent family members

International application No.

PCT/KR2007/005533

Patent document cited in search report	Publication date	Patent family member(s)	Publication date
JP 2007-096119 A	12.04.2007	None	
JP 2006-237183 A	07.09.2006	None	
US 2005/0094427 A1	05.05.2005	None	
US 2004/0252538 A1	16.12.2004	US 2004/0251232 A1	16.12.2004
JP 2007-073103 A	22.03.2007	None	