Australia Patents Act 1990

Notice of Entitlement

(to be filed before acceptance)

643833

I/We GREGORY JAMES ROGER

being authorised by HIP DEVELOPMENTS PTY LTD

of 286 PACIFIC HIGHWAY CROWS NEST 2065 NEW SOUTH WALES AUSTRALIA

the applicant in respect of an application for a patent for an invention entitled "SURGICAL SCREW"

filed under Australian Application No. 85350/91, state the following:-

Part 1 - *Must be completed for all applications.*

☐ The person(s) nominated for the grant of the patent ~~is/are the actual inventor(s)~~

or

☒ has, for the following reasons, gained entitlement from the actual inventor(s):
THE NOMINATED PERSON IS THE ASSIGNEE OF THE INVENTION FROM THE INVENTORS

Part 2 - *Must be completed if the application is a Convention application.*

☐ The person(s) nominated for the grant of the patent is/are:
the applicant(s) of the basic application(s) listed on the patent request form

or

☐ entitled to rely on the basic application(s) listed on the patent request form by reason of the following:

The basic application(s) listed on the request form is/are the first application(s) made in a Convention country in respect of the invention.

Part 3 - *must be completed if the application was made under the PCT and claims priority.*

☒ The person(s) nominated for the grant of the patent is/are:
the applicant(s) of the application(s) listed in the declaration under Article 8 of the PCT

or

☐ ~~entitled to rely on the application(s) listed in the declaration under Article 8 of the PCT by reason of the following:-~~

The basic application(s) listed in the declaration made under Article 8 of the PCT is/are the first application(s) made in a Convention country in respect of the invention.

Signed: _____ Date: 26th FEBRUARY 1993

Status: DIRECTOR

F.B. RICE & CO. PATENT ATTORNEYS

AU9185350

(12) PATENT ABRIDGMENT (11) Document No. AU-B-85350/91
(19) AUSTRALIAN PATENT OFFICE (10) Acceptance No. 643833

(54) Title
SURGICAL SCREW

International Patent Classification(s)
(51)[5] A61B 017/58 A61F 002/08 F16B 035/06

(21) Application No. : 85350/91 (22) Application Date : 30.08.91

(87) PCT Publication Number : WO92/03980

(30) Priority Data

(31) Number	(32) Date	(33) Country
PK2119	04.09.90	AU AUSTRALIA

(43) Publication Date : 30.03.92

(44) Publication Date of Accepted Application : 25.11.93

(71) Applicant(s)
HIP DEVELOPMENTS PTY LTD

(72) Inventor(s)
GREGORY JAMES ROGER; LEO ARIEH PINCZEWSKI

(74) Attorney or Agent
F B RICE & CO , 28A Montague Street, BALMAIN NSW 2041

(57) Claim

1. A surgical screw having a shank with a thread formed along the shank, the thread, in longitudinal section along the entirety of the thread, being devoid of an outermost cutting line, and a head with a generally hemispherical head portion of a diameter equal to that of the shank proximate the head or having a greater such diameter and another head portion of equal diameter tapering smoothly from the outer periphery of the first head portion down to the shank.

3. A surgical screw for retaining a bone part of a graft positioned within a hole prepared in a bone, the screw having a shank with a thread formed along the shank and a head with a generally hemispherical head portion of a diameter substantially the same as an overall diameter of the shank proximate the head, a thread without an outermost cutting line formed along the shank of the screw to locate between two bone parts forming a mechanical interlock there between without cutting into the bone parts, a drive socket concentric of the head and a longitudinally running cannulation concentric of the shank.

OPI DATE 30/03/92 APPLN. ID 85350 / 91
P AOJP DATE 14/05/92 PCT NUMBER PCT/AU91/00405

INTERNATIONAL APPLICATION PUBLISHED UNDER THE PATENT COOPERATION TREATY (PCT)

(51) International Patent Classification 5 :
A61B 17/58, A61F 2/08
F16B 35/06

A1

(11) International Publication Number: WO 92/03980

(43) International Publication Date: 19 March 1992 (19.03.92)

(21) International Application Number: PCT/AU91/00405

(22) International Filing Date: 30 August 1991 (30.08.91)

(30) Priority data:
PK 2119 4 September 1990 (04.09.90) AU

(71) Applicant *(for all designated States except US)*: HIP DEVELOPMENTS PTY. LTD. [AU/AU]; 286 Pacific Highway, Crows Nest, NSW 2065 (AU).

(72) Inventors; and
(75) Inventors/Applicants *(for US only)* : ROGER, Gregory, James [AU/AU]; PINCZEWSKI, Leo, Arieh [AU/AU]; 286 Pacific Highway, Crows Nest, NSW 2065 (AU).

(74) Agent: F.B. RICE & CO.; 28A Montague Street, Balmain, NSW 2041 (AU).

(81) Designated States: AT (European patent), AU, BE (European patent), CH (European patent), DE (European patent), DK (European patent), ES (European patent), FR (European patent), GB (European patent), GR (European patent), IT (European patent), JP, LU (European patent), NL (European patent), SE (European patent), US.

Published
With international search report.

643033

(54) Title: SURGICAL SCREW

(57) Abstract

A surgical screw (5) having a head (6) being, at least in a portion (8), hemispherical. A smooth continuous join exists betwgen the head (6) and a shank (7) of the screw (5), the head (6) being of the same, or larger, diameter as the shank (7). To drive the screw a drive socket (11) is provided concentrically within the head, and a cannulation (9) is provided concentrically of the shank (7) and it opens into the socket (11) so as to allow the screw (5) to be threaded along a guide wire (not shown) or similar. The shank (7) has a smooth or soft thread so as to provide an interlocking fixation of a bone end of a tendon graft within a prepared hole of a bone, but without damaging either bone structures. The hemispherical portion (8) provides a smooth continuous curved surface over which a graft may flex and move without fatigue or suffering stress concentrations.

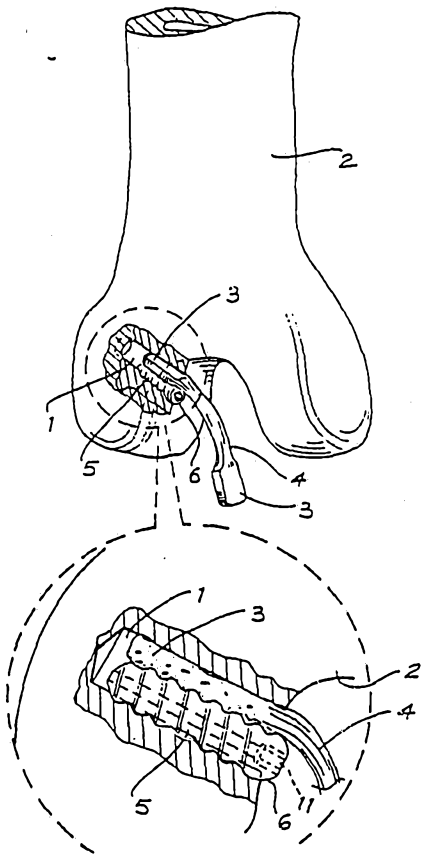

PCT/AU 91/00405
RECEIVED 15 NOV 1992

Background Art

This invention relates to surgical screws which are particularly well adapted for securing Patellar Tendon Grafts during reconstruction of the Anterior Cruciate Ligament.

Damaged Anterior Cruciate Ligaments can be repaired by grafting a Patellar Tendon physiologically bound to blocks of bone at each end, between the femur and tibia within the knee joint. The graft is inserted into a prepared hole and initially bound by a screw inserted within the hole beside the graft bone. After time the graft fuses with the bone material. While this technique works generally well problems can occur in that the head of the screw rests against the graft material and, as the knee is bent and the graft swings around, the head of the screw acts as a fulcrum for the graft and can damage the graft fibres. Other problems can occur in that conventional screw threads will cut into, and therefore damage, the graft. Also conventional screws can, in some procedures, be lost into the knee joint cavity causing a longer than necessary operation and further trauma.

Disclosure of the Invention

According to one broad form, the present invention provides a surgical screw having a shank with a thread formed along the shank, the thread, in longitudinal section along the entirety of the thread, being devoid of an outermost cutting line, and a head with a generally hemispherical head portion of a diameter equal to that of the shank proximate the head or having a greater such diameter and another head portion of equal diameter tapering smoothly from the outer periphery of the first head portion down to the shank.

AUSTRALIAN PATENT OFFICE

SUBSTITUTE SHEET

Brief Description of Drawings

By way of example only, one preferred embodiment of the invention will now be described with reference to the drawings in which:

Fig. 1 is a schematic representation of the knee joint end of a femur in which a screw according to the invention has been inserted;

Fig. 2 is a schematic sectional view of a screw incorporating the present invention;

Fig. 3 is a view, similar to Fig. 2, of a modified embodiment of the invention; and

Fig. 4 is a schematic representation of the Patellar Tendon Graft which may be anchored using a screw such as that shown in Fig. 2.

Best Mode of Carrying Out Invention

When repairing damaged Anterior Cruciate Ligaments, a blind hole 1 is drilled into the knee joint section of the femur 2 and a bone end 3 of a Patellar Tendon Graft 4 is inserted into the hole 1 where it is secured in place by driving in a screw 5. The screw head 6 lies generally under the Tendon Graft 4 and thus, once the knee is again put into normal use, the Tendon Graft 4 will be led over the screw head 6 and there will be some mutual movement between the two.

Although the screw 5 should not actually cut the bone 3 of the Tendon Graft 4, it must interlock its thread portions with both the bone 3 and inside wall of the hole 1 in order to maintain bone 3 rigidly positioned for the necessary period of time for it to fuse to the femur 2. Thus, as seen in Fig. 2 the thread form of the screw 5 is sinusoidal in longitudinal section, that is, it has no outermost cutting line which would normally helically follow the thread crest.

The screw head 6 has a surface which extends smoothly and continuously from the general shank 7 into a

hemispherical end portion 8. Central of the head 6, and aligned with the longitudinal axis of the screw 5, is a hexagonal socket 11 for accepting a mating hexagonal drive to screw the screw 5 into its position. The radius of the hemispherical end portion 8 will generally be in the order of 4mm as the typical screw for this operation will be of an overall diameter of 8mm, or thereabouts.

As shown in Fig. 3, the head portion 8 may also be of greater diameter than the screw shank 7, the head portion being a greater part-sphere with a smooth transition to a frusto-conical collar 10 tapering down to the shank 7.

Of course, the screw 5 may be used in other operative situations where a screw of significantly different diameter is preferred, the head 6 will generally remain approximately hemispherical with a smooth transition to the shank.

In order to more easily lead and align the screw 5 as it is first inserted into hole 1, a central cannulation 9 is included along the length of the screw 5. The cannulation 9 allows the screw to be handled by a large diameter Kirschener wire, or similar, thus the diameter of cannulation 9 would typically be in the order of 2.4mm.

THE CLAIMS DEFINING THE INVENTION ARE AS FOLLOWS:-

1. A surgical screw having a shank with a thread formed along the shank, the thread, in longitudinal section along the entirety of the thread, being devoid of an outermost cutting line, and a head with a generally hemispherical head portion of a diameter equal to that of the shank proximate the head or having a greater such diameter and another head portion of equal diameter tapering smoothly from the outer periphery of the first head portion down to the shank.

2. A surgical screw having a shank with a thread formed along the shank and a head with a generally hemispherical head portion of a diameter equal to that of the shank proximate the head or having a greater such diameter and another head portion of equal diameter tapering smoothly down from the outer periphery of the first head portion to the shank and wherein the screw thread is sinusoidal in longitudinal section so as to present a soft thread devoid of an outer most cutting line.

3. A surgical screw for retaining a bone part of a graft positioned within a hole prepared in a bone, the screw having a shank with a thread formed along the shank and a head with a generally hemispherical head portion of a diameter substantially the same as an overall diameter of the shank proximate the head, a thread without an outermost cutting line formed along the shank of the screw to locate between two bone parts forming a mechanical interlock there between without cutting into the bone parts, a drive socket concentric of the head and a longitudinally running cannulation concentric of the shank.

4. A surgical screw for retaining a bone part of a graft positioned within a hole prepared in a bone, the screw having a shank with a thread formed along the shank and a head with a generally hemispherical head portion of a diameter greater than an overall diameter of the shank proximate the head and another head portion tapering smoothly from the hemispherical head portion down to the shank, a thread without an outermost cutting line formed along the shank to locate

AUSTRALIAN PATENT OFFICE

PCT/AU 9 1 / 0 0 4 0 5
RECEIVED . 5 JUL 1992

between two bone parts forming a mechanical interlock there between without cutting into the bone parts, a drive socket concentrically within the head and a cannulation running concentrically within the shank.

5. An anchoring means for anchoring a tendon graft, by a bone end of a tendon graft placed within a prepared hole within a bone, the anchoring means comprising a screw having a shank with a thread formed along the shank and a head with a generally hemispherical head portion of a diameter of the shank proximate the head or having a greater such diameter and another head portion tapering smoothly down to the shank and wherein the head diameter is at least about 8mm and the thread is approximately sinusoidal in cross section so as to provide, by the part spherical head, a smooth continuous surface over which the tendon graft may flex and move in use and the thread will provide a mechanical interlock anchoring the graft to the bone without cutting surface of either.

AUSTRALIAN PATENT OFFICE

IPEA/SUBSTITUTE SHEET

85350/91

1/2

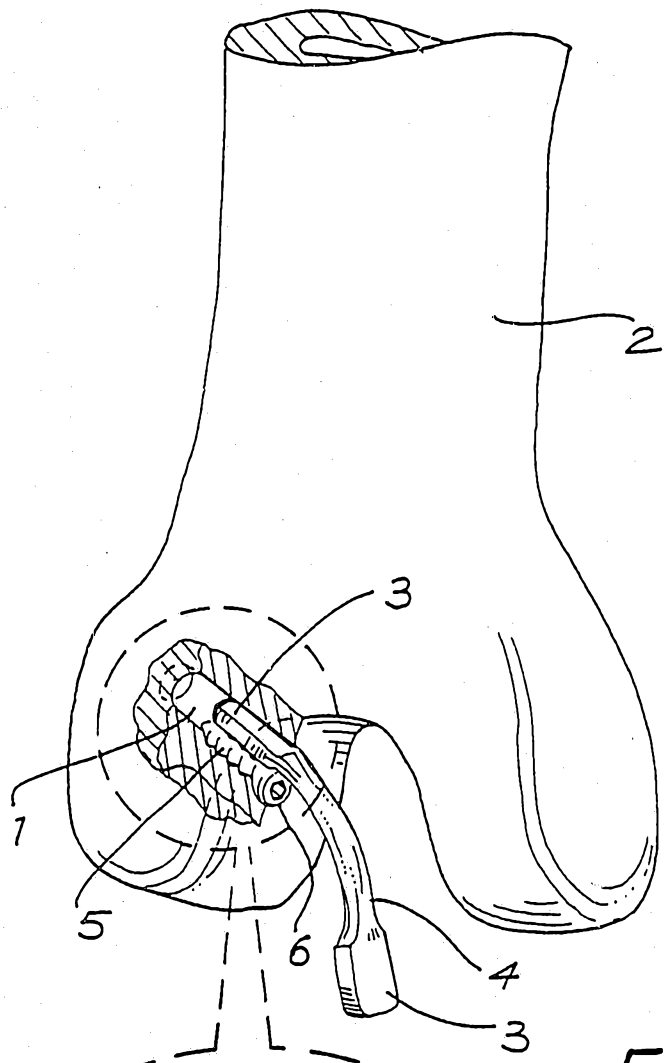

FIG. 1

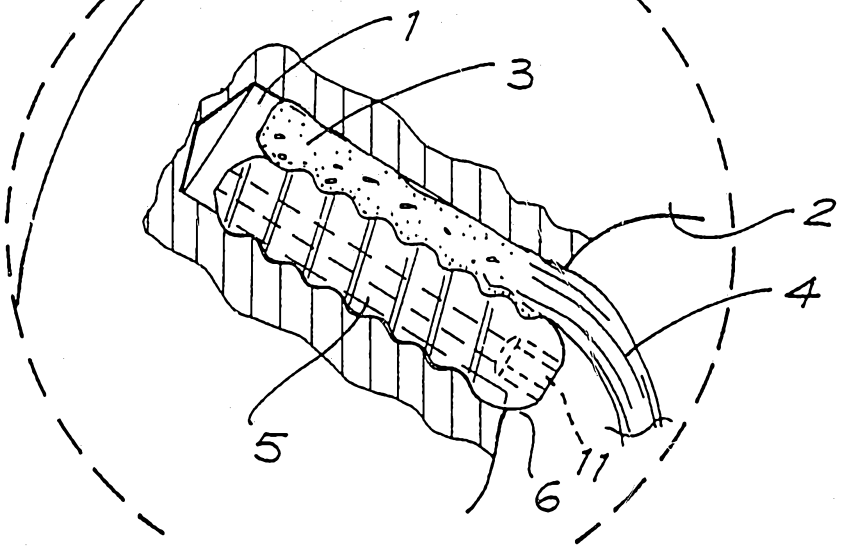

85350/91

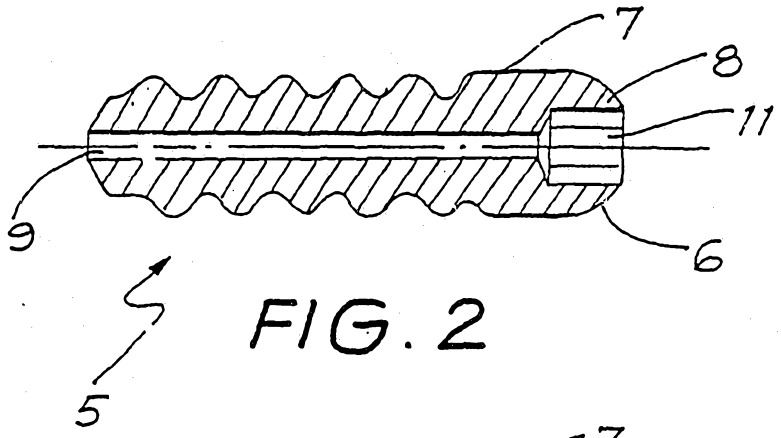

FIG. 2

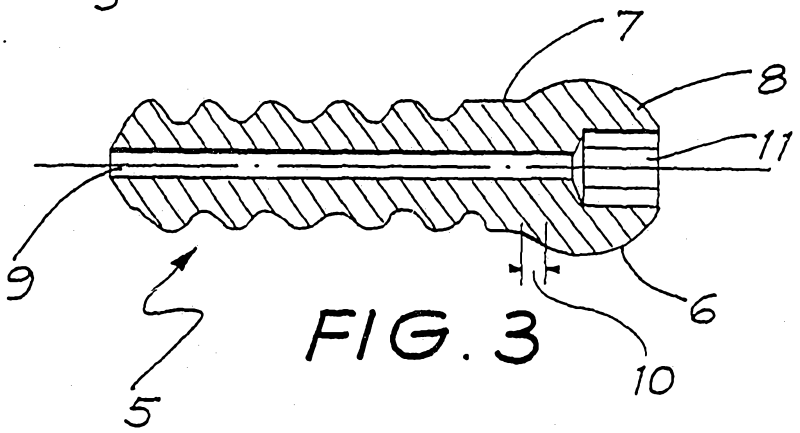

FIG. 3



FIG. 4

INTERNATIONAL SEARCH REPORT

I. CLASSIFICATION OF SUBJECT MATTER (if several classification symbols apply, indicate all)[6]

According to International Patent classification (IPC) or to both National Classification and IPC

Int. Cl.[5] A61B 17/58, A61F 2/08, F16B 35/06

II. FIELDS SEARCHED

Minimum Documentation Searched [7]

Classification System	Classification Symbols
IPC	A61B 17/58, 17/18, A61F 1/24, 2/08, F16B 35/06

Documentation Searched other than Minimum Documentation to the Extent that such Documents are Included in the Fields Searched [8]

AU : IPC as above

III. DOCUMENTS CONSIDERED TO BE RELEVANT [9]

Category*	Citation of Document, [11] with indication, where appropriate of the relevant passages [12]	Relevant to Claim No [13]
X,Y	EP,A, 374088 (GERBRUDER SULZER AG) 20 June 1990 (20.06.90). See Figs 1, 3, 4 and 6.	(1-5, 7-10)
X	AU,A, 14615/28 (FLANNERY BOLT COMPANY) 12 February 1929 (12.09.20). See Fig 1, Col 2 lines 4-12.	(1)
P,X	AU,A, 59999/90 (MINNESOTA MINING AND MANUFACTURING COMPANY) 21 February 1991 (21.02.91). See Fig 1, page 7 lines 4-11.	(1)
X	EP,A, 172130 (MECRON MEDIZINISCHE PRODUKTE GMBH) 19 February 1986 (19.02.86). See Figs 1, 4 and 5.	(1-4)

(continued)

* Special categories of cited documents : [10]

"A" Document defining the general state of the art which is not considered to be of particular relevance

"E" earlier document but published on or after the international filing date

"L" document which may throw doubts on priority claim(s) or which is cited to establish the publication date of another citation or other special reason (as specified)

"O" document referring to an oral disclosure, use, exhibition or other means

"P" document published prior t the international filing date but later than the priority date claimed

"T" Later document published after the international filing date or priority date and not in conflict with the application but cited to understand the principle or theory underlying the invention

"X" document of particular relevance; the claimed invention cannot be considered novel or cannot be considered to involve an inventive step

"Y" document of particular relevance; the claimed invention cannot be considered to involve an inventive step when the document is combined with one or more other such documents, such combination being obvious to a person skilled in the art

"&" document member of the same patent family

IV. CERTIFICATION

Date of the Actual Completion of the International Search	Date of Mailing of this International Search Report
26 November 1991 (26.11.91)	29 November 91
International Searching Authority	**Signature of Authorized Officer**
AUSTRALIAN PATENT OFFICE	A. HENDRICKSON

III. DOCUMENTS CONSIDERED TO BE RELEVANT (CONTINUED FROM THE SECOND SHEET)

Category*	Citation of Document, [11] with indication, where appropriate of the relevant passages [12]	Relevant to Claim No [13]
Y	EP,A, 317406 (LABOUREAU) 24 May 1989 (24.05.89)	(1, 2, 7, 10)
Y	WO,A, 90/08510 (ACUFLEX MICROSURGICAL INC) 9 August 1990 (09.08.90). See page 3 lines 1-4, page 16 line 14 - page 17 line 20, Figs 10 and 11.	(2-4)
A	FR,A, 2622790 (SOCIETE MATCO S.A.R.L.) 12 May 1989 (12.05.89)	

ANNEX TO THE INTERNATIONAL SEARCH REPORT ON INTERNATIONAL APPLICATION NO. PCT/AU 91/00405

This Annex lists the known "A" publication level patent family members relating to the patent documents cited in the above-mentioned international search report. The Australian Patent Office is in no way liable for these particulars which are merely given for the purpose of information.

Patent Document Cited in Search Report	Patent Family Member
EP 374088	
AU 59999/90	CA 2021577 EP 413549 JP 3092150 US 5002574
EP 172130	DE 3434807
EP 317406	FR 2623082
WO 9008510	AU 51667/90 CA 2026781 EP 411109 FI 904905
FR 2622790	