United States Patent

[11] 3,614,464

[72] Inventor **Walter V. Chumakov**
Huntingdon Valley, Pa.

[21] Appl. No. **818,216**
[22] Filed **Apr. 22, 1969**
[45] Patented **Oct. 19, 1971**
[73] Assignee. **ITE Imperial Corporation**
Philadelphia, Pa.

[54] **ARCLESS TAP- OR SOURCE-SWITCHING APPARATUS USING SERIES-CONNECTED SEMICONDUCTORS**
11 Claims, 13 Drawing Figs.

[52] **U.S. Cl.** **307/136,** 317/11
[51] **Int. Cl.** **H01h 9/30**
[50] **Field of Search** 307/133, 134, 85, 86, 87, 136, 112; 317/11.1, 11.4

[56] **References Cited**

UNITED STATES PATENTS

3,249,810	5/1966	Strom et al.	317/11.1
3,430,063	2/1969	Webb	317/11.1
3,436,646	4/1969	Prescott	317/11.1

Primary Examiner—Herman J. Hohauser
Attorney—Ostrolenk, Faber, Gerb & Soffen

ABSTRACT: Tap- or source-switching apparatus employable with high-power electrical inputs for connection to a load by means of a mechanical switch in a manner to exhibit little or no arcing contact material erosion or deterioration. A semiconductor switch is connected in series with one current-carrying contact and in parallel with another contact, and serves to establish current initiation through the semiconductor switch and to provide current interruption across that switch. The first of said current-carrying contacts is arranged to be closed prior to the closing of the semiconductor switch and the second said contact and to remain closed until after the opening of those devices.

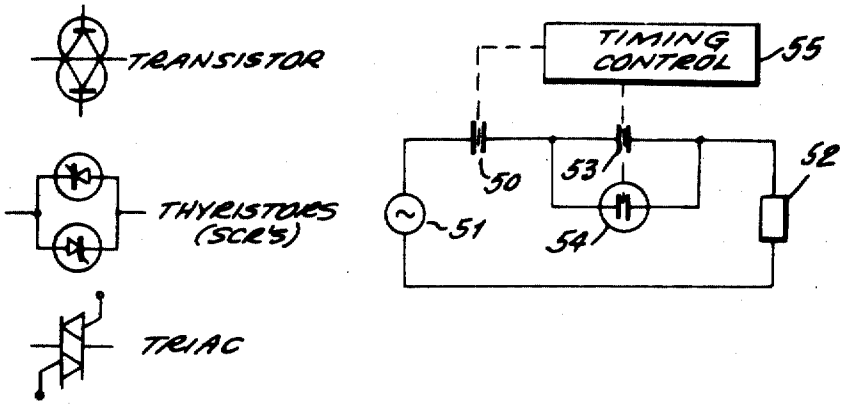

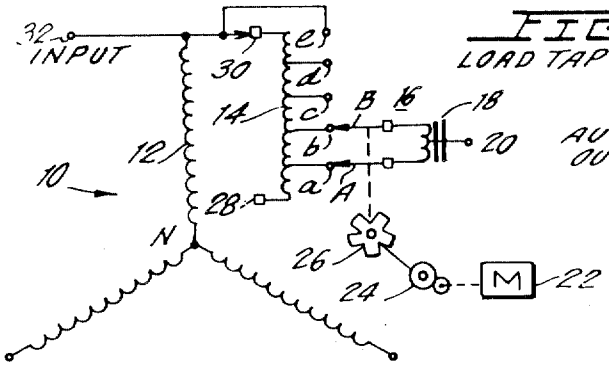

FIG. 1a.
LOAD TAP CHANGER

AUTOTR. OUTPUT

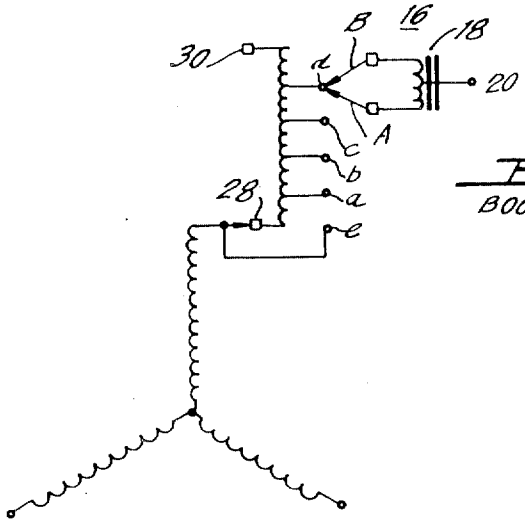

FIG. 1b.
BOOST POSITION

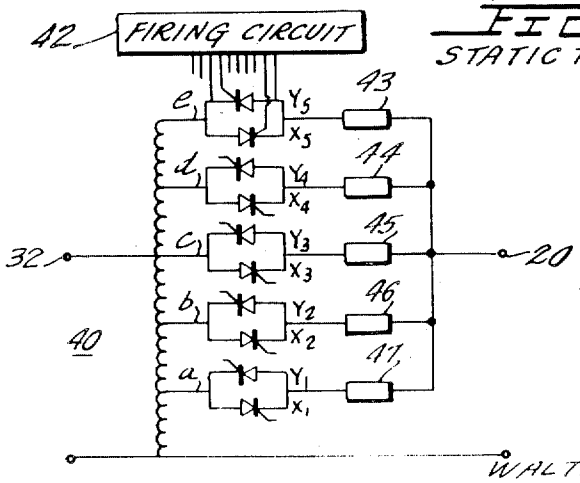

FIG. 2.
STATIC TAP CHANGER

INVENTOR
WALTER V. CHUMAKOV

BY

OSTROLENK, FABER, GERB & SOFFEN
ATTORNEYS

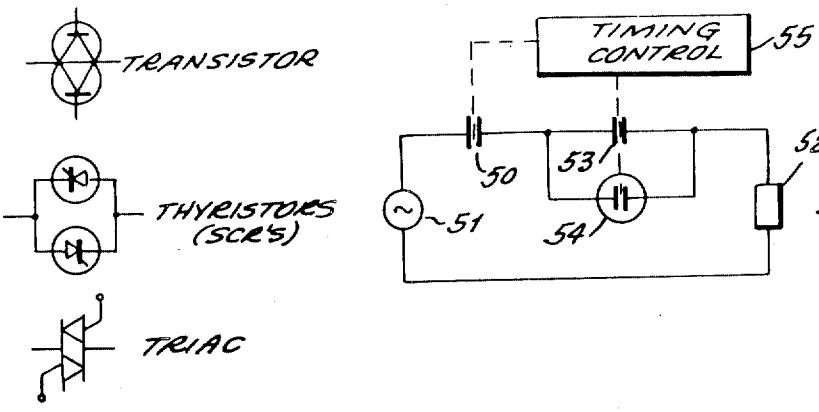

FIG. 3

CONDITION STATE	t_1 OFF	t_2	t_3	t_4 ON	t_5	t_6	t_7 OFF
SEMICOND SW 54			X	X	X		
MAIN SW. 50		X	X	X	X	X	
AUX SW. 53				X			

FIG. 3a.

X = SWITCH CLOSED

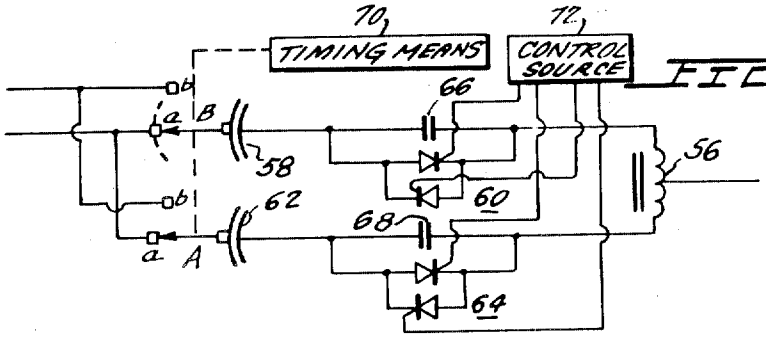

FIG. 4.

FIG. 4a.

CONDITION POSITION	t_1	t_2	t_3	t_4	t_5	t_6	t_7	t_8	t_9	t_{10}	t_{11}	t_{12}	t_{13}
SEMIC. SW. 60	X	X				X	X	X	X	X	X	X	X
SEMIC. SW 64	X	X	X	X	X	X	X	X				X	X
SW 66	X						X	X	X	X	X	X	X
SW 68	X	X	X	X	X	X	X						X
SW. A ON	a	a	a	a	a	a	a	a	a		b	b	b
SW. B ON	a	a	a		b	b	b	b	b	b	b	b	b

FIG. 5.

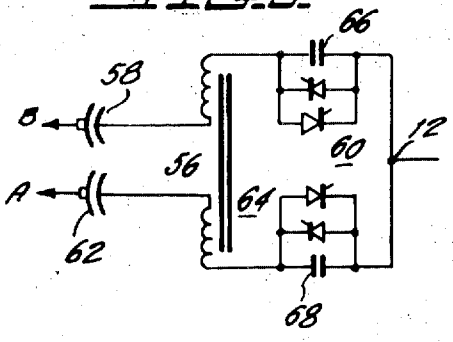

FIG. 6.

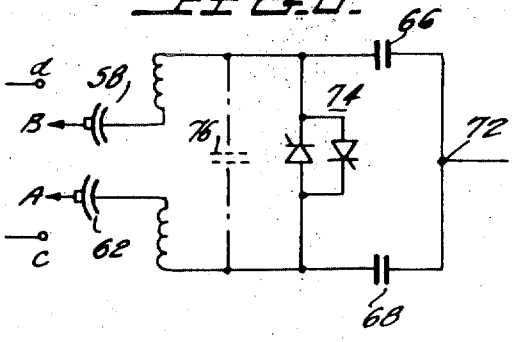

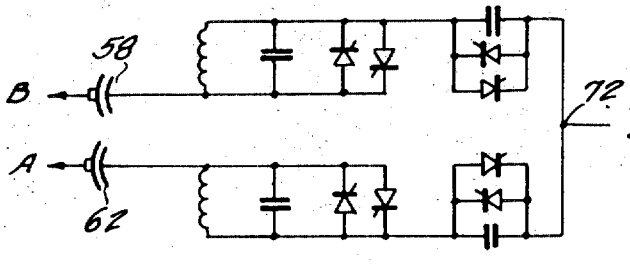

FIG. 7.

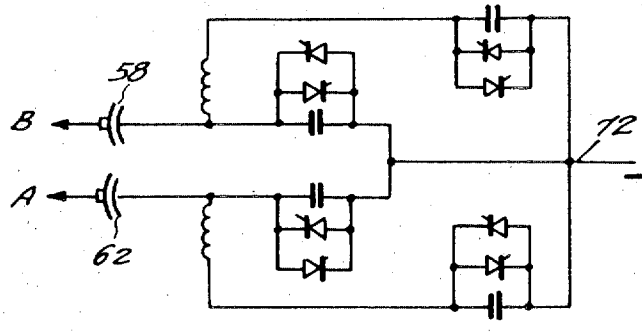

FIG. 8.

INVENTOR
WALTER V. CHUMAKOV

BY

OSTROLENK, FABER, GERB & SOFFEN

ATTORNEYS

FIG. 9a.

SW 76 & SCR 74 USED

POSITION	1								2								3								4								5
	F~								1/2~								F~								1/2~								F~
CONDITION	t_1	t_2	t_3	t_4	t_5	t_6	t_7	t_8	t_9	t_{10}	t_{11}	t_{12}	t_{13}	t_{14}	t_{15}	t_{16}	t_{17}	t_{18}	t_{19}	t_{20}	t_{21}	t_{22}	t_{23}	t_{24}	t_{25}	t_{26}	t_{27}	t_{28}	t_{29}	t_{30}	t_{31}	t_{32}	t_{33}
A ON	a	a	a	a	a	a	a	a	a	a	a	a		b	b	b	b	b	b	b	b	b	b	b	b	b	b	b		c	c	c	c
B ON	a	a	a	a		b	b	b	b	b	b	b	b	b	b	b	b	b	b	b		c	c	c	c	c	c	c	c	c	c	c	c
68	×	×	×	×	×	×	×	×	×								×	×	×	×	×	×	×	×	×								×
76	×	×						×	×	×						×	×	×						×	×	×						×	×
66	×								×	×	×	×	×	×	×	×	×								×	×	×	×	×	×	×	×	×
SCR 74	×	×	×				×	×	×	×	×				×	×	×	×	×				×	×	×	×	×				×	×	×

FIG. 9b.

ONLY SCR 74 USED

	1						2						3						4						5						6						7
	F~						1/2~						F~						1/2~						F~						1/2~						F~
A ON	a	a	a	a	a	a	a	a	a		b	b	b	b	b	b	b	b	b	b		c	c	c	c	c	c	c	c	c	c	c		d	d	d
B ON	a	a	a		b	b	b	b	b	b	b	b	b	b	b		c	c	c	c	c	c	c	c	c	c		d	d	d	d	d	d	d	d	d
68	×	×	×	×	×	×	×						×	×	×	×	×	×	×						×	×	×	×	×	×	×						×
SCR 74	×	×				×	×	×				×	×	×				×	×					×	×	×				×	×	×				×	×
66	×						×	×	×	×	×	×	×						×	×	×	×	×	×	×						×	×	×	×	×	×	×

ARCLESS TAP- OR SOURCE-SWITCHING APPARATUS USING SERIES-CONNECTED SEMICONDUCTORS

The present invention relates to electric power switching arrangements, in general, and to arcless tap-changing equipment employing semiconductor switching, in particular. As will become subsequently clear, the present invention discloses a modification of the arcless tap-changing equipment described in the copending application Ser. No. 818,331; filed concurrently herewith, and assigned to the same assignee as the instant invention.

In many electric relay-type devices, power switching is achieved by the making and breaking of metallic contacts. In the "make" or closed contact position, electric power loss and temperature rise at the contacts are relatively low. The contact material, its resistance, and its cooling surface area are selected so that the temperature rise and erosion of the material during the "make" condition are kept within prescribed limits.

However, severe problems of erosion occur in going from the "make" to the "break" or open contact condition, and vice versa. In particular, the interruption of electric power in going from the "make" to the "break" condition usually causes arcing, contact material transfer from one surface to the other or evaporation, and an overall general deterioration of the contact surfaces. The contact evaporation or deterioration that takes place usually continues until the arc itself is extinguished and the temperature between the contact surfaces decreases below a certain value.

Arcing, and the problems it cause, can also take place prior to the closing of the contact surfaces, i.e., in going from the "-break" to the "make" condition. Localized hotspots can be created to cause the erosion, which also may be caused by localized increase in the contact current density immediately after the "make" transition.

These problems are especially acute in high-power electrical source and tap-changing equipment because of the desirability for a number of reasons to keep the mass and the size of the switches to a minimum, while obtaining maximum useful life of the contact structure. These problems are particularly severe during the interruption of highly inductive loads due to circuit voltage buildup, elongation of the arc, and the possibility of the arc restriking between the contact surfaces as they separate.

It is an object of the present invention, therefore, to provide switching arrangements for tap- or source-changing equipment and the like which cause little or no erosion or deterioration of metallic contact switches.

It is a further object of the invention to provide such arrangements in a manner to prevent arcing in both the "-making" and "breaking" of electrical switches.

As will become clear hereinafter, arcless switching arrangements according to the invention employ semiconductor switching means in combination with the metallic contact switching means of the type described above. In one embodiment of the invention a main contact designed for continuous current-carrying duty is connected in series with a semiconductor switch to couple a source of electric power to a load. An auxiliary or intermittent duty contact is connected in parallel with the semiconductor switch and arranged to short circuit the switch when the apparatus is in the normal current-carrying condition.

As will also become apparent, this embodiment combines numerous advantages of metallic contact switching arrangements and semiconductor switching arrangements, while at the same time avoiding many disadvantages associated with switching means of purely one type or the other.

A mechanically or electrically operable control source serves to close the semiconductor switch after the main contact closes or engages and to open the semiconductor switch before the main contact opens or disengages.

Other objects and advantages of the present invention will be more clearly understood from a consideration of the following description of the apparatus of the invention taken in connection with the drawings, in which:

FIG. 1*a* and 1*b* show a commonly used tap-changing arrangement illustrating the problems caused by arcing;

FIG. 2 is a suggested tap-changing arrangement utilizing purely semiconductor switching;

FIG. 3 shows one embodiment of arcless tap-changing equipment constructed in accordance with the principles of the present invention;

FIG. 3*a* shows a switching diagram useful in understanding of the arcless tap-changing equipment of FIG. 3;

FIG. 4 shows another embodiment of arcless tap-changing equipment according to the invention;

FIG. 4*a* shows a switching diagram useful in an understanding of the equipment of FIG. 4;

FIGS. 5–8 show other embodiments of the arcless tap-changing equipment; and

FIGS. 9*a* and 9*b* show switching diagrams illustrating the operation of the equipment of FIG. 6. Referring now more particularly to the tap-changing equipment of FIGS. 1*a* and 1*b*, the arrangement there shown includes a three-phase autotransformer **10**, having an exciting winding **12** and a series winding **14**. A series of taps or terminals *a–e* are shown on the series winding **14** and are contacted by a multiposition tap selector switch or tap changer **16**. Only one phase of the tap selector **16** is shown for the purpose of simplicity, with its contacts A and B being connected to taps *a*, *b* at a location which is one step before the minimum system output condition in this buck position. As is well known, the movement of the contacts A and B proceed, for example, from tap *a* to tap *b*, then from tap *b* to tap *c*, etc. As is also well known, in going from one tap to another —such as from tap *a* to tap *b* —a point is reached prior to reaching the intended tap at which the output voltage corresponds essentially to the midpoint voltage between the two.

The contacts A and B are also connected, as shown, through a switching reactor or preventive center top transformer **18** which permits commutation of load current in the transformer from one tap to another without the complete interruption and excessive circulating current between taps. An output terminal **20** is connected to the midpoint of the transformer **18** and is connected to various utilization circuits (not shown). The tap selector **16** is operated to move from one position to another by a reversible motor **22** and a suitable drive or gear arrangement **24**.

In order to reduce arcing and contact erosion in the tap-changing arrangement, an intermittent motion means such as a Geneva gear arrangement **26** is normally used in the drive mechanism. Such usage also provides for better positioning of the tap selector **16** and also provides for a relatively fast snap action when the switch contacts A and B are moved from one tap position to another.

The arrangement of FIG. **1** may also contain separately actuated reversing switches **28** and **30** for reversing the connection of the series winding **14** with respect to the exciting winding **12** when the selector switch contacts A and B reach the tap *e*. Such reversing switches serve to effectively double the control range of the equipment since the tap selector **16** could again be actuated a given number of times until the maximum boost position of FIG. 1*b* is reached.

The illustrated tap-changing equipment of FIGS. **1** and 1*b* has several distinct advantages and disadvantages. Among its advantages are: (1) the ability to handle electric power at thousands of volts and amperes at high efficiency and with little power loss; (2) a relatively high short circuit and overload current capability; (3) a moderate cost of contact surface replacement; and (4) proven industrial application. Among its disadvantages are: (1) its tendency to arc; (2) its large mass and limited useful life resulting from contact wear; (3) its high initial and maintenance cost; and (4) its limited speed of switching.

The switching mechanisms of the arrangement of FIG. **1**, in addition, are quite complex and, as noted, require careful maintenance. In operation, the switches are normally immersed in some insulating liquid (such as oil) to reduce the effects of arcing and to achieve sufficient insulation or contact

surface cooling. The arcing products, though, may lead to deterioration of the insulating properties and may very well result in flashover, especially if the number of switch operations per unit of time is high.

FIG. 2 shows tap-changing equipment in which all the mechanically operated parts associated with the arrangement of FIG. 1 are replaced by controllable semiconductor switching devices —such as silicon-controlled rectifiers and transistors. As is well known, these devices can be brought to a conducting (or low forward resistance) condition by application of suitable signals to their respective control terminals. When the control signal is absent, on the other hand, the semiconductor device will revert to a nonconducting (or high reverse resistance) condition, thus, effectively blocking or interrupting the main power flow from the input terminal **32** to the output terminal **20**.

The autotransformer of FIG. 2 is again shown as having five taps *a–e*. The arrangement further shows inverse—parallel connected silicon-controlled rectifier pairs *x–y* connected between the respective taps and the output terminal **20**. Suitable control circuits **42** are shown connected with the gate electrode of the individual devices to provide control selection of the *x–y* pair which is to be activated to establish the connection between an individual one of the taps *a–e* and the utilization circuits connected to the output terminal **20**. Current limiting impedances **43–47** are similarly illustrated to prevent short circuit currents from flowing between various ones of the taps *a–e* during switching from one *x–y* pair to another. A pair of oppositely poled rectifiers are included in each *x–Y* pair to enable connection to terminal **20** of both the positive and negative portions of the alternating current signal applied to input terminal **32**.

The arrangement of FIG. 2 offers the following advantages when compared with the arrangement shown in FIG. 1: (1) it is completely static, having no movable parts, and exhibits a switching speed in the order of microseconds; (2) power interruption and initiation occurs at the semiconductor junction of the devices and causes no surface material erosion or deterioration; (3) the speed of response is determined by the external utilization circuit, and operation is relatively noiseless; and (4) the arrangement is one requiring little or no maintenance. Also, it will be noted that the arrangement of FIG. 2 is one in which no arcing problems are created and in which convection and forced air cooling —rather than one using and insulating liquid medium —is possible.

Among the disadvantages of the FIG. 2 arrangement, however, are: (1) the requirement of the large number of semiconductors of high power handling capability, although only one of them carries power at any given time; (2) its high initial cost and high cost of semiconductor replacement; (3) the requirement for expensive control circuits for the individual devices; and (4) the relatively high power loss associated with the arrangement as compared with that for the moving contact apparatus.

Thus, it will be apparent that both the metallic contact and semiconductor tap switching schemes offer both advantages and disadvantages. These same advantages and disadvantages are present when the scheme is employed to switch power sources, rather than electrical taps, to a load. As will become clear below, tap- or source-changing equipment according to the present invention combines many advantages of the two switching equipment arrangement with but few of their disadvantages.

Referring now to FIG. 3, the apparatus there shown illustrates one embodiment of the present invention for coupling an electric power source to a load; in part, by a metallic contact, but in a manner in which arcing is eliminated by the use of semiconductor switching. The principles of this and the other apparatus described herein apply equally as well to source-changing equipments as to tap-changing equipments. Thus, the terms "source," "power source," etc. as used herein may be used interchangeably with the term "tap."

The apparatus of FIG. 3 includes a main metallic contact **50** and a semiconductor switch **54** serially connected between the electric power source **51** and an external load **52**. An auxiliary contact **53** is shown connected across the semiconductor switch **54**. A timing control means **55** is included and is effective to control the conductive condition of the contacts **50** and **53** and of the switch **54**, as indicated by the dotted lines. The semiconductor switch **54** in this and subsequently described embodiments of the present invention may, for a alternating current of one source, comprise a pair of transistors with the emitter of one connected to the collector of the other as illustrated along side FIG. 3. Alternatively, the semiconductor switch **54** may comprise a pair of oppositely poled, parallel-connected silicon-controlled rectifiers. Thirdly, a triac may be employed for the switch **54** in yet another modification These latter two arrangements are also illustrated alongside FIG. 3. For a direct current power source only one of these transistors or silicon-controlled rectifiers need be employed.

Basic to the operation of the apparatus shown in FIG. 3 is the requirement that the semiconductors switch **54** be in its open or nonconducting condition prior to the "making" or "-breaking" of the main contact **50**. Also basic to the operation of the apparatus shown in FIG. 3 is the requirement that the auxiliary contact **53** be closed after the closing of the switch **54** and be opened prior to the opening of that switch. Thus, the initiation of current flow from the source **51** to the load **52** will occur in the semiconductor switch **54**. Similarly, the interruption of the current flow will also occur in the switch **54**, wit the overall result being that little or not arcing will take place across the main contact **50**. This results from the fact that the voltage drop across the semiconductor switch **54** at the point of current initiation or current interruption is primarily controlled by the material employed for the switch **54**, and can be kept to a relatively low 1 or 2 volt value. That value is insufficient to cause significant arcing of the contact **50** during its closing and opening.

The timing control means **55** may be of the type which is effective to couple actuation control signals to either of the contacts **50** and **53** or the semiconductor switch **54**, and to couple them in any desired or preselected manner. FIG. 3*a* illustrates a switching diagram showing the timed sequence of control signals supplied by the timing means **55** to the apparatus of FIG. 3. FIG. 3*a*, for example, illustrate the switching sequence wherein the main contact **50**, the auxiliary contact **53** and the semiconductor switch **54** are closed during the ON state of the apparatus, wherein the power source **51** is connected to the load **52**. FIG. 3*a* also illustrates the switching sequence wherein the contacts **50** and **53** and the semiconductor switch **54** are all open during the OFF state of the apparatus, wherein the power source **51** is disconnected from the load **52**.

Considering the diagram of FIG. 3*a* in some detail, it will be seen that the control signals supplied by the timing means **55** establishes the following t_1–t_7 timing sequence: (1) at time t_1, no signal applied and all contacts and switches open; (2) at time t_2, a first signal applied to close main contact **50**; (3) a second signal applied at time t_3 to close semiconductor switch **54**, thereby connecting the power source **51** to the load **52** to produce a voltage thereacross equal to that of the source; (4) a third signal applied at time t_4 to close the auxiliary contact **53**, thereby bypassing the semiconductor switch **54** and establishing the connection from the power source **51** to the load **52** by means of the contacts **50** and **53**; (γ) at time t_5, a fourth signal applied to open the auxiliary contact **53**; (6) a fifth signal applied at time t_6 to open the semiconductor switch **54**, thereby disconnecting the power source **51** from the load **52**; and (7) at time t_7, a sixth signal applied to open the main contact **50**. The condition where the main contact **50**, the auxiliary contact **53** and the semiconductor switch **54** are all closed (t_4) constitutes the ON or "make" condition of the apparatus. The condition where all contacts and switches are open (t_1, t_7) constitutes the OFF or "break" condition of the apparatus.

It will thus be noted that the sequence in going from the OFF or "break" condition of the apparatus to the ON or "-make" condition requires the main contact **50** to close before the semiconductor switch **54** and the auxiliary contact **53** are closed. The semiconductor switch **54** is closed after the main contact **50** closes and remains closed while the auxiliary contact **53** is closed. As an alternate operation, the semiconductor switch **54** could be opened after the auxiliary contact **53** closes, since that auxiliary contact **53** serves to bypass the semiconductor switch **54** in any event.

It will also be noted that the sequence in going from the ON or "make" condition to the OFF or "break" condition is to open the semiconductor switch **54** before the main contact **50** opens. The auxiliary contact **53** in this respect operates to open as well before the main contact **50** opens and, particularly, before the semiconductor switch **54** opens.

It will further be noted that the apparatus of FIG. 3 can be controlled to operate by the application of timing control signals from the control means **55** as well as by the absence of signals from the timing means **55**. Thus, a signal supplied at time t_5 in the t_1–t_7 sequence can serve to open the auxiliary contact **53** as well as the absence of a signal supplied to the contact **53** at that time.

Referring now to FIG. 4, the apparatus there shown is intended for use in tap-changing equipment, but could also be used in switching electric power sources and loads. Two pairs of interconnected taps *a*—*a* and *b*—*b* are shown along with two contact arms A and B. The contact arm B is connected to a center-tapped output transformer **56** by means of a sliding contact **58** and a semiconductor switch **60** connected in series, while the contact arm A is similarly connected to the transformer **56** by means of a sliding contact **62** and a semiconductor switch **64**. A pair of auxiliary contacts **66** and **68** are included, with the contact **66** connected across the semiconductor switch **60** and with the contact **68** connected across the semiconductor switch **64**.

As indicated, the semiconductor switches **60** and **64** each comprise a pair of oppositely poled, parallel-connected silicon-controlled rectifiers, though in alternative arrangements the semiconductor switches may be composed of the transistor or triac arrangements illustrated alongside FIG. 3. A timing means **70** is further included and serves to rotate the contact arms A and B from the positions shown to controllably open and close the main contact arms A and B as well as, by a mechanical linkage, to open and close the auxiliary contacts **66** and **68** of the apparatus. The timing means **70** also serves to control the generation of signals in a control source **72**; which signals in turn are coupled to the gate electrodes of the individual silicon-controlled rectifier devices to open and close the switches **60** and **64** in response to the indication of the timing sequence.

Considering the switching sequence diagram in FIG. 4*a*, it will be seen that at time t_1, the auxiliary contacts **66** and **68** and the switches **60** and **64** are all closed. The contact arms A and B are similarly connected to the equipotential taps *a*—*a*. At time t_2, the timing means **70** serves to open the auxiliary contact **66** while at time t_3, the timing means **70** and control source **72** cooperate in opening the semiconductor switch **60**. At time t_4 in this equipment, the contact arm B is controlled by the timing means **70** to move from the upper tap *a* to the upper tap *b* reaching that point at time t_5.

At time t_6, the timing means **70** and control source **72** cooperate once again, but this time to close the semiconductor switch **60**, while at time t_7, the timing means **70** serves to close the auxiliary contact **66**. Thus, the timing sequence ($_1$–t_4 corresponds to the "breaking" of the apparatus described in FIG. 3 while the sequence t_4–t_7 corresponds to the "making" of the connections as described therein. During the interval t_1–t_2, the upper tap *a* is connected to the output transformer **56** and during the interval t_5–$t_7$the upper tap *a* is disconnected from the transformer **56**. During this latter interval, however, the upper tap *b* is connected to the transformer **56** by means of the main contact **58**, the auxiliary contact **66** and the semiconductor switch **60**.

A similar operation results with respect to the main contact arm A. Thus, at time t_8, the timing means **70** serves to open the auxiliary contact **68** while at time t_9, the timing means **70** and control source **72** cooperate to open the semiconductor switch **64**. At time t_{10}, the contact arm A moves under the direction of the timing means **70** from lower tap *a* to lower tap *b* to open the main contact **62**. At time t_{11}, the moving contact A has reached the lower tap *b*. At time t_{12}, the timing means **70** and control source **72** once again serve to close the auxiliary switch **64**, thereby connecting the lower tap *b* to the transformer **56** by way of the sliding contact **62** and the switch **64**. And, at the time t_{13}, the timing means **70** serves to close the auxiliary contact **68** to bypass the semiconductor switch **64** in this condition.

(In this respect it will be understood that the upper and lower taps *a* may comprise a single tap, as shown for example in FIG. 9. Similarly the upper and lower taps *b* may comprise a single tap. A pair of such taps are indicated in FIG. 4 to illustrate the equal applicability of the present invention to both of the known types of tap-changing equipment utilizing either one-piece or two-piece taps in their respective constructions.) It will be noted also that although magnetic coupling is shown between upper and lower windings of device **56**, uncoupled windings, reactors or current-limiting impedances can be used. The basic principle of switch operation and protection, however, will remain essentially the same.

Thus, whether one considers the contact arm B or the contact arm A of the arrangement of FIG 4, it will be readily apparent that the timing sequence in each such case is to close the main contact, close the semiconductor switch, close the auxiliary contact, open the auxiliary contact, open the semiconductor switch and open the main contract. Since current initiation and current interruption are governed in both of these instances by the respective closing and opening of the semiconductor switch, it will be seen that no arcing problems are developed across the main contacts or, even across the auxiliary contacts. The function of the auxiliary contacts **66** and **68** in FIG. 4 is similar to that provided by the contact **53** in FIG. 3 —namely, to bypass and thereby protect the semiconductor switch under the condition at which the load is connected either to the electric power source in the one instance or to the tap at which exists exists electric power in the second instance.

The tap-changing equipment illustrated in FIGS. 5–8 show alternative arrangements of tap-changing equipment in accordance with the invention. For the sake of simplicity, the timing control means, or the combination of the timing control means and the control signal source, which effects the opening and closing of the contacts and switches employed have been omitted. In FIG. 5 the output transformer **56** of FIG. 4 has been transferred to the input circuit of the apparatus with all other notations being the same as in that drawing. The connection from the contact arm (A or B) to the output point (in this instance terminal **72**) is by means of the sliding contact and the auxiliary contact which bypasses the respective semiconductor switch.

In FIG. 6, the apparatus shown modifies that previously described in that a single semiconductor switch is utilized both for the operation of the contact arm A as well as for the contact arm B. This effects a savings of one semiconductor switch over the previously described arrangements, and operates in the same exact manner provided one of the auxiliary contacts **66** or **68** is maintained in its closed position during control of the contact arm and auxiliary contact in the other leg. A typical operation may be as follows:

a. At time t_1, the auxiliary contact **68** will be in its closed position as well as contact arm A–**62**;

b. At time t_2, the contact arm B moves from its tap *c* position to its tap *d* position, thereby closing the main contact:

C. At time t_3, the semiconductor switch **74** is closed thereby initiating load current flow from the contact arm B to the terminal **72** through the sliding contacts **58**, the upper winding and the semiconductor switch **74**;

d. At time t_4, the auxiliary contact **66** is closed, thereby providing the direct closed circuit path from the contact arm B to the output terminal **72**, while at the same time, forming a bypass circuit for the semiconductor switch **74** with the auxiliary contact **68**.

The sequence in going from the ON condition to the OFF condition of the upper branch is exactly the reverse:

a. Opening the auxiliary contact **66**;

b. Opening the semiconductor switch **74** to interrupt any current flow in the upper branch of the apparatus; and

c. Opening the main contact as by moving the contact arm B from tap *d* to some other tap.

The operation for the circuitry including the contact arm A is basically the same with the modification that there the auxiliary contact **66** is maintained closed for all operations of that circuit and the auxiliary contact **68** is opened and closed in a predetermined sequence to effect the coupling to and decoupling from the output terminal **72**.

A third auxiliary contact **76** is shown in dotted lines and may be connected across the semiconductor switch **74** and controlled to bypass that switch when the apparatus is in its ON condition. In this manner, the semiconductor switch **74** can more easily be bypassed under timing sequence control than is possible using the auxiliary contacts **66** and **68**.

The apparatus of FIGS. **7** and **8** show further embodiments of the invention. The FIG. **7** apparatus, in particular, combines an arrangement of the type described in FIG. **6** with the arrangement of FIG. **5** with an additional provision to short circuit current-limiting impedances when both arms are on the same tap. This additional provision will reduce voltage drop in the apparatus and, hence, power or voltage losses. The apparatus of FIG. **8** shows a combined arrangement using two sets of coupling arrangements connected in a modified manner and also could be used to short circuit the current-limiting impedances at certain tap positions.

The timing sequences for these arrangements can be such as to activate the upper rightmost semiconductor switch in the opening and closing of the main contact **58** and, then the leftmost upper semiconductor switch in the next sequence. Then the rightmost lower switch can be brought into play with the main contact **62** and then the leftmost lower semiconductor switch. The precise switching diagram illustrating the operation of these apparatus will be readily apparent to one skilled in the art. In employing the FIG. **7** apparatus, however, it must be remembered that operation of the parallel-connected semiconductor switch in the leftmost portion requires the maintaining of the auxiliary contact in the rightmost portion in the other branch to be closed in much the same manner as described with respect to FIG. **6**. As indicated in FIG. **7**, the bypass auxiliary contact is included to further improve the bypass operation of the semiconductor switch during the time at which current is flowing from the contact arm to the output terminal.

FIG. **9***a* shows a switching sequence diagram when apparatus of the type shown in FIG. **6** is employed. It will be understood in this switching diagram that the bypass contact **76** of that apparatus is included. It will be seen from this switching diagram that the basic sequence is the same as the sequences described with respect to the other FIGS. of the drawings. Namely, in "making" the connection, the main contact is first closed (t_6), then the semiconductor switch (t_7), then the bypass contact (t_8) and lastly the contact completing the circuit from the tap to the output terminal (t_9). It will also be seen that in this parallel arrangement of the semiconductor switch, the auxiliary contact in the branch not connected between the tap and the output point is maintained closed during this operation i.e., the auxiliary contact **68**. In "brekaing" the connection, the sequence is the reverse.

FIG. **9***b* shows the switching diagram for the instance in which the bypass contact **76** is omitted. Here, too, it will be seen that the sequence is to close the main contact (t_5), close the semiconductor switch (t_6), and close the auxiliary contact connecting the tap to the output terminal while the auxiliary contact in the other branch is closed (t_7). Again, in "-breaking" the connection, the sequence is reversed.

In all these arrangements of FIGS. **5–8**, it should be noted that the initiation of current flow from the tap is upon the closing of the semiconductor switch —whether the current flow be from the main contact arm directly to the output terminal (as in FIG. **5**) or from the contact arm of one branch to the contact arm circuit of the other branch (as shown in FIG. **6**). Also, it should be noted that the interruption of current occurs upon the opening of the semiconductor switch in all of these arrangements. All of these arrangements will therefore serve to prevent arcing across the main contacts of the described equipment when connected in the manner shown in the respective drawings.

As was previously mentioned, the combination of the metallic contact switching arrangement and the semiconductor switching arrangement as illustrated in the foregoing FIGS. offer a number of advantages over the purely metallic contact or semiconductor switching arrangements. Some of these are as follows:

1. Arcing is eliminated, and in a manner which permits convection or forced air cooling of a contact surface. 2. The resulting wear of the contact is largely mechanical in nature, thereby reducing the need for contact maintenance while at the same time increasing the useful life of the contact appreciably. In addition, it no longer is necessary for the contact material to be arc resistant, enabling the material to be selected on the basis of best wear and conductivity. 3. Physical size and mass of the contact can be reduced, and the operating mechanism simplified thus permitting higher speed of switching or control. 4. Few power semiconductors are needed, with the utilization factor of them being high. At the same time, the semiconductor devices are not subjected to voltage or current stresses in those instances in which the semiconductor is not in service when the main contact is engaged to couple the source of power to a load. This increases reliability and the life of the semiconductors employed. 5. Service between the source and the load can be maintained even if the semiconductor devices fail. It is also possible in this respect to replace the semiconductors while maintaining service, merely by freezing the main contact in place and operating a semiconductor disconnect switch.

While the foregoing arrangements have been described in an environment in which the power source was an alternating current source and where the tap employed was to connect an alternating current source to a load, the principles of the present invention can also be applied for switching of direct current sources. In such case it is only necessary to employ one instead of the two cooperating semiconductor devices shown in the drawings. The polarity of the device employed and its manner of the connection within the apparatus will, of course, depend upon whether the source is a positive voltage source or negative voltage source. In the special case of silicon-control rectifier devices furthermore, special commutating circuits known to those in the art would be necessitated in order to negate the load current flowing to allow the rectifier device to recover its blocking ability.

The embodiments of the invention is which an exclusive privilege or property is claimed are defined as follows:

1. Electric power switching apparatus comprising:

input circuit means;

output circuit means;

first mechanical switching means having a pair of metallic contacts, one of which is coupled to said input circuit means and both of which are subject to arcing, erosion, deterioration and the like if said contacts are initially engaged to couple said input and output circuit and if said contacts are initially disengaged to decouple said input and output circuit means;

second mechanical switching means, also having a pair of metallic contacts, serially coupled between the other of said pair of first mechanical switching means metallic contacts and said output circuit means;

semiconductor switching means coupled in parallel across said second meachanical switching means; and

timing control means for closing said semiconductor switching means after closing of said first mechanical switching means by said control means and prior to closing of said second mechanical switching means by said control means to thereby effect current initiation between said input and output circuit means through said semiconductor switching means and for opening said semiconductor switching means after opening of said second mechanical switching means by said control means and prior to opening of said first mechanical switching means by said control means to thereby effect current interruption between said input and output circuits means across said semiconductor switching means;

whereby said arcing, erosion, deterioration and the like is substantially lessened.

2. Electric power switching apparatus as defined in claim 1, wherein said timing control means is included for opening said semiconductor switching means after closing of said second mechanical switching means by said control means and prior to opening of said first mechanical switching means by said control means.

3. Electric power switching apparatus as defined in claim 1, wherein said timing control means includes a source of control signals for said semiconductor switching means and mechanical linkage means operative to open and close said first and second mechanical switching means and to condition the application of control signals to said semiconductor switching means, all in a predetermined time sequence.

4. Electric power switching apparatus as defined in claim 1, wherein said input circuit means comprises a source of direct current, wherein said semiconductor switching means includes one of a group consisting of a transistor, a silicon-controlled rectifier, a triac and similar conductivity controllable semiconductor devices and wherein said timing control means is operative to close said switching means by coupling appropriate signals to a control electrode of the one of the semiconductor devices included.

5. Electric power switching apparatus as defined in claim 1, wherein said input circuit means comprises a source of alternating current, wherein said semiconductor switching means includes at least one of a group consisting of a transistor, a silicon-controlled rectifier, a triac and similar conductivity controllable semiconductor device and wherein said timing control means is operative to close said switching means by coupling appropriate signals to a control electrode of each of the semiconductor devices included to condition said devices to conduct for both positive and negative cycles of an alternating current waveform.

6. Electric power switching apparatus as defined in claim 1, wherein said input circuit means consists of one of an electric power generating source and a terminal at which electric power is provided and wherein said output circuit means includes a load therefor.

7. The combination comprising:

a plurality of taps at which electric power is provided;

a load;

first mechanical switching means having a contact arm connected to one of the plurality of said taps and having a pair of metallic contacts, one of which is coupled to said contact arm and both of which are subject to arcing, erosion, deterioration and the like if said contacts are initially engaged to couple said taps and said load means and if said contacts are initially disengaged to decouple said taps and said load;

second mechanical switching means, also having a pair of metallic contacts, serially coupled between the other of said pair of first mechanical switching means metallic contacts an said load;

semiconductor switching means coupled in parallel across said second mechanical switching means; and

timing control means for closing said semiconductor switching means after closing of said first mechanical switching means by said control means and prior to closing of said second mechanical switching means by said control means to thereby effect current initiation between said taps and said load through said semiconductor switching means and for opening said semiconductor switching means after opening of said second mechanical switching means by said control means and prior to opening of said first mechanical switching means by said control means to thereby effect current interruption between said taps and said load across said semiconductor switching means;

whereby said arcing, erosion, deterioration and the like is substantially lessened.

8. The combination as defined in claim 7, wherein said timing control means is included for opening said semiconductor switching means after opening of said second mechanical switching means by said control means and prior to opening of said first mechanical switching means by said control means.

9. The combination as defined in claim 8, wherein said timing control means is included for moving the contact arm of said first mechanical switching means from one of the plurality of said taps to another of the plurality of said taps, and to thereby effect closing of said first mechanical switching means metallic contacts.

10. Electric power switching apparatus as defined in claim 5 wherein said output circuit means includes a center tapped transformer.

11. The combination as defined in claim 9 wherein said load includes a center-tapped transformer.